Luckylight

Optoelectronic Components

Lucky Light Electronics Co., Ltd.

2023-2024

◆ Excellence ◆ Innovation ◆ Integrity ◆ Quality

公司簡介

佳光電子有限公司是專業從事研發、生產、銷售 LED 光電器件的高新技術企業。

佳光在中國擁有三個生產工廠，擁有高素質（本科學歷占 20%）與穩定（5 年以上年資占 80%）的優秀幹部，近30年的研發與生產實力，在客戶與供應商的鼎力支持下，讓公司在日益競爭的環境中奠定永續經營的基礎。

我們的產品廣泛應用於電腦周邊、消費電子、家用電器，IT 通訊、汽車、照明、工業自動控制感應及各種光源應用，產品得到全球各地客戶的認可。佳光擁有全系列的光電元器件產品線，主要包括白光 LEDs，高功率 LEDs、SMD LEDs、直插型 LED、數碼管、背光源及紅外線產品等,且被業界認可是光電器件解決方案的專業供應商。

佳光一直以高標準的品質政策導向完成各項認證，品質類認證 ISO9001，汽車類有 IATF16949，環境類有 ISO14001，同時導入 RoHS 和 REACH 系統管理。

佳光憑藉其專業的封裝設計和先進的製造經驗，不僅能夠為客戶提供高品質的光電器件的解決方案，而且一直在追求高性能和低污染的光源作為目標。

Company Profile

Luckylight Electronics Co., Ltd is a professional LED manufacturer and supplier, which specializes in R&D, producing and selling LED products.

Luckylight people are highly educated with 20% advanced degrees and experienced (80% of managers with more than 5 years of service). Our 30 years of experience in LED design and manufacturing, with support from our loyal customers and suppliers, form the foundation of our competitive strength.

Our products are widely used for applications ranging from computers, consumer electronics, automotive, lighting, and many other purposes. Luckylight provides a diverse product portfolio consisting of High Power LEDs, SMD Chip LEDs, Through Hole Lamp, Lighting Components, LED Lighting Modules, Digital Displays, backlighting module and Infrared Components for various applications. The Luckylight brand is trusted by customers world-wide as a world-class manufacturer of LEDs.

Luckylight maintains the highest quality standards, recognized with ISO9001 quality, IATF16949 automotive, and ISO14001 environmental certifications, RoHS, REACH system certification.

Building on its professional packaging designs and sophisticated manufacturing experiences, Luckylight not only has been able to provide customers with high-quality LED components solutions, but also has been constantly pursuing for high performance and low-pollutant light sources as the major goal.

INDEX

SMD LED

Through-hole LED

Lighting LED

LED Display

LED Backlight

SMD LED Display

Infrared Devices

Application Notes

Part Number	Chip Material	Emitting Color	λp (nm) / x	λd (nm) / y	Lens Color	VF (V)		IV (mcd)			Viewing Angle
						Typ.	Max.	IF=mA	Min.	Typ.	2θ ½

3.20mm×1.60mm×1.10mm (1206) Single Color Chip LED

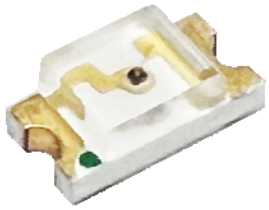

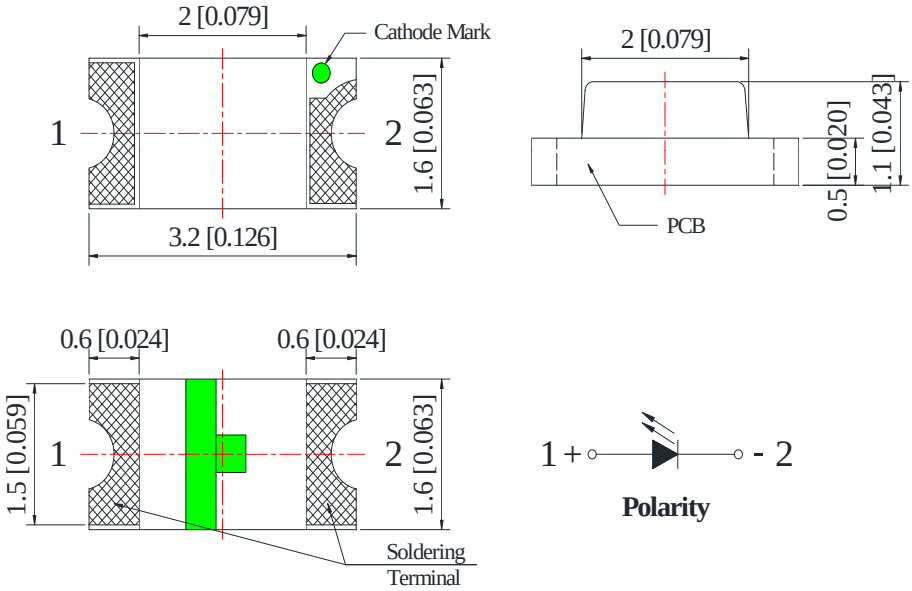

S150VC-2BS	AlGaInP	Super Bright Red	632	624	Water Clear	2.00	2.40	20	100	150	120
S150AC-2BS	AlGaInP	Super Bright Orange	610	605		2.00	2.40		100	150	
S150YC-2BS	AlGaInP	Super Bright Yellow	592	590		2.00	2.40		100	150	
S150GC-2BS	AlGaInP	Yellow Green	575	573		2.00	2.40		40	80	
S150PGC-G5-1BS	InGaN	Pure Green	520	525		3.20	3.60		300	600	
S150BC-B4-1BS	InGaN	Blue	468	470		3.20	3.60		80	120	

2.00mm×1.25mm×1.10mm (0805) Single Color Chip LED

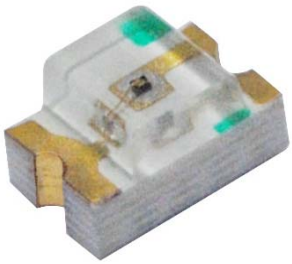

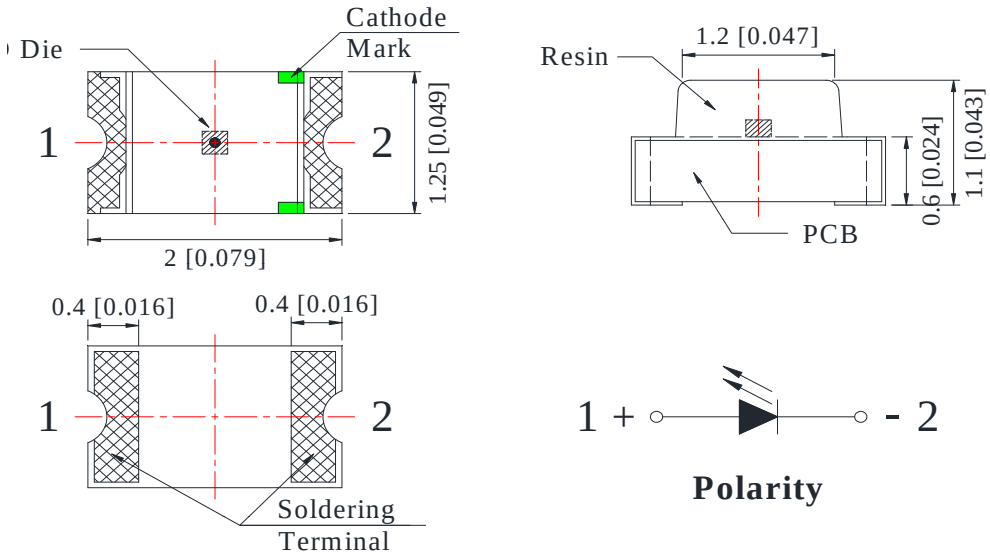

S170VC-1BG	AlGaInP	Super Bright Red	632	624	Water Clear	2.00	2.40	20	70	115	120
S170AC-1BG	AlGaInP	Super Bright Orange	610	605		2.00	2.40		100	150	
S170YC-1BG	AlGaInP	Super Bright Yellow	592	590		2.00	2.40		80	120	
S170GC-1BG	AlGaInP	Yellow Green	575	573		2.00	2.40		20	40	
S170PGC-G5-1AG	InGaN	Pure Green	520	525		3.20	3.60		300	600	
S170BC-B4-1AG	InGaN	Blue	468	470		3.20	3.60		100	160	

Part Number	Chip Material	Emitting Color	λp (nm) / x	λd (nm) / y	Lens Color	VF (V)		IV (mcd)			Viewing Angle
						Typ.	Max.	IF=mA	Min.	Typ.	2θ ½

1.60mm×0.80mm×0.60mm (0603) Single Color Chip LED

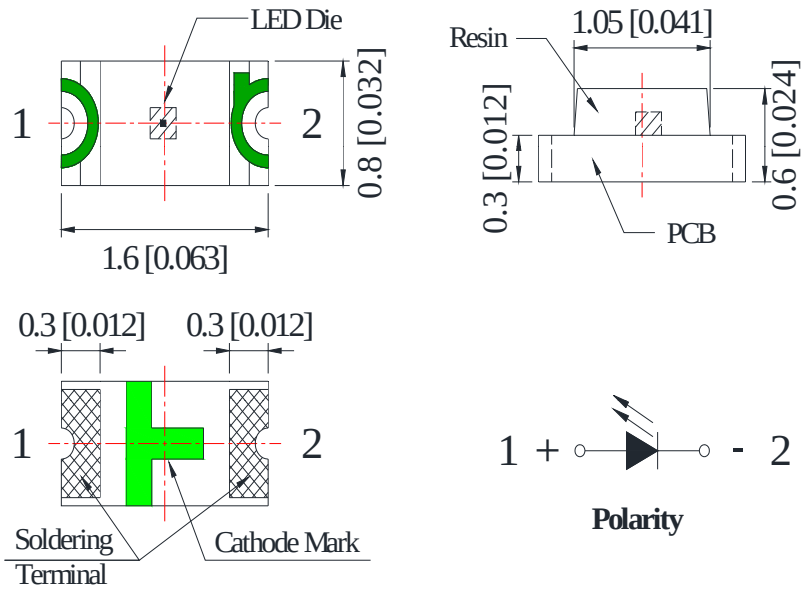

S192VC-2BS	AlGaInP	Super Bright Red	632	624	Water Clear	2.00	2.40	20	80	120	130
S192AC-2BS	AlGaInP	Super Bright Orange	610	605		2.00	2.40		80	120	
S192YC-2BS	AlGaInP	Super Bright Yellow	592	590		2.00	2.40		80	120	
S192GC-2BS	AlGaInP	Yellow Green	575	573		2.00	2.40		35	70	
S192PGC-G5-1BS	InGaN	Pure Green	520	525		3.20	3.60		250	550	
S192BC-B4-1BS	InGaN	Blue	468	470		3.20	3.60		80	150	

1.00mm×0.50mm×0.40mm (0402) Single Color Chip LED

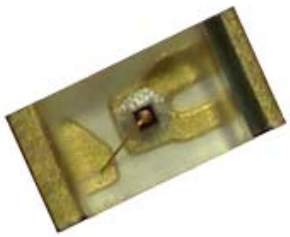

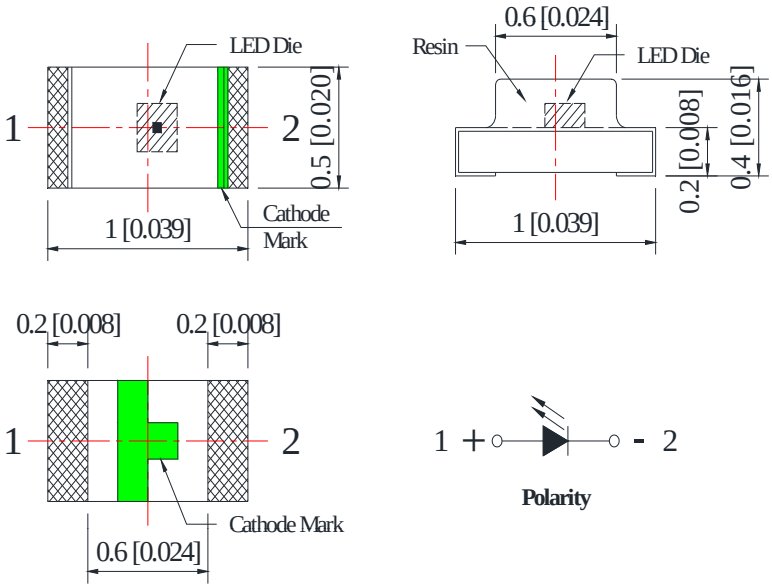

S162VC-1BJ	AlGaInP	Super Bright Red	632	624	Water Clear	2.00	2.40	20	80	120	120
S162AC-1BJ	AlGaInP	Super Bright Orange	610	605		2.00	2.40		70	120	
S162YC-1BJ	AlGaInP	Super Bright Yellow	592	590		2.00	2.40		70	120	
S162GC-1BJ	AlGaInP	Yellow Green	575	573		2.00	2.40		15	35	
S162PGC-G5-1BJ	InGaN	Pure Green	520	525		3.20	3.60		400	650	
S162BC-B4-1BJ	InGaN	Blue	468	470		3.20	3.60		80	140	

Part Number	Chip Material	Emitting Color	λp (nm) / x	λd (nm) / y	Lens Color	VF (V)		IV (mcd)			Viewing Angle
						Typ.	Max.	IF=mA	Min.	Typ.	2θ ½

1.00mm×0.50mm×0.45mm (0402) Single Color Chip LED

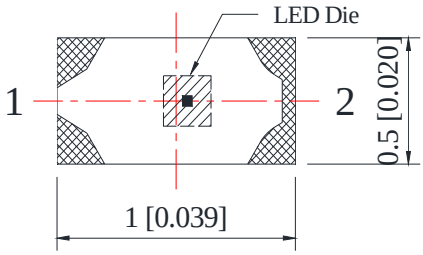

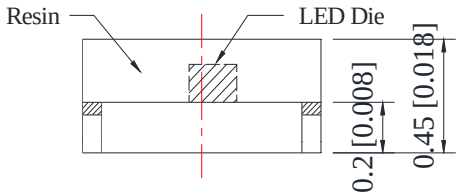

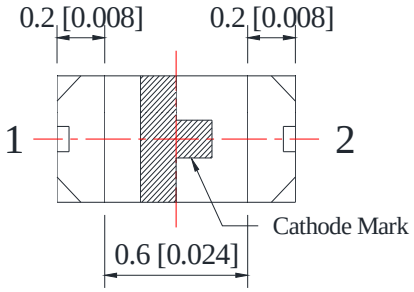

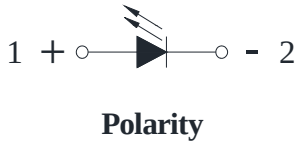

S160VC-2BS	AlGaInP	Super Bright Red	632	624	Water Clear	2.00	2.40	20	50	100	120
S160AC-2AS	AlGaInP	Super Bright Orange	610	605		2.00	2.40		40	80	
S160YC-2BS	AlGaInP	Super Bright Yellow	592	590		2.00	2.40		50	100	
S160GC-2BS	AlGaInP	Yellow Green	575	573		2.00	2.40		20	50	
S160PGC-G5-1BS	InGaN	Pure Green	520	525		3.20	3.60		150	250	
S160BC-B4-1BS	InGaN	Blue	468	470		3.20	3.60		40	80	

3.20mm×1.60mm×1.40mm With Inner Lens Single Color Chip LED

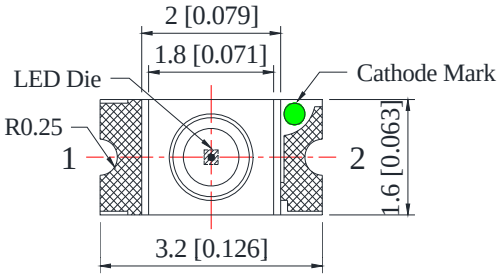

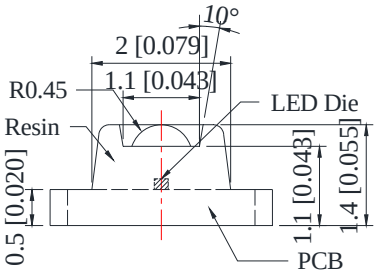

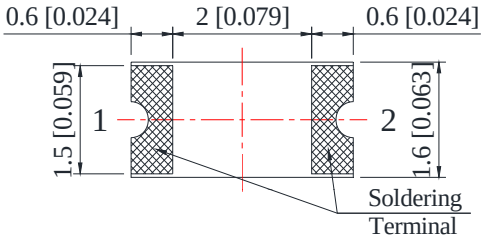

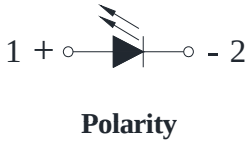

S350VC-2BS	AlGaInP	Super Bright Red	632	624	Water Clear	2.00	2.40	20	200	400	60
S350AC-2AS	AlGaInP	Super Bright Orange	610	605		2.00	2.40		250	500	
S350YC-2BS	AlGaInP	Super Bright Yellow	592	590		2.00	2.40		200	450	
S350GC-2BS	AlGaInP	Yellow Green	575	573		2.00	2.40		100	200	
S350PGC-G5-1BS	InGaN	Pure Green	520	525		3.20	3.60		750	1000	
S350BC-B4-1BS	InGaN	Blue	468	470		3.20	3.60		500	850	

Part Number	Chip Material	Emitting Color	λp (nm) / x	λd (nm) / y	Lens Color	VF (V)		IV (mcd)			Viewing Angle
						Typ.	Max.	IF=mA	Min.	Typ.	2θ ½

1.60mm×0.80mm×0.95mm (0603) Dome Lens Single Color Chip LED

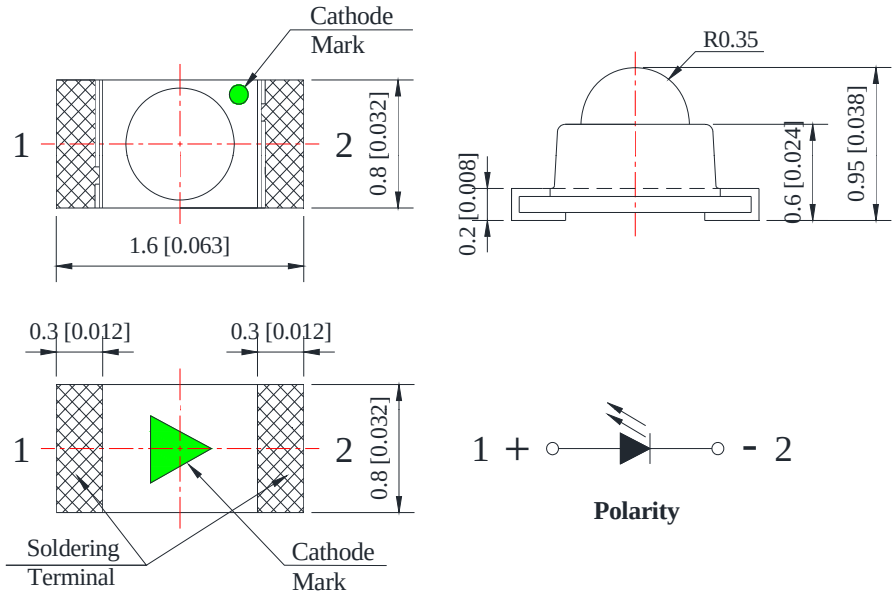

SR190VC-2BJ	AlGaInP	Super Bright Red	632	624	Water Clear	2.00	2.40	20	200	400	35
SR190AC-2BJ	AlGaInP	Super Bright Orange	610	605		2.00	2.40		200	400	
SR190YC-2BJ	AlGaInP	Super Bright Yellow	592	590		2.00	2.40		200	400	
SR190GC-2BJ	AlGaInP	Yellow Green	575	573		2.00	2.40		80	130	
SR190PGC-G5-1BJ	InGaN	Pure Green	520	525		3.20	3.60		1000	2000	
SR190BC-B4-1BJ	InGaN	Blue	468	470		3.20	3.60		200	400	

3.20mm×2.40mm×2.50mm 1.80mm Round Subminiature Single Color Chip LED

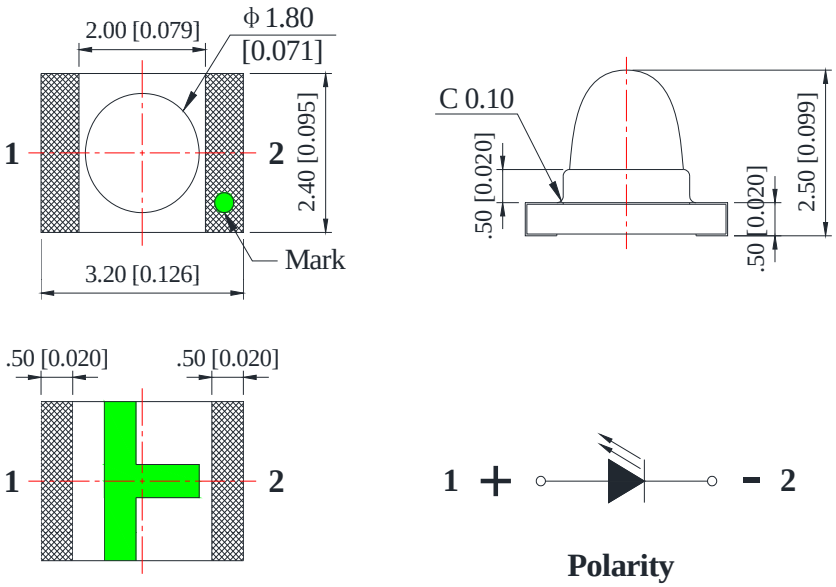

SR180VC-2B	AlGaInP	Super Bright Red	632	624	Water Clear	2.00	2.40	20	1000	1500	20
SR180AC-2B	AlGaInP	Super Bright Orange	610	605		2.00	2.40		1000	1500	
SR180YC-2B	AlGaInP	Super Bright Yellow	592	590		2.00	2.40		1000	1500	
SR180GC-2B	AlGaInP	Yellow Green	575	573		2.00	2.40		500	1000	
SR180PGC-G5-1B	InGaN	Pure Green	520	525		3.20	3.60		2000	4000	
SR180BC-B4-1B	InGaN	Blue	468	470		3.20	3.60		1000	1500	

Part Number	Chip Material	Emitting Color	λp (nm) / x	λd (nm) / y	Lens Color	VF (V)		IV (mcd)			Viewing Angle
						Typ.	Max.	IF=mA	Min.	Typ.	2θ ½

1.60mm×0.80mm×0.55mm PLCC-2 Top View Single Color LED

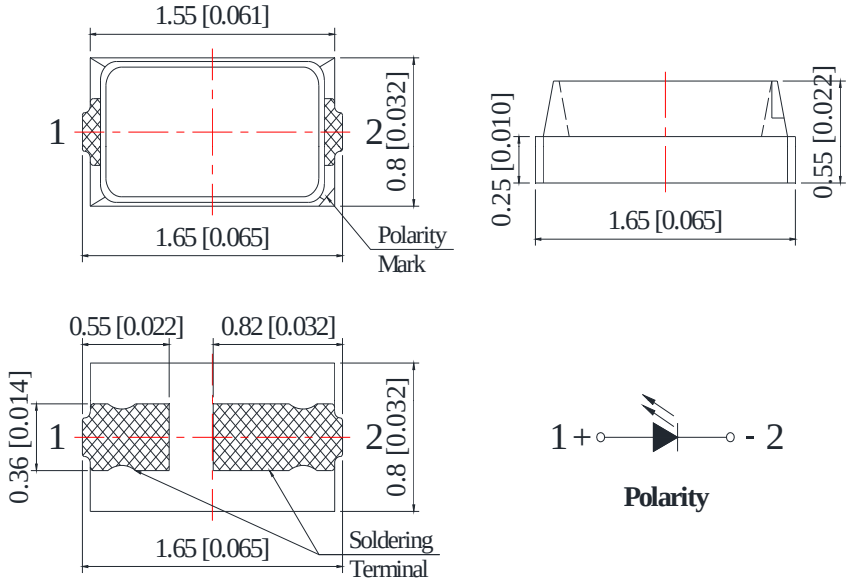

R1608VC-1B	AlGaInP	Super Bright Red	632	624	Water Clear	2.00	2.40	20	150	250	120
R1608AC-1B	AlGaInP	Super Bright Orange	610	605		2.00	2.40		100	150	
R1608YC-1B	AlGaInP	Super Bright Yellow	592	590		2.00	2.40		100	250	
R1608PGC-G5-1B	InGaN	Pure Green	520	525		3.20	3.60		1000	1600	
R1608BC-B4-1B	InGaN	Blue	468	470		3.20	3.60		200	300	
R1608W-W2-1C	InGaN	Cool White	x=0.27	y=0.28	Yellow Diffused	3.20	3.60		900	1100	

3.50mm×2.80mm×1.90mm PLCC-2 Top View Single Color LED

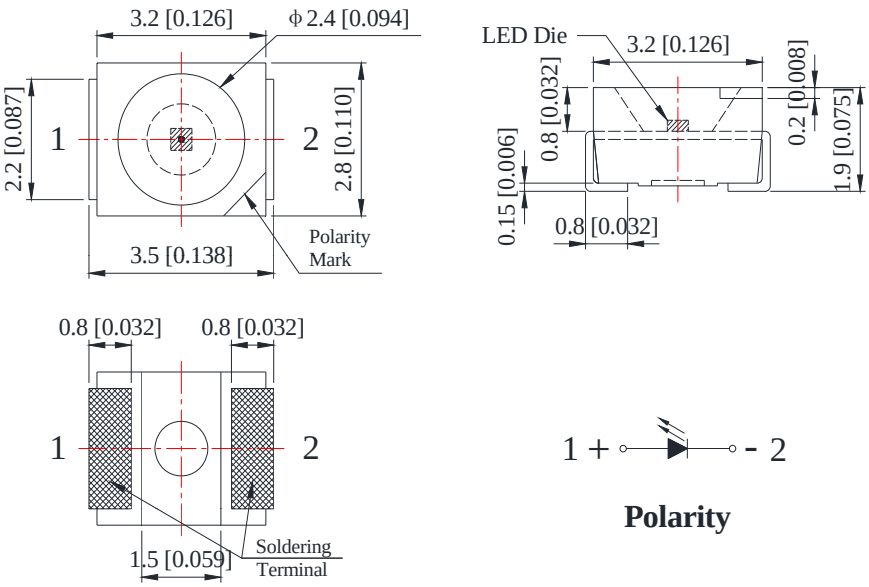

R3528VC-3C	AlGaInP	Super Bright Red	632	624	Water Clear	2.00	2.40	20	400	600	120
R3528AC-2B	AlGaInP	Super Bright Orange	610	605		2.00	2.40		100	200	
R3528YC-3C	AlGaInP	Super Bright Yellow	592	590		2.00	2.40		400	600	
R3528GC-2B	AlGaInP	Yellow Green	575	573		2.00	2.40		30	70	
R3528PGC-G5-1B	InGaN	Pure Green	520	525		3.20	3.60		1200	1800	
R3528BC-B4-1B	InGaN	Blue	468	470		3.20	3.60		200	400	

Part Number	Chip Material	Emitting Color	λp (nm) / x	λd (nm) / y	Lens Color	VF (V)		IV (mcd) / ΦV (lm)			Viewing Angle
						Typ.	Max.	IF=mA	Min.	Typ.	2θ ½

3.50mm×2.80mm×1.90mm Reverse Package PLCC-2 Bottom View Single Color LED

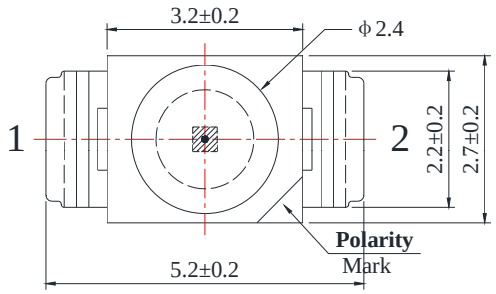

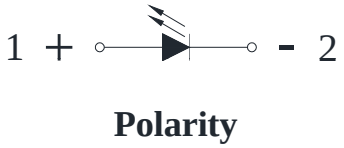

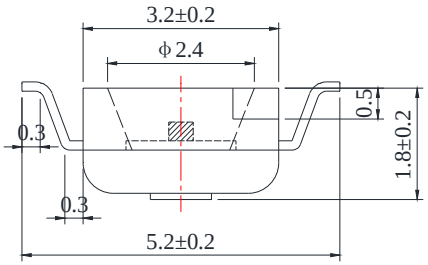

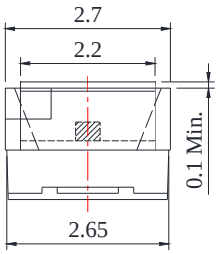

R3528VC-2B-TR10	AlGaInP	Super Bright Red	632	624	Water Clear	2.00	2.40	20	80	150	120
R3528AC-2B-TR10	AlGaInP	Super Bright Orange	610	605		2.00	2.40		60	120	
R3528YC-2B-TR10	AlGaInP	Super Bright Yellow	592	590		2.00	2.40		80	150	
R3528GC-2B-TR10	AlGaInP	Yellow Green	575	573		2.00	2.40		20	40	
R3528PGC-G5-1B-TR10	InGaN	Pure Green	520	525		3.20	3.60		400	900	
R3528BC-B4-1B-TR10	InGaN	Blue	468	470		3.20	3.60		200	400	

3.50mm×2.80mm×3.25mm PLCC-2 Top View Single Color LED With Lens

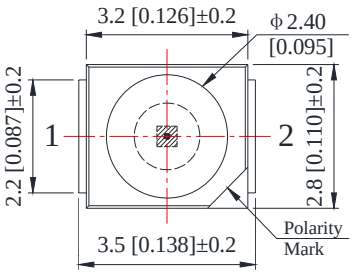

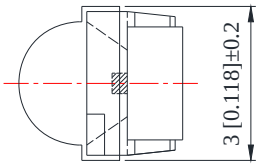

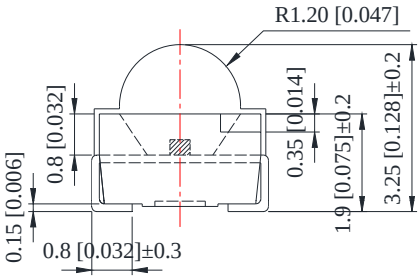

RT3528VM-4C	AlGaInP	Super Bright Red	632	624	White Diffused	2.20	2.60	60	2000	3000	60
RT3528AM-4C	AlGaInP	Super Bright Orange	610	605		2.20	2.60		2000	3000	
RT3528YM-4C	AlGaInP	Super Bright Yellow	594	592		2.20	2.60		2000	3000	
RT3528PGM-G5 -1B	InGaN	Pure Green	520	525		3.20	3.60	20	2000	3000	
RT3528BM-B4-1C	InGaN	Blue	463	465		3.20	3.60		1000	1500	
RT3528W-W2-1F	InGaN	White	x=0.32	y=0.33	Yellow Diffused	3.20	3.60		2000	2500	

Part Number	Chip Material	Emitting Color	λp (nm) / x	λd (nm) / y	Lens Color	VF (V)		IV (mcd) / ΦV (lm)			Viewing Angle
						Typ.	Max.	IF=mA	Min.	Typ.	2θ ½

3.50mm×2.80mm×3.50mm PLCC-4 Top View Single Color LED With Lens

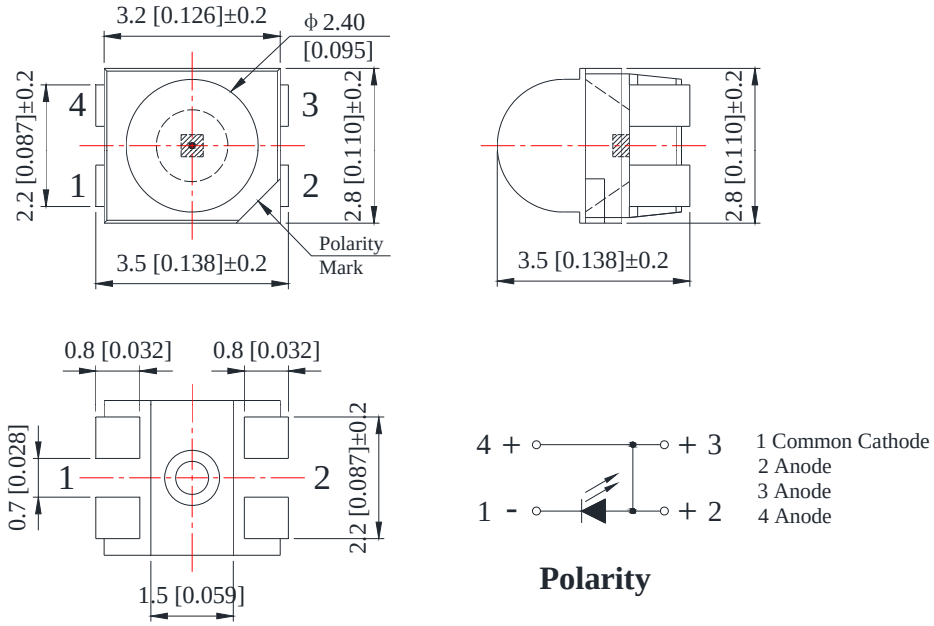

RT3528V1C-C-5C	AlGaInP	Super Bright Red	625	620	Water Clear	2.10	2.60	50	7000	10000	30
RT3528Y1C-C-5C	AlGaInP	Super Bright Yellow	592	590		2.10	2.60		7000	10000	
RT3528BG1C-A-G3-1B	InGaN	Bluish Green	500	505		3.10	3.60	30	5000	8000	

5.00mm×5.50mm×1.50mm PLCC-6 Top View Single Color LED

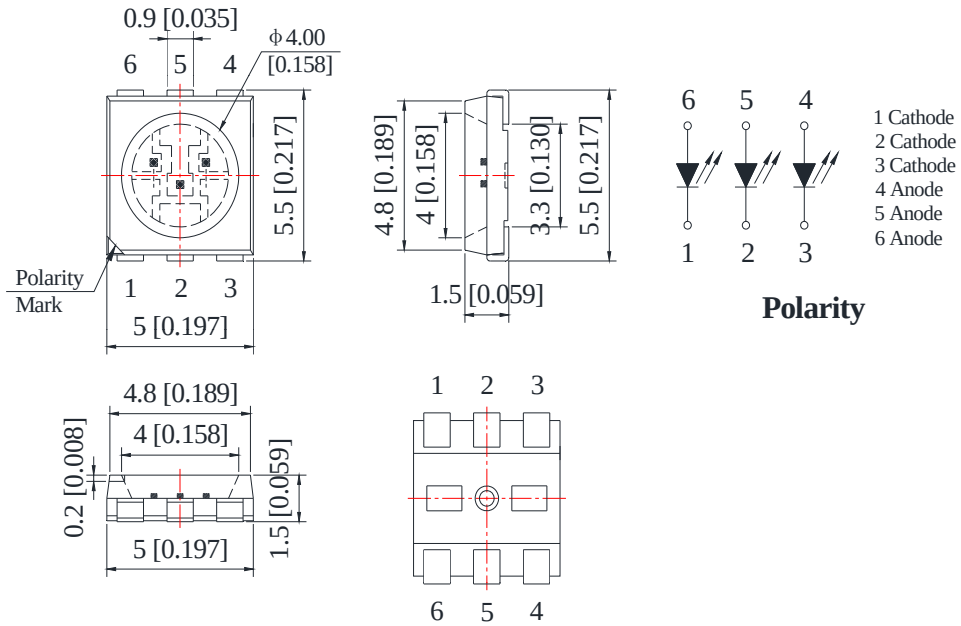

R5050VC-3C	AlGaInP	Super Bright Red	632	624	Water Clear	2.00	2.40	60	1600	2000	120
R5050AC-2B	AlGaInP	Super Bright Orange	610	605		2.00	2.40		400	600	
R5050YC-3C	AlGaInP	Super Bright Yellow	592	590		2.00	2.40		1200	1600	
R5050GC-2B	AlGaInP	Yellow Green	575	573		2.00	2.40		200	350	
R5050PGC-G5-1B	InGaN	Pure Green	520	525		3.20	3.60		3500	4500	
R5050BC-B4-1B	InGaN	Blue	468	470		3.20	3.60		800	1200	

Part Number	Chip Material	Emitting Color	λp (nm) / P.W	λd (nm) / P.W	Lens Color	VF (V)		IV (mcd) / Ee (mW/Sr) / Radiant Flux (mW)			Viewing Angle
						Typ.	Max.	IF=mA	Min.	Typ.	2θ ½

3.50mm×3.50mm×1.36mm Top View UVC 275nm+UVA 395nm LED Surface Mount Sterilization LED

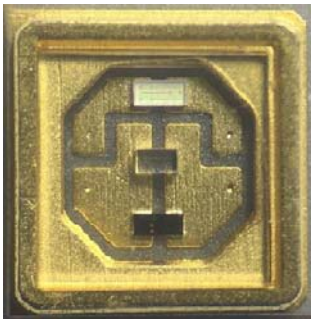

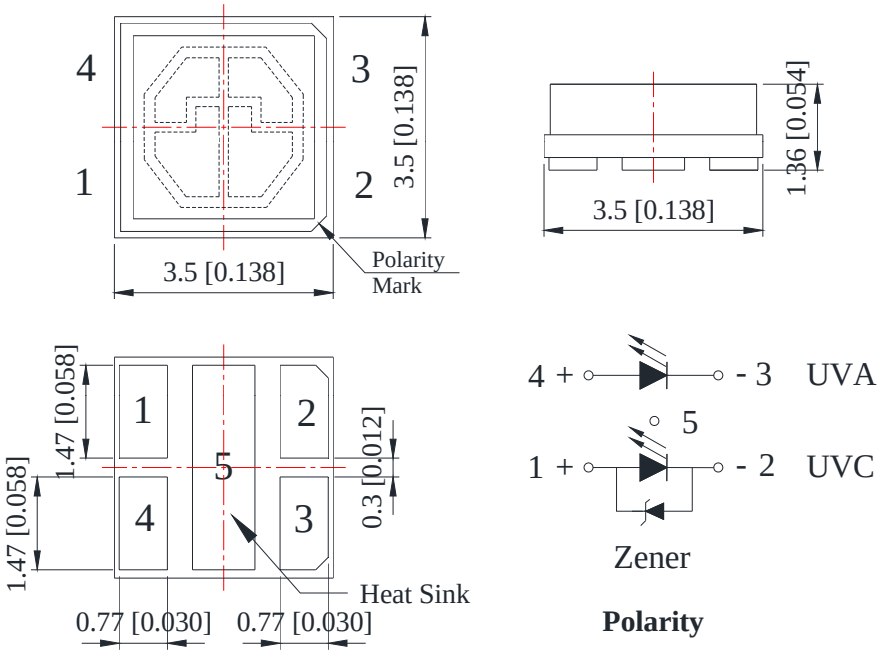

C3535DUVC-QB-Q5-DY	InGaN	UVC	275	/	Quartz Glass	6.00	7.00	40	3.00	5.00	120
		UVA	395	/		3.20	3.60	100	20.00	40.00	

3.50mm×3.50mm×1.60mm Top View Deep UV Surface Mount Sterilization LED

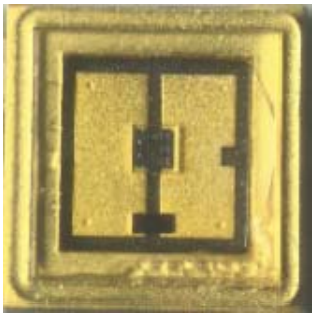

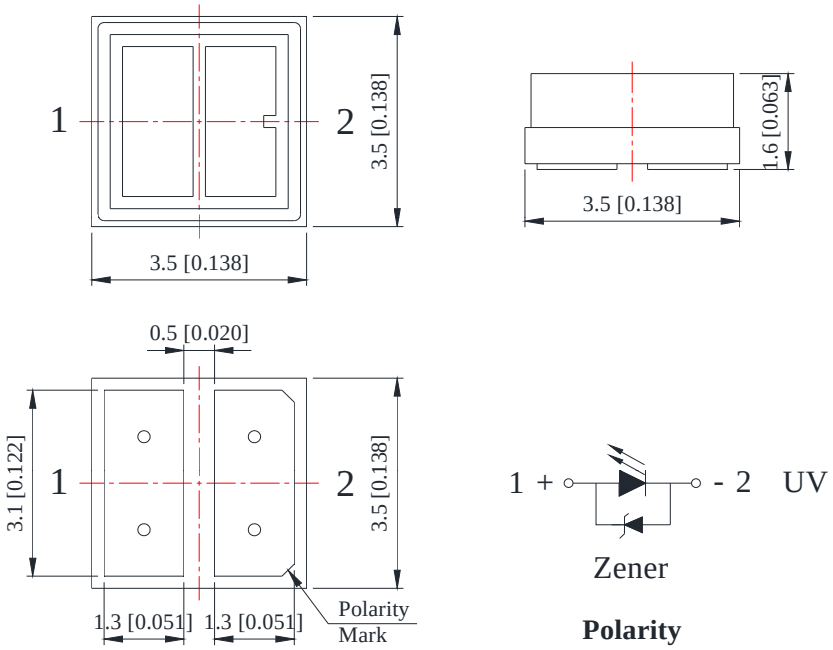

C3535DUVC-QBH-1C-D	InGaN	Deep UV	275	/	Quartz Glass	6.50	7.00	50	/	5.80	120

Part Number	Chip Material	Emitting Color	λp (nm) / P.W	λd (nm) / P.W	Lens Color	VF (V)		IV (mcd) / Ee (mW/Sr) / Radiant Flux (mW)			Viewing Angle
						Typ.	Max.	IF=mA	Min.	Typ.	2θ ½

5.00mm×5.00mm×1.70mm Top View Deep UV Surface Mount Sterilization LED

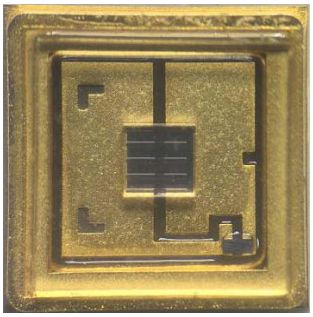

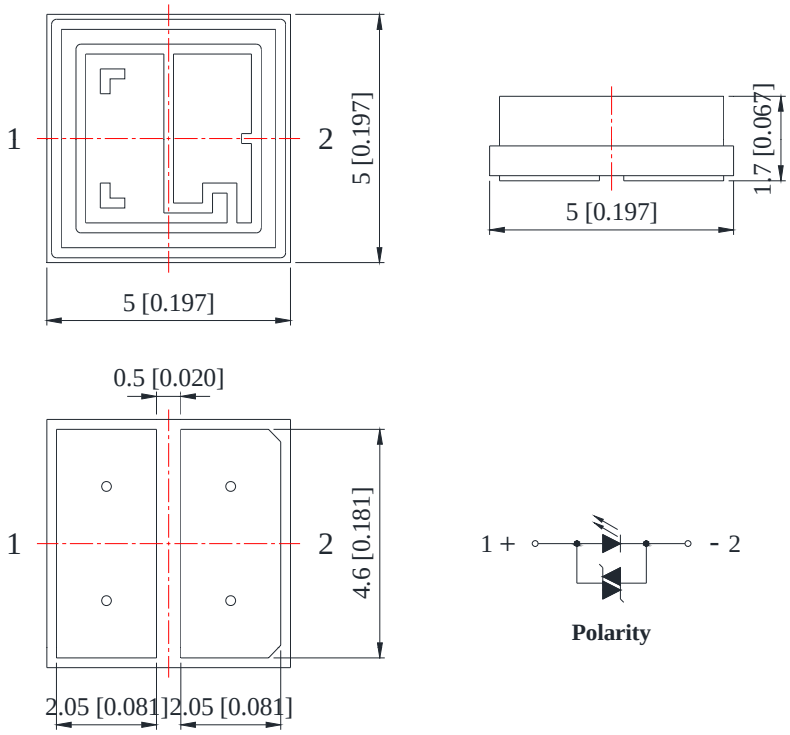

C5050DUVC-QBH-1C-D	InGaN	Deep UV	275	/	Quartz Glass	6.50	7.00	350	35.00	50.00	120

1.60mm×1.50mm×0.60mm Bi-color Chip LED

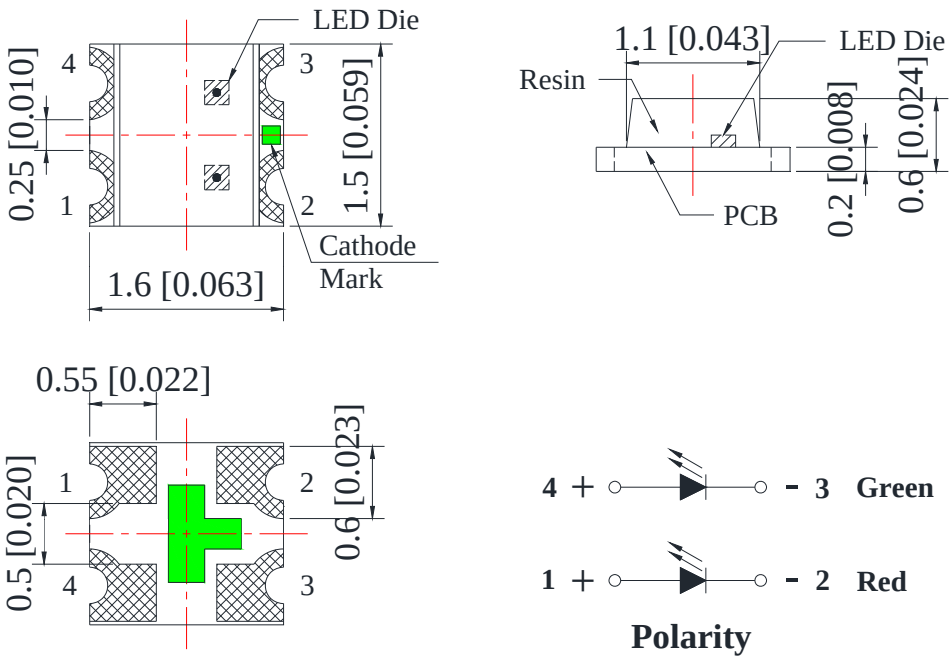

S195VGC-2CC	AlGaInP	Super Bright Red	632	624	Water Clear	2.00	2.40	20	70	110	140
	AlGaInP	Yellow Green	575	573		2.00	2.40		25	40	

Part Number	Chip Material	Emitting Color	λp (nm) / x	λd (nm) / y	Lens Color	VF (V)		IV (mcd) / Ee (mW/Sr) / Radiant Flux (mW)			Viewing Angle
						Typ.	Max.	IF=mA	Min.	Typ.	2θ ½

1.90mm×1.60mm×0.80mm Bi-color Chip LED

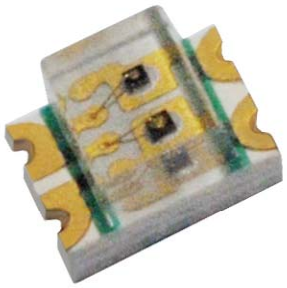

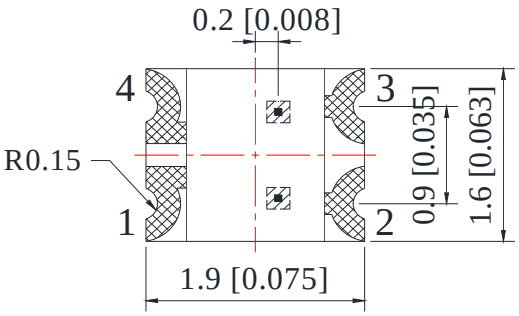

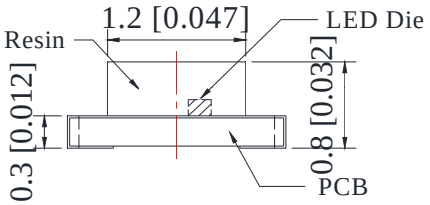

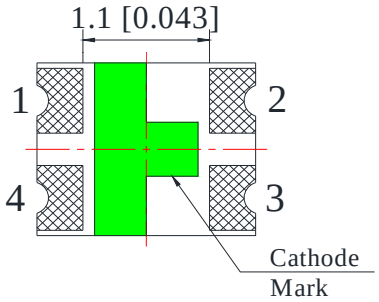

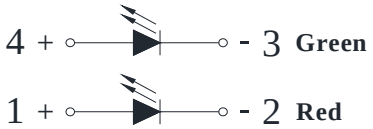

Polarity

S195EVGC-2BE	AlGaInP	Super Bright Red	632	624	Water Clear	2.00	2.40	20	35	70	140
	AlGaInP	Yellow Green	575	573		2.00	2.40		25	60	

3.20mm×2.70mm×1.10mm Bi-color Chip LED

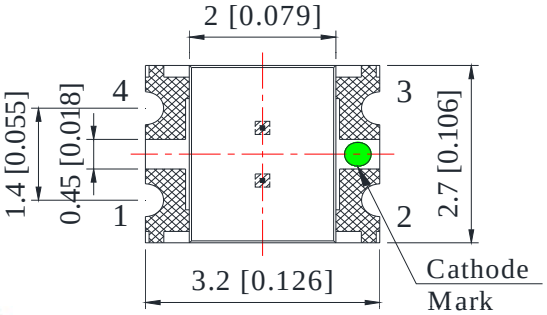

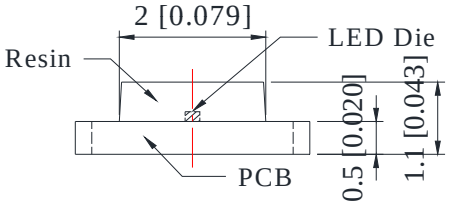

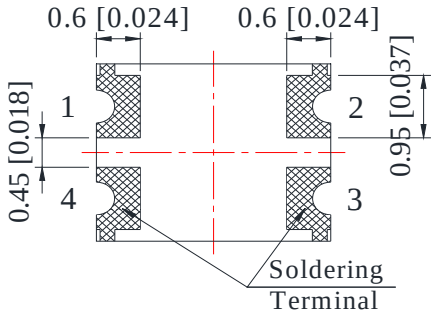

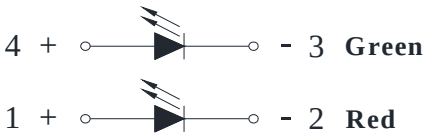

Polarity

S155VGC-2BS	AlGaInP	Super Bright Red	632	624	Water Clear	2.00	2.40	20	80	120	120
	AlGaInP	Yellow Green	575	573		2.00	2.40		35	70	

Part Number	Chip Material	Emitting Color	λp (nm) / x	λd (nm) / y	Lens Color	VF (V)		IV (mcd) / Ee (mW/Sr) / Radiant Flux (mW)			Viewing Angle
						Typ.	Max.	IF=mA	Min.	Typ.	2θ ½

1.60mm×0.80mm×0.60mm Bi-color Chip LED

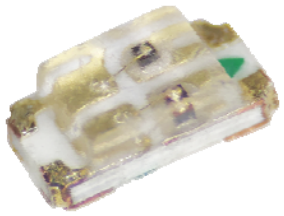

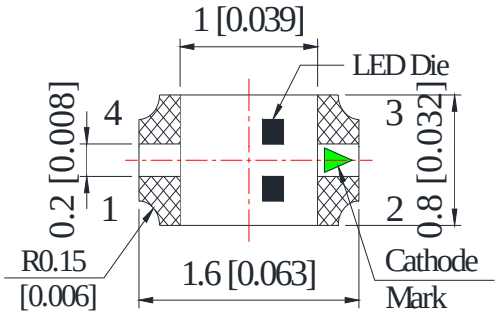

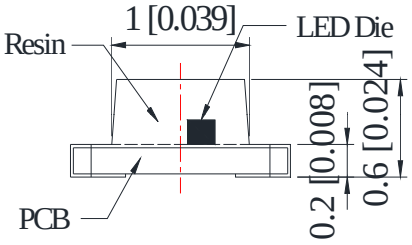

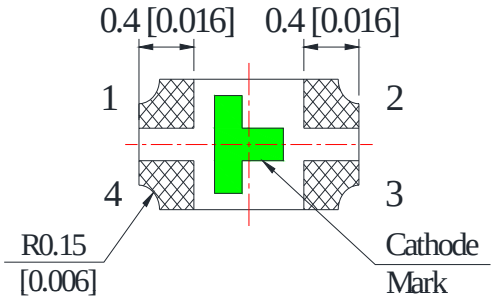

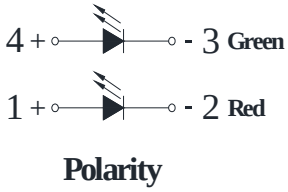

S195AVGC-2BM	AlGaInP	Super Bright Red	632	624	Water Clear	2.00	2.40	20	80	120	120
	AlGaInP	Yellow Green	575	573		2.00	2.40		20	40	

3.20mm×1.25mm×1.10mm Reverse Package Bi-color Chip LED

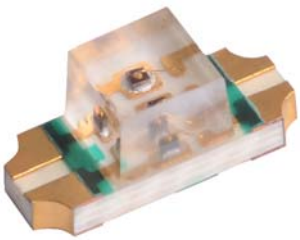

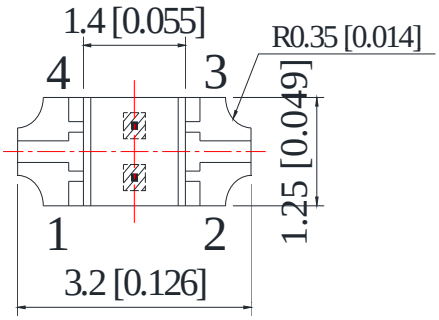

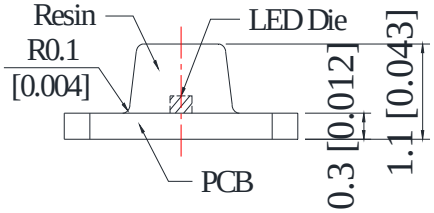

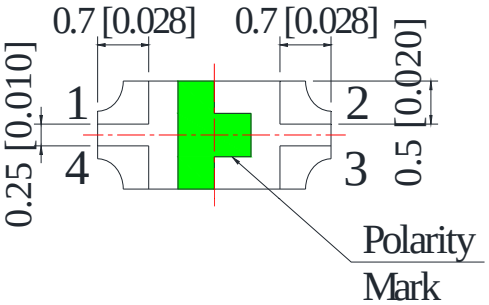

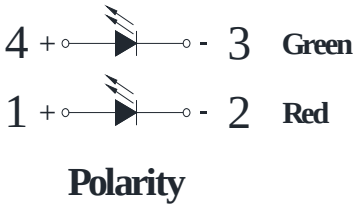

S155EVGC-2BC	AlGaInP	Super Bright Red	632	624	Water Clear	2.00	2.40	20	80	120	130
	AlGaInP	Yellow Green	575	573		2.00	2.40		20	55	

Part Number	Chip Material	Emitting Color	λp (nm) / x	λd (nm) / y	Lens Color	VF (V)		IV (mcd)			Viewing Angle
						Typ.	Max.	IF=mA	Min.	Typ.	2θ ½

3.00mm×2.50mm×1.50mm With Inner Lens Bi-color Chip LED

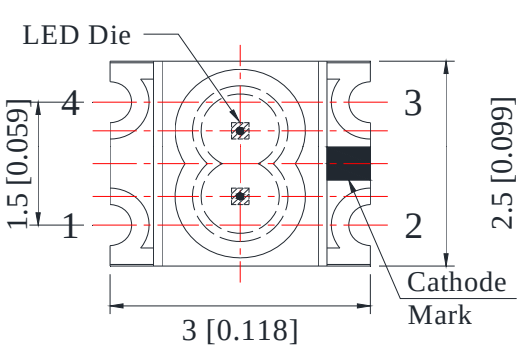

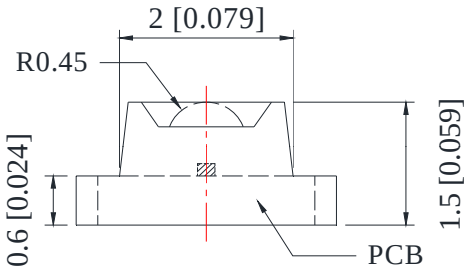

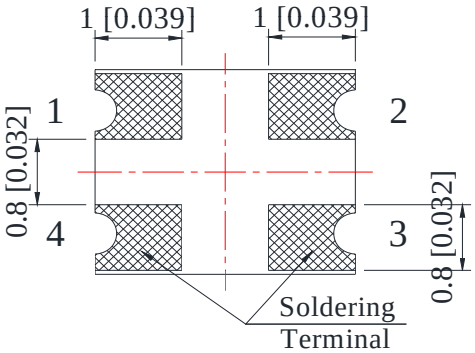

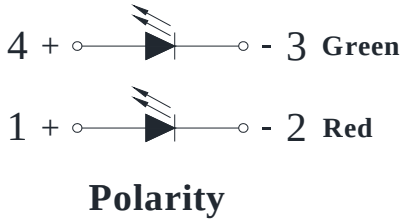

S355VGC-2BE	AlGaInP	Super Bright Red	632	624	Water Clear	2.00	2.40	20	100	200	60
	AlGaInP	Yellow Green	575	573		2.00	2.40		50	100	

3.00mm×1.00mm×2.00mm With Right Angle Lens Bi-color Chip LED

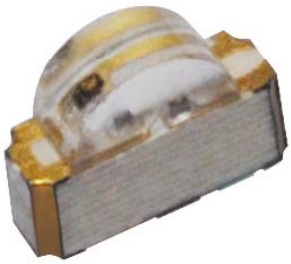

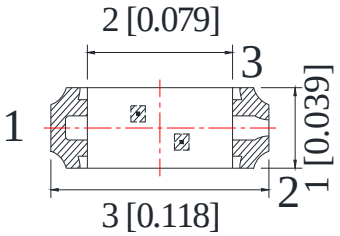

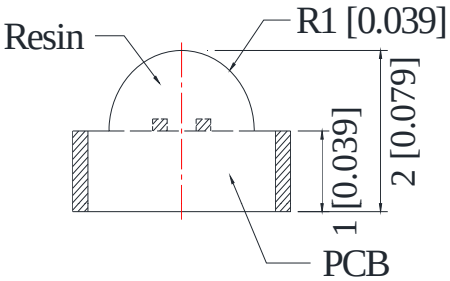

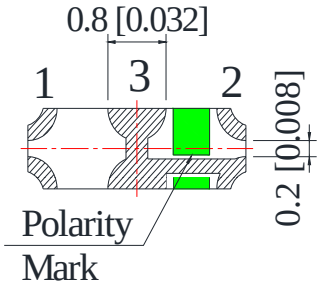

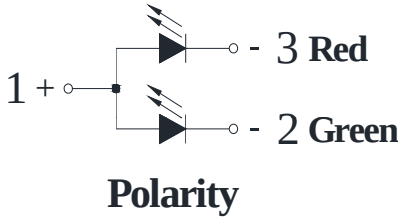

S115PVGC-2BE	AlGaInP	Super Bright Red	632	624	Water Clear	2.00	2.40	20	40	80	120
	AlGaInP	Yellow Green	575	573		2.00	2.40		30	50	

Part Number	Chip Material	Emitting Color	λp (nm) / x	λd (nm) / y	Lens Color	VF (V)		IV (mcd)			Viewing Angle
						Typ.	Max.	IF=mA	Min.	Typ.	2θ ½

3.20mm×2.40mm×2.50mm 1.80mm Round Subminiature Bi-color Chip LED

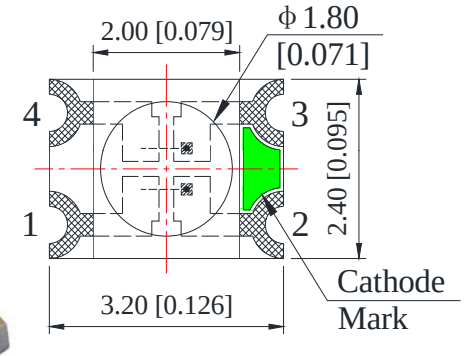

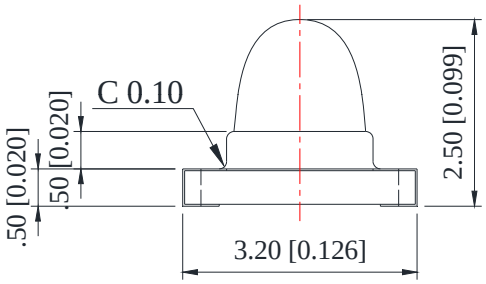

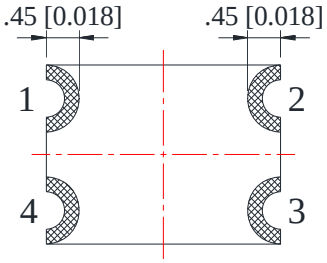

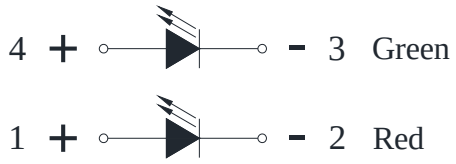

Polarity

SR185VGC-2B	AlGaInP	Super Bright Red	632	624	Water Clear	2.00	2.40	20	300	700	30
	AlGaInP	Yellow Green	575	573		2.00	2.40		100	300	

1.60mm×1.50mm×0.60mm (0606) Multi-Color Chip LED

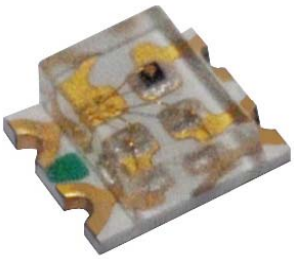

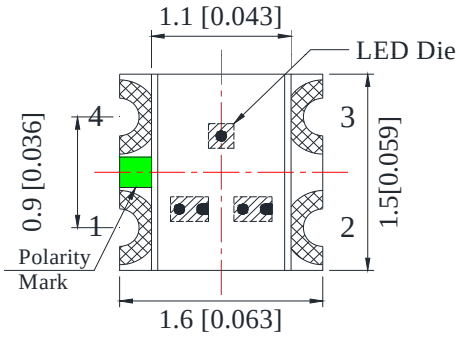

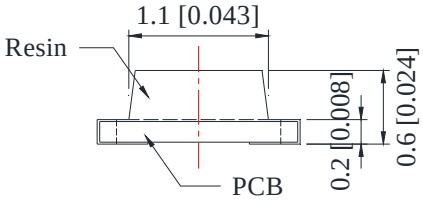

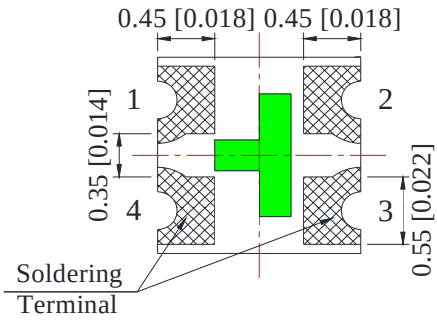

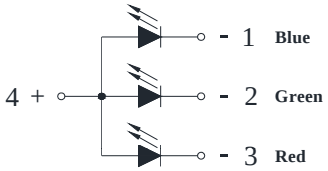

Polarity

S197CRGBC-001	AlGaInP	Super Bright Red	632	624	Water Clear	2.00	2.40	20	80	120	120
	InGaN	Pure Green	520	525		3.20	3.60		250	400	
	InGaN	Blue	468	470		3.20	3.60		80	120	

Part Number	Chip Material	Emitting Color	λp (nm) / x	λd (nm) / y	Lens Color	VF (V)		IV (mcd)			Viewing Angle
						Typ.	Max.	IF=mA	Min.	Typ.	2θ ½

1.60mm×1.50mm×0.60mm (0606) Multi-Color Chip LED

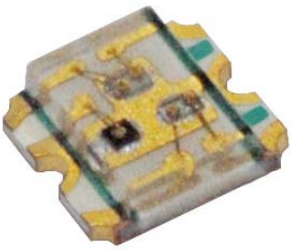

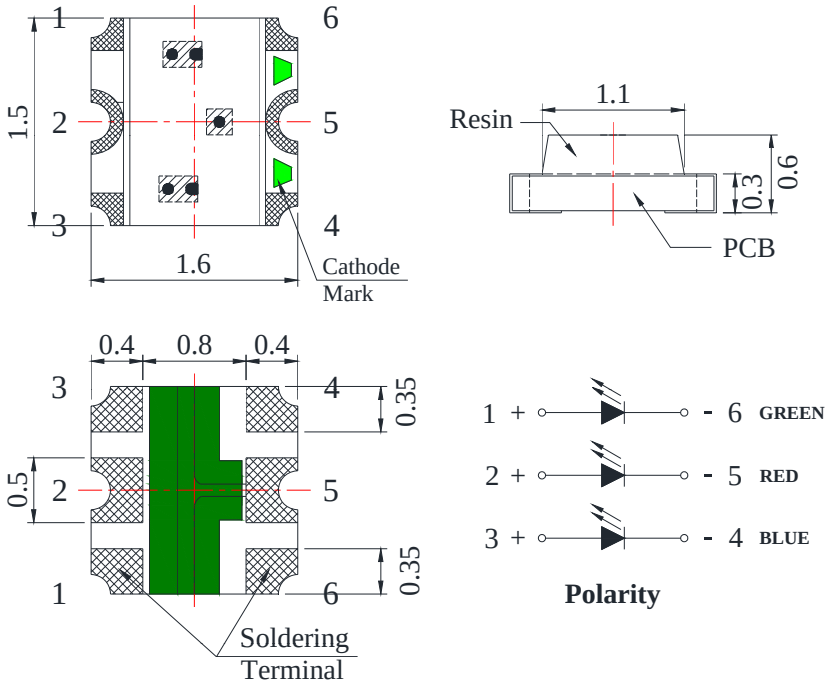

S197FRGBC-001J	AlGaInP	Super Bright Red	632	624	Water Clear	2.00	2.40	20	80	120	120
	InGaN	Pure Green	520	525		3.20	3.60		350	550	
	InGaN	Blue	468	470		3.20	3.60		100	150	

3.00mm×1.00mm×1.40mm (1204) With Right Lens Multi-Color Chip LED

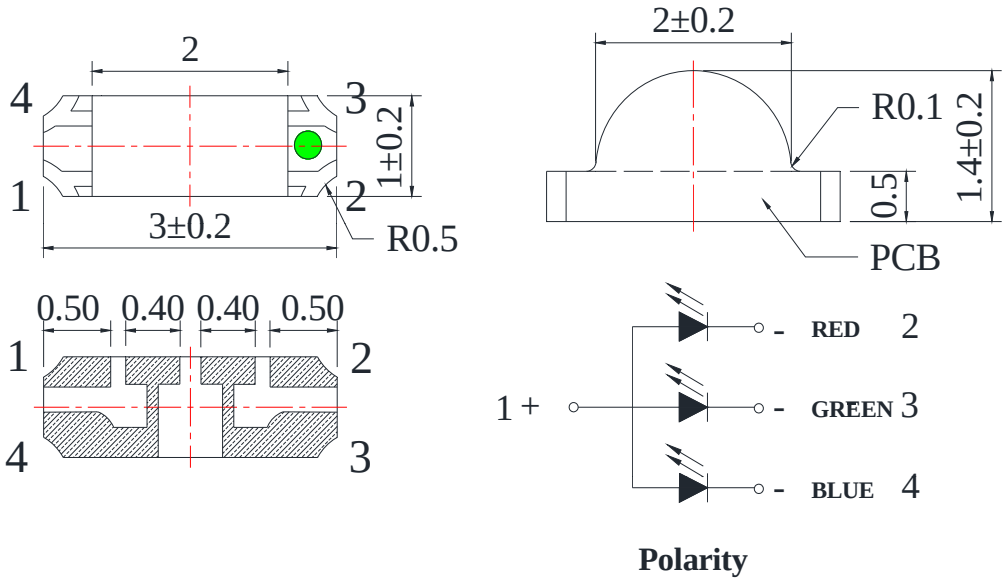

S117FRGBC-001	AlGaInP	Super Bright Red	632	624	Water Clear	2.00	2.40	20	80	150	120
	InGaN	Pure Green	520	525		3.20	3.60		250	500	
	InGaN	Blue	468	470		3.20	3.60		80	150	

Part Number	Chip Material	Emitting Color	λp (nm) / x	λd (nm) / y	Lens Color	VF (V)		IV (mcd)			Viewing Angle
						Typ.	Max.	IF=mA	Min.	Typ.	2θ ½

3.20mm×2.70mm×1.10mm (1210) Multi-Color Chip LED

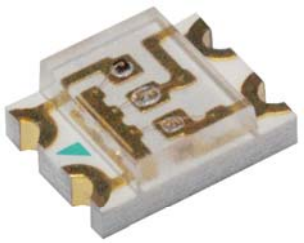

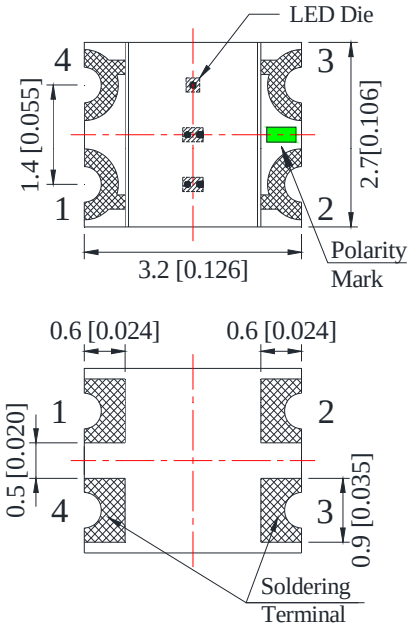

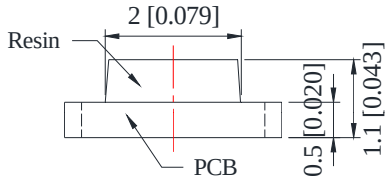

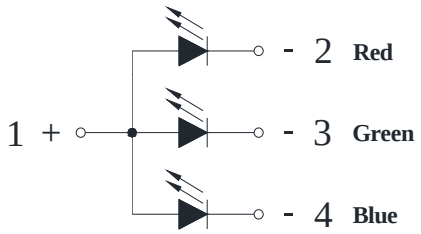

Polarity

S157BRGBC-001	AlGaInP	Super Bright Red	632	624	Water Clear	2.00	2.40	20	80	120	120
	InGaN	Pure Green	520	525		3.20	3.60		250	500	
	InGaN	Blue	468	470		3.20	3.60		80	120	

3.20mm×2.40mm×2.50mm (1210) 1.80mm Round Subminiature Multi-color Chip LED

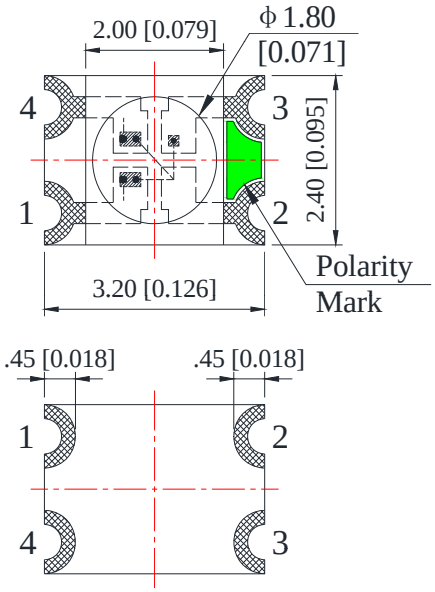

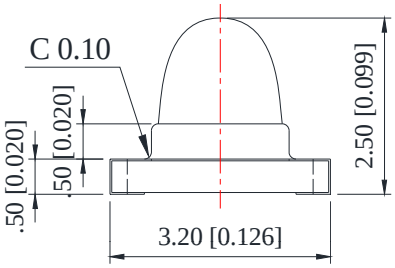

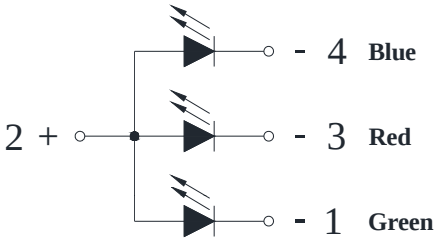

Polarity

SR187RGBC	AlGaInP	Super Bright Red	632	624	Water Clear	2.00	2.40	20	30	60	60
	InGaN	Pure Green	520	525		3.20	3.60		150	300	
	InGaN	Blue	468	470		3.20	3.60		25	50	

Part Number	Chip Material	Emitting Color	λp (nm) / x	λd (nm) / y	Lens Color	VF (V)		IV (mcd) / ΦV (lm)			Viewing Angle
						Typ.	Max.	IF=mA	Min.	Typ.	2θ ½

3.50mm×2.80mm×1.90mm PLCC-4 Top View Bi-Color LED

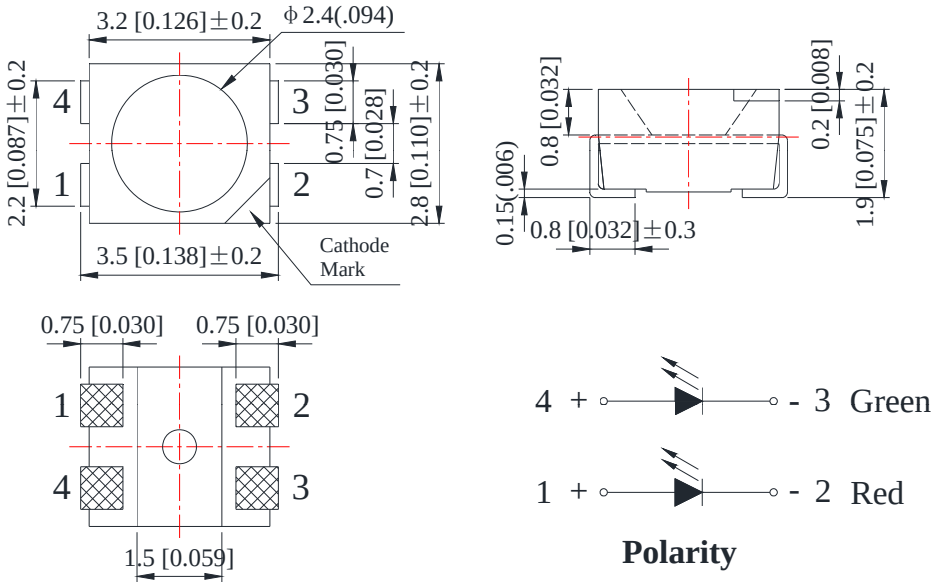

R3528VGC-2B	AlGaInP	Super Bright Red	632	624	Water Clear	2.00	2.40	20	100	200	120
	AlGaInP	Yellow Green	575	573		2.00	2.40		30	70	

3.50mm×2.80mm×1.90mm PLCC-4 Top View Multi-Color LED

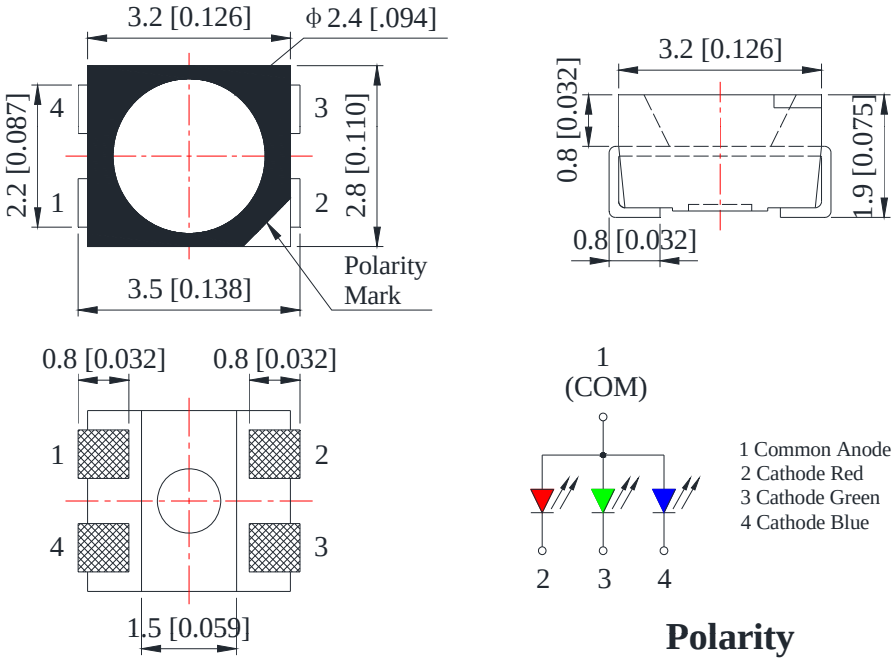

R3528RGBC-008-B	AlGaInP	Super Bright Red	632	624	Water Clear	2.00	2.40	20	200	400	120
	InGaN	Pure Green	520	525		3.20	3.60		800	1200	
	InGaN	Blue	468	470		3.20	3.60		150	300	

Part Number	Chip Material	Emitting Color	λp (nm) / x	λd (nm) / y	Lens Color	VF (V)		IV (mcd) / ΦV (lm)			Viewing Angle
						Typ.	Max.	IF=mA	Min.	Typ.	2θ ½

3.50mm×2.80mm×1.80mm PLCC-6 Top View Multi-Color LED

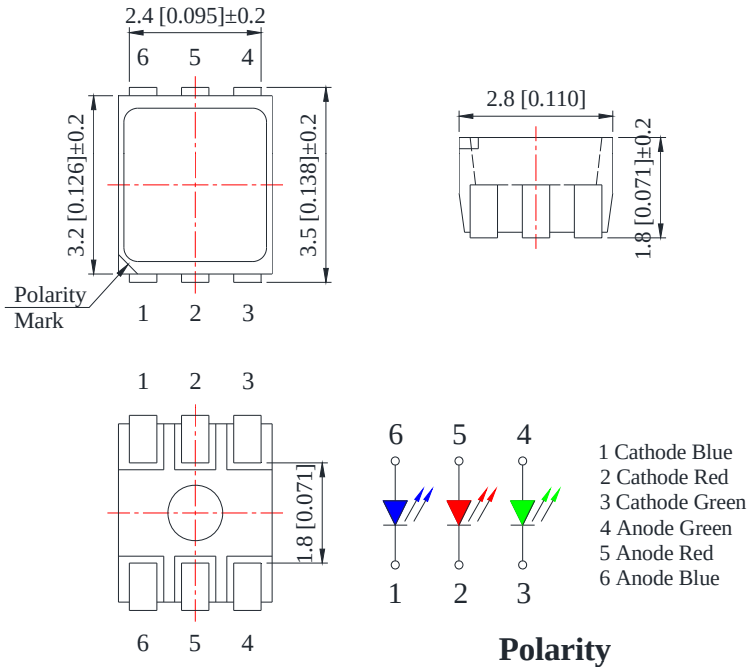

R3528BRGBC-001	AlGaInP	Super Bright Red	632	624	Water Clear	2.00	2.40	20	400	600	120
	InGaN	Pure Green	520	525		3.20	3.60		1200	1500	
	InGaN	Blue	468	470		3.20	3.60		300	500	

5.00mm×5.50mm×1.50mm PLCC-6 Top View Multi-Color LED

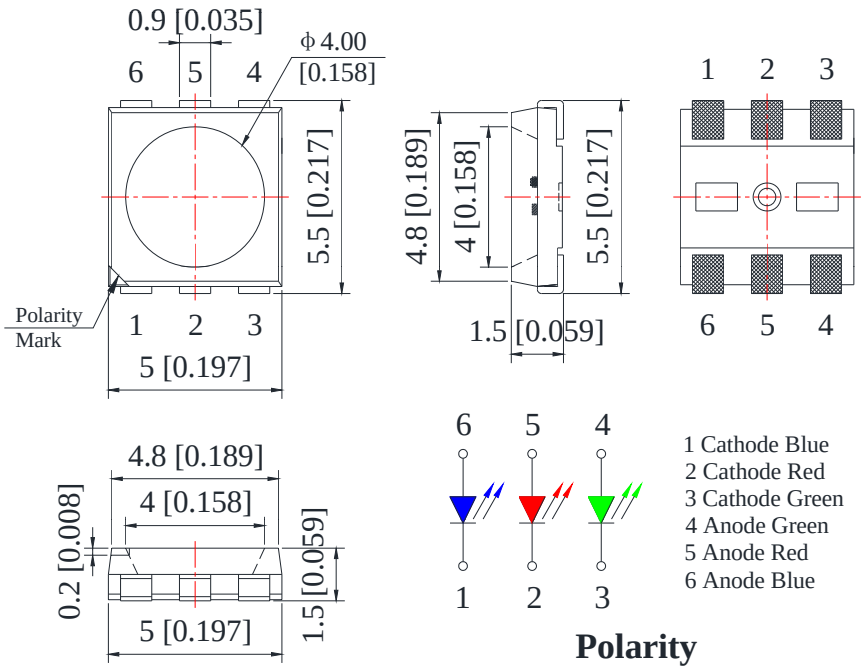

R5050RGBC-001	AlGaInP	Super Bright Red	632	624	Water Clear	2.00	2.40	20	650	800	120
	InGaN	Pure Green	520	525		3.20	3.60		1500	2000	
	InGaN	Blue	468	470		3.20	3.60		400	600	

Part Number	Chip Material	Emitting Color	λp (nm) / x	λd (nm) / y	Lens Color	VF (V)		IV (mcd) / ΦV (lm)			Viewing Angle
						Typ.	Max.	IF=mA	Min.	Typ.	2θ ½

5.00mm×5.50mm×1.50mm PLCC-8 Top View Multi-Color LED

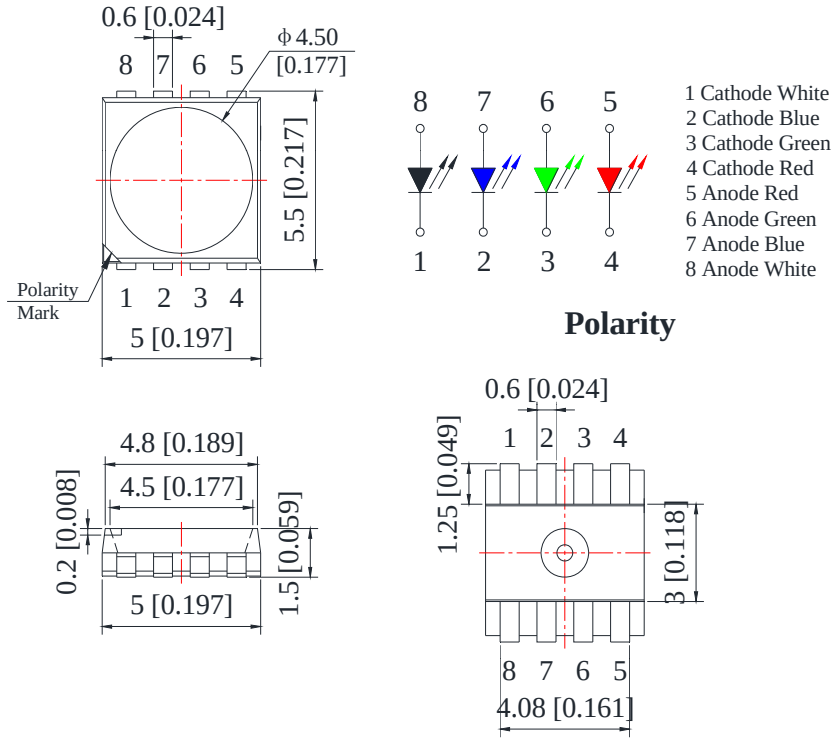

R5050RGBWC-001	AlGaInP	Super Bright Red	632	624	Water Clear	2.00	2.40	20	300	500	120
	InGaN	Pure Green	520	525		3.20	3.40		1500	2200	
	InGaN	Blue	468	470		3.20	3.40		250	450	
	InGaN	Cool White	x=0.31	y=0.32	Yellow Diffused	3.20	3.40		9 lm	10 lm	

3.20mm×1.60mm×1.10mm (1206) Single Color White Chip LED

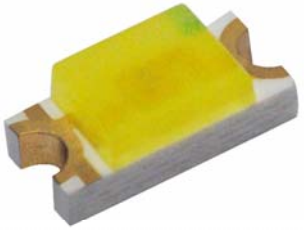

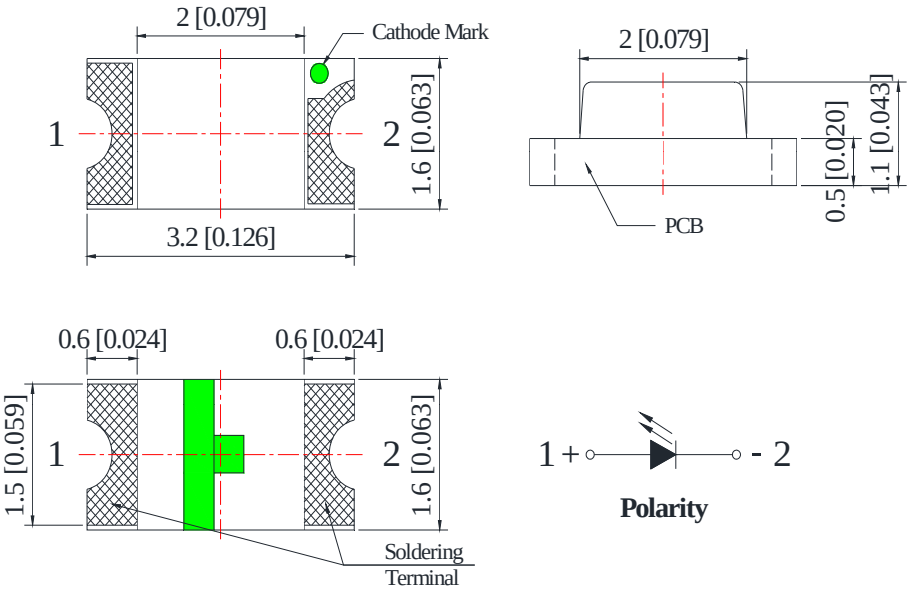

S150W-W2-1BG	InGaN	Cool White	x=0.27	y=0.28	Yellow Diffused	3.20	3.60	20	700	1100	120
S150W-W6-1ES	InGaN	Warm White	x=0.43	y=0.40		3.20	3.60		500	900	

Part Number	Chip Material	Emitting Color	λp (nm) / x	λd (nm) / y	Lens Color	VF (V)		IV (mcd) / ΦV (lm)			Viewing Angle
						Typ.	Max.	IF=mA	Min.	Typ.	2θ ½

2.00mm×1.25mm×1.10mm (0805) Single Color White Chip LED

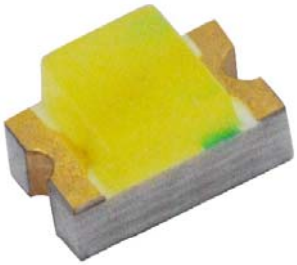

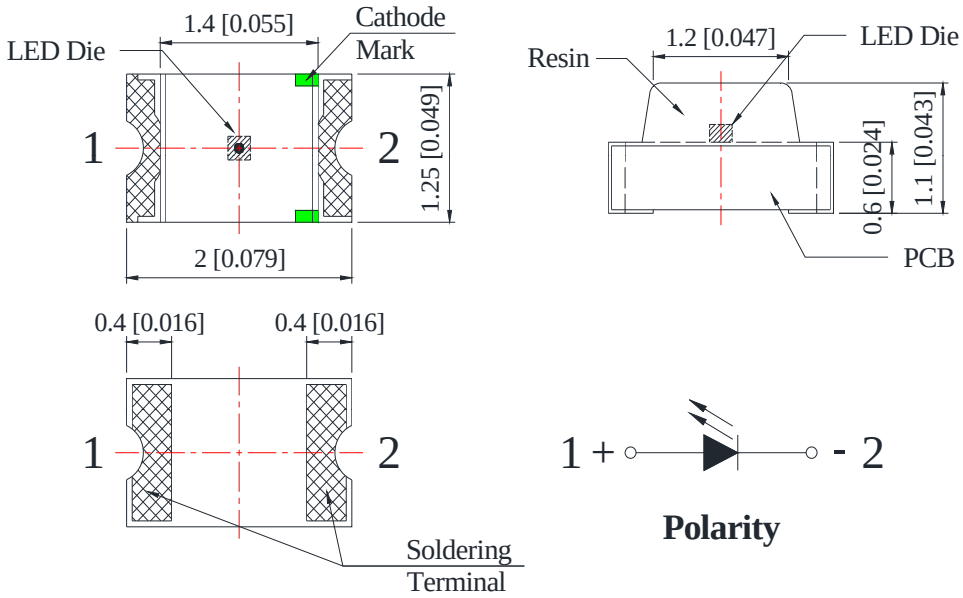

S170W-W2-1BG	InGaN	Cool White	x=0.30	y=0.30	Yellow Diffused	3.20	3.60	20	400	600	120

1.60mm×0.80mm×0.60mm (0603) Single Color White Chip LED

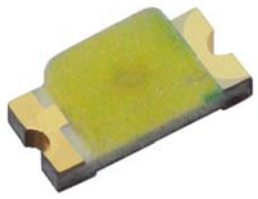

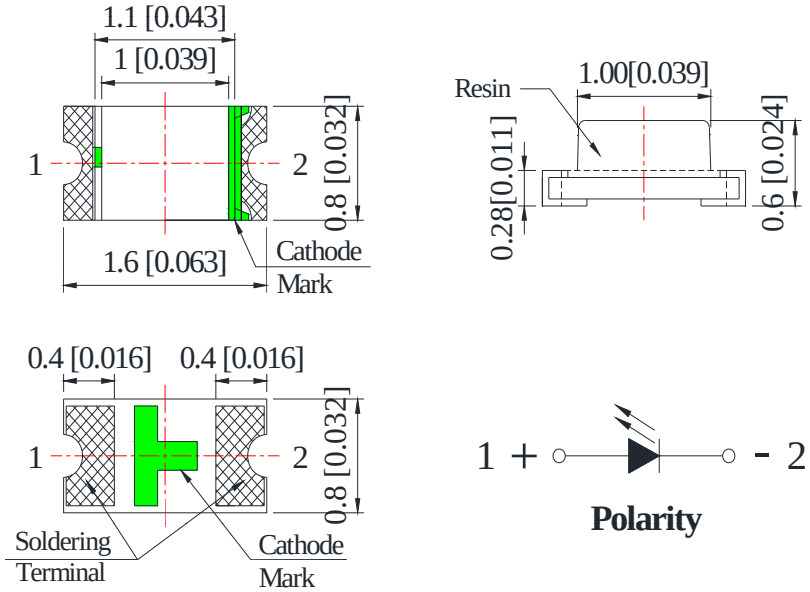

S192W-W2-1AG	InGaN	Cool White	x=0.27	y=0.27	Yellow Diffused	3.20	3.60	20	400	650	120

Part Number	Chip Material	Emitting Color	λp (nm) / x	λd (nm) / y	Lens Color	VF (V)		IV (mcd)			Viewing Angle
						Typ.	Max.	IF=mA	Min.	Typ.	2θ ½

1.00mm×0.50mm×0.40mm (0402) Single Color White Chip LED

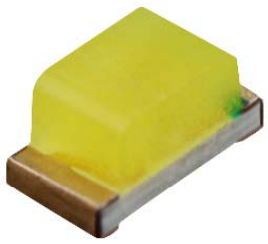

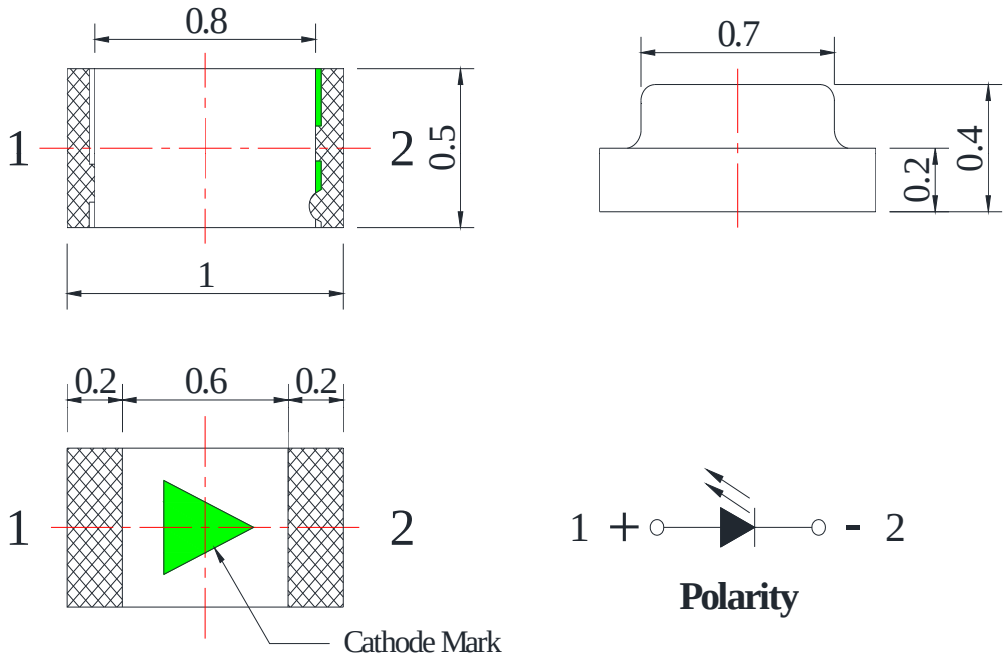

S162W-W2-1CC	InGaN	Cool White	x=0.28	y=0.28	Yellow Diffused	3.20	3.60	20	500	750	120

1.00mm×0.50mm×0.45mm (0402) Single Color White Chip LED

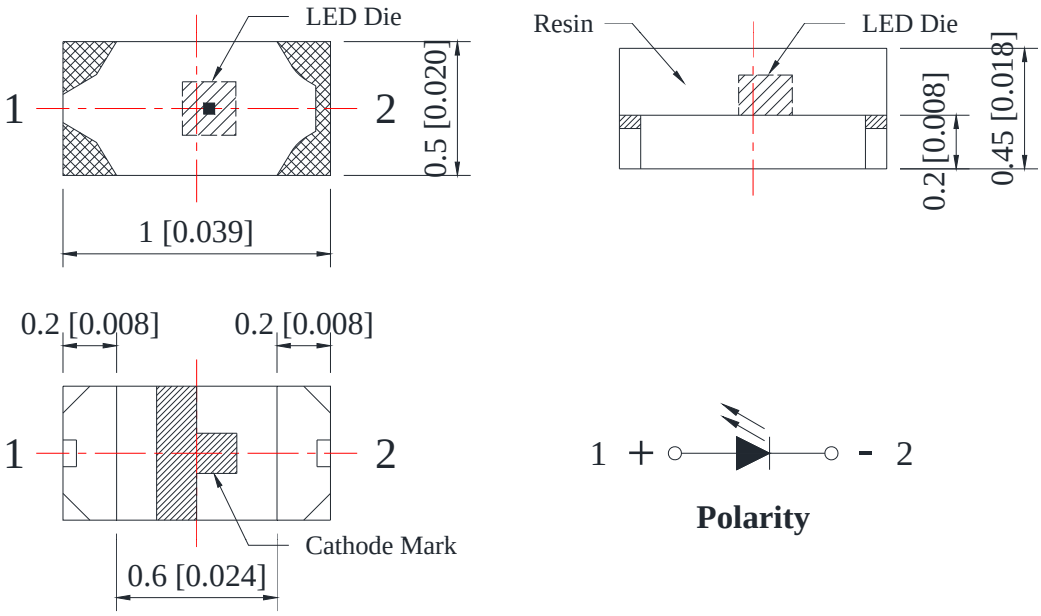

S160W-W2-1CS	InGaN	Cool White	x=0.30	y=0.31	Yellow Diffused	3.20	3.60	20	400	600	120

Part Number	Chip Material	Emitting Color	λp (nm) / x	λd (nm) / y	Lens Color	VF (V)		IV (mcd)			Viewing Angle
						Typ.	Max.	IF=mA	Min.	Typ.	2θ ½

3.20mm×1.60mm×1.10mm With Inner Lens Single Color White Chip LED

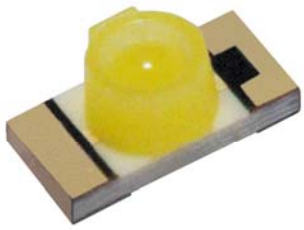

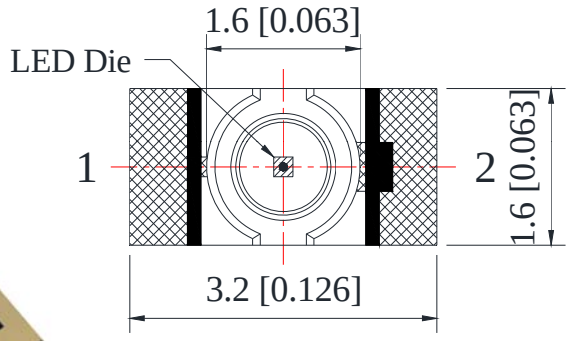

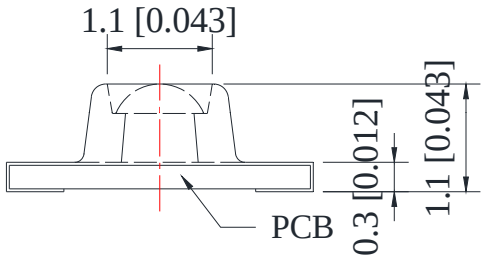

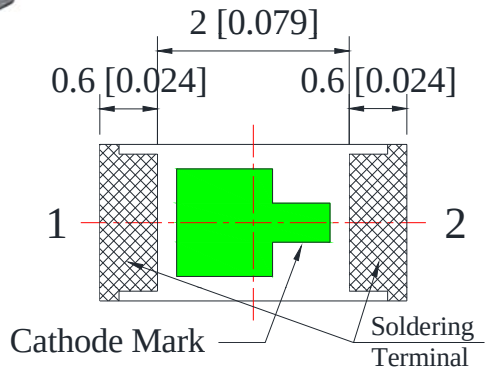

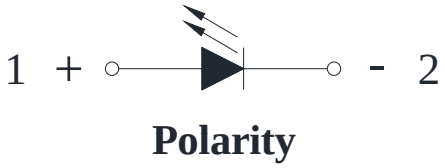

S35EW-W2-1CE	InGaN	Cool White	x=0.31	y=0.32	Yellow Diffused	3.20	3.60	20	200	450	120

3.20mm×2.40mm×2.50mm 1.80mm Round Subminiature Single Color White Chip LED

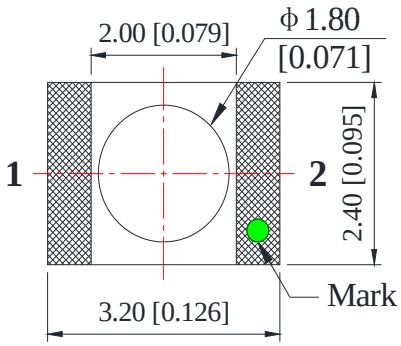

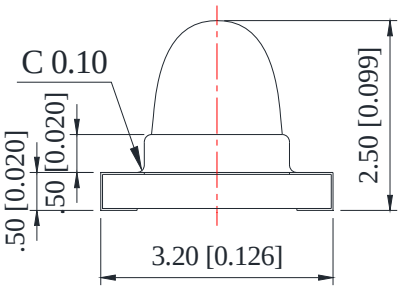

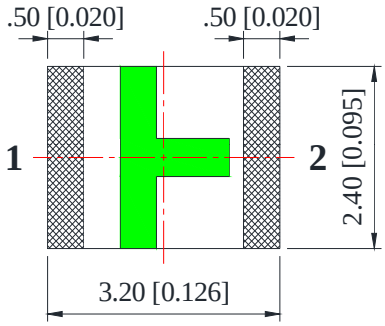

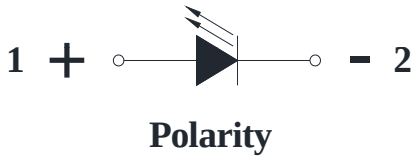

SR180W-W2-1C	InGaN	Cool White	x=0.31	y=0.32	Yellow Diffused	3.20	3.60	20	150	250	160

Part Number	Chip Material	Emitting Color	λp (nm) / x	λd (nm) / y	Lens Color	VF (V)		IV (mcd)			Viewing Angle
						Typ.	Max.	IF=mA	Min.	Typ.	2θ ½

3.20mm×1.00mm×1.50mm With Right Lens Single Color White Chip LED

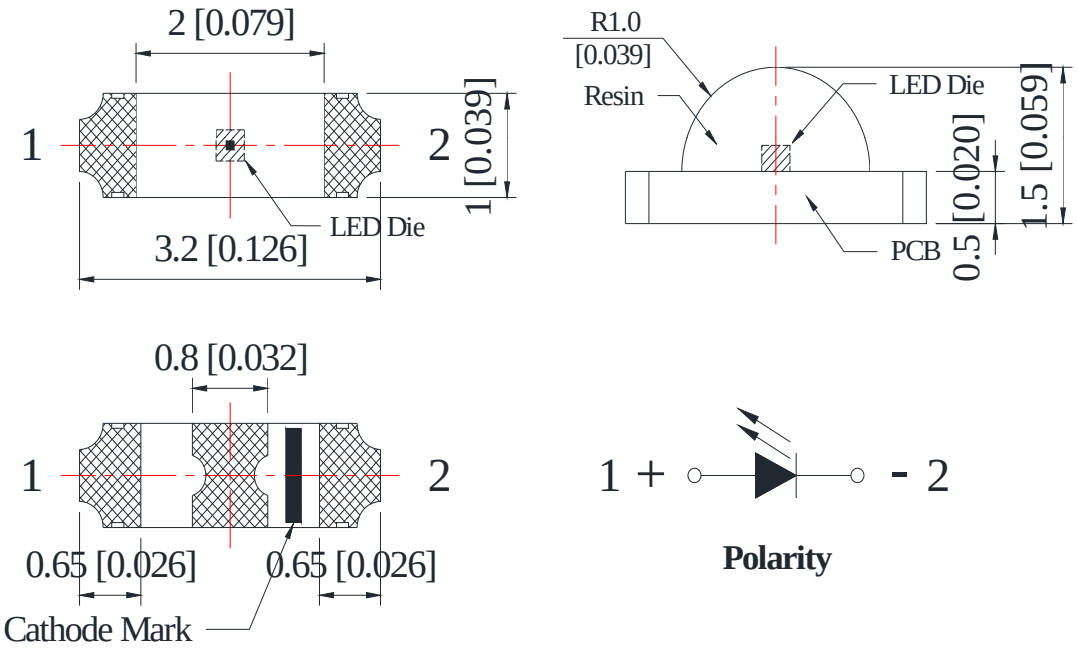

S110W-W2-1CS	InGaN	Cool White	x=0.30	y=0.30	Yellow Diffused	3.20	3.60	20	500	800	120

3.00mm×1.00mm×1.9mm With Right Lens Single Color White Chip LED

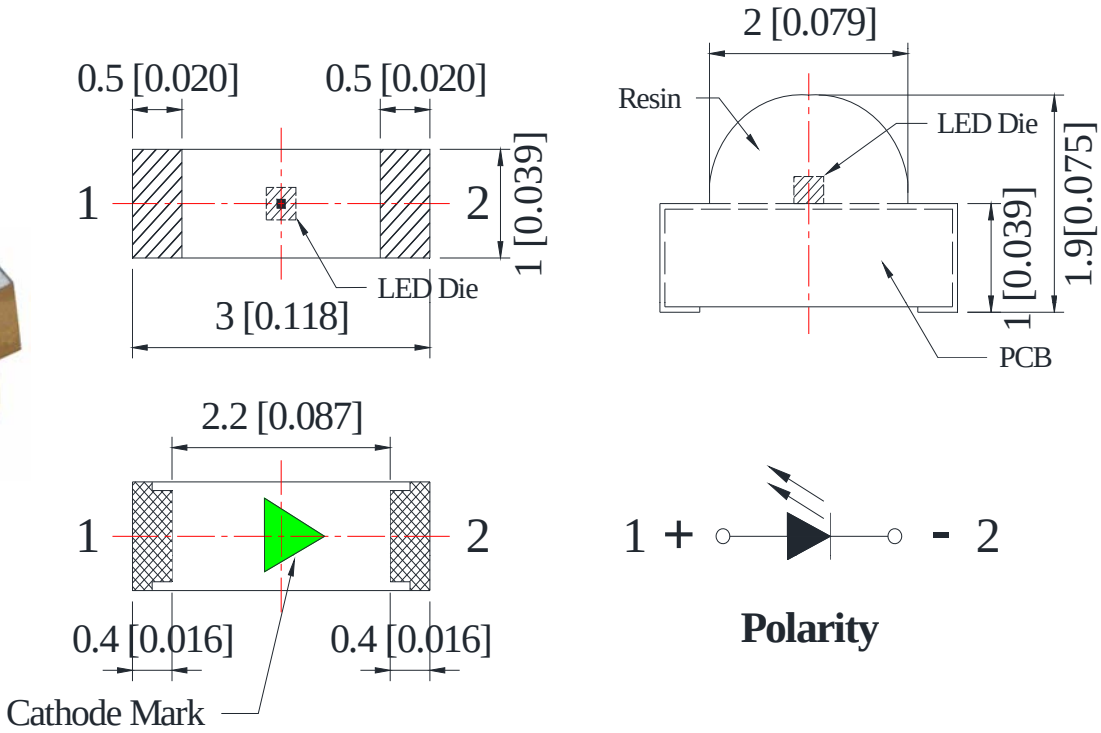

S11PW-W2-1CC	InGaN	Cool White	x=0.295	y=0.280	Yellow Diffused	3.20	3.60	20	400	550	120

Part Number	Chip Material	Emitting Color	λp (nm) / x	λd (nm) / y	Lens Color	VF (V)		IV (mcd)			Viewing Angle
						Typ.	Max.	IF=mA	Min.	Typ.	2θ ½

2.10mm×0.60mm×1.00mm With Right Lens Single Color White Chip LED

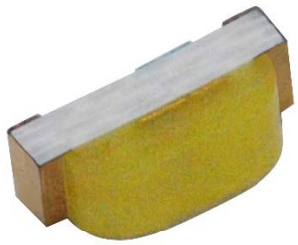

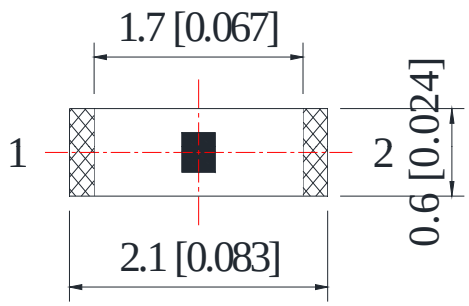

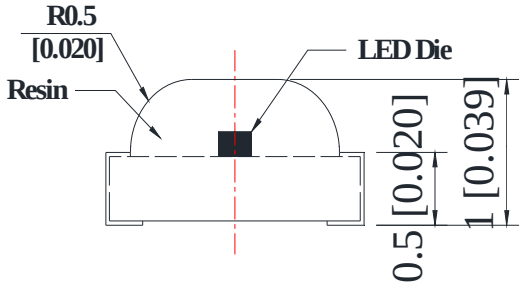

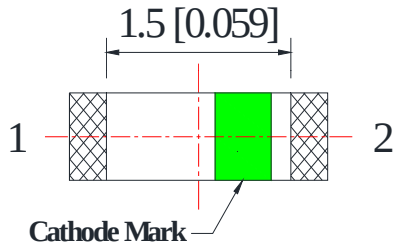

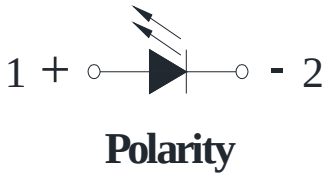

S11FW-W2-1CC	InGaN	Cool White	x=0.26	y=0.24	Yellow Diffused	3.20	3.60	20	400	500	130

2.80mm×1.20mm×0.80mm PLCC-2 Side View Single Color White LED

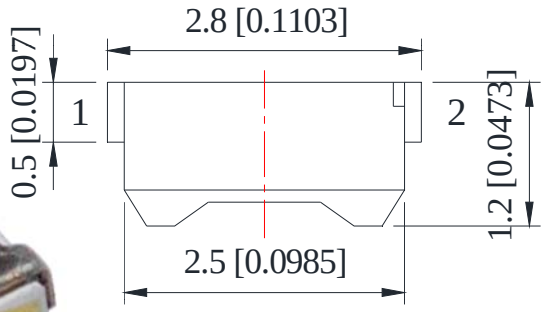

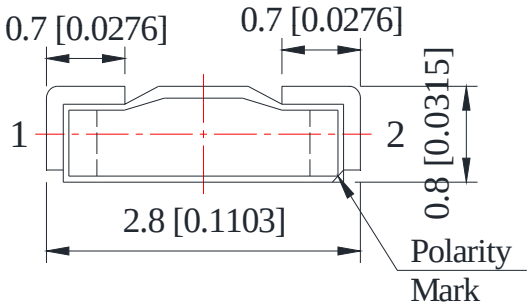

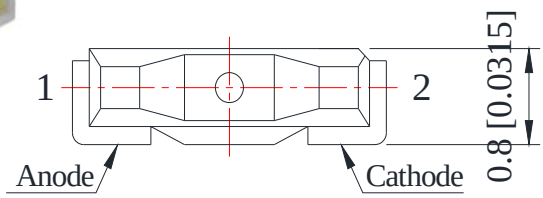

V213W-W2-1C-Y	InGaN	Cool White	x=0.30	y=0.30	Yellow Diffused	3.20	3.60	20	1200	1600	120

Part Number	Chip Material	Emitting Color	λp (nm) / x	λd (nm) / y	Lens Color	VF (V)		IV (mcd)			Viewing Angle
						Typ.	Max.	IF=mA	Min.	Typ.	2θ ½

3.80mm×1.00mm×0.60mm PLCC-2 Side View Single Color White LED

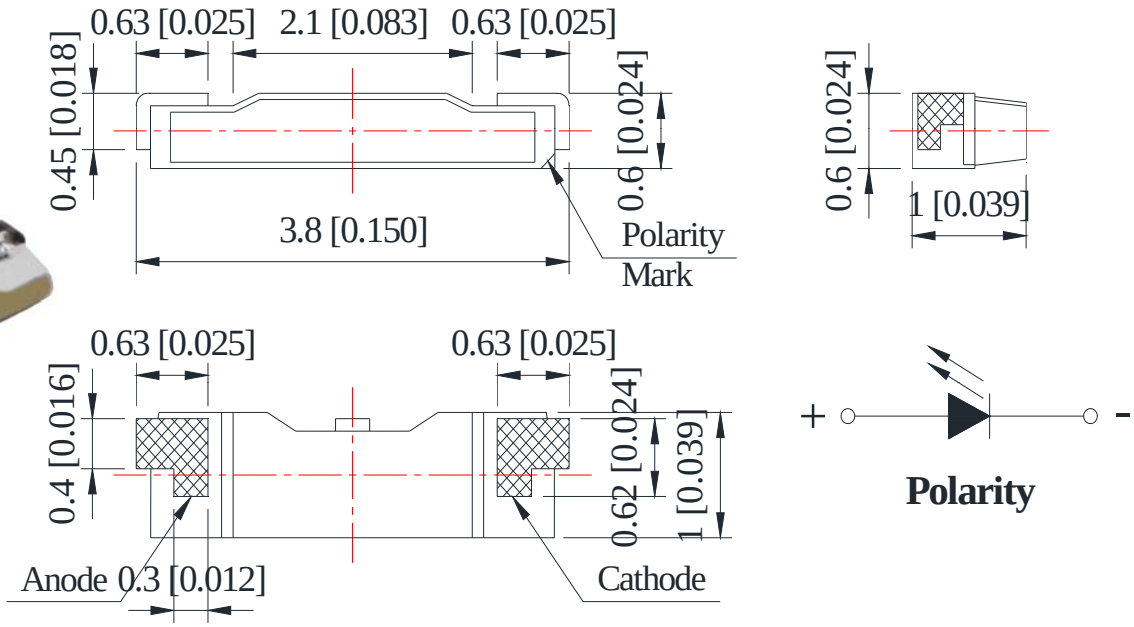

V020W-1R2	InGaN	Cool White	x=0.27	y=0.27	Yellow Diffused	3.20	3.60	20	2300	3200	120

4.00mm×1.40mm×0.80mm PLCC-2 Side View Single Color White LED

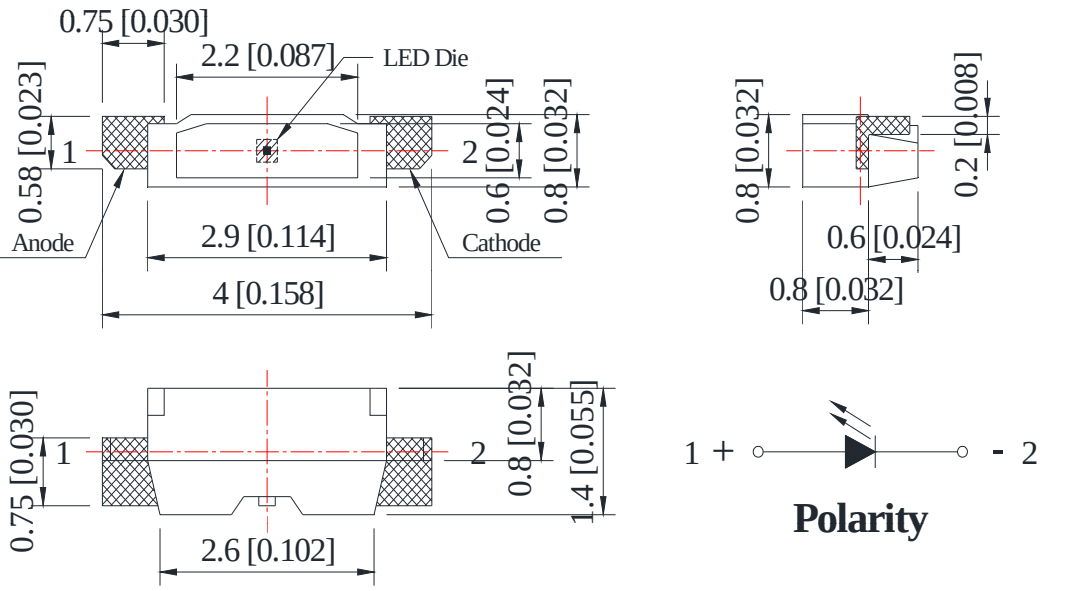

V335W-1R2	InGaN	Cool White	x=0.31	y=0.32	Yellow Diffused	3.20	3.60	20	1000	1800	120

Part Number	Chip Material	Emitting Color	λp (nm) / x	λd (nm) / y	Lens Color	VF (V)		IV (mcd)			Viewing Angle
						Typ.	Max.	IF=mA	Min.	Typ.	2θ ½

3.00mm×2.00mm×1.30mm PLCC-2 Top View Single Color White LED

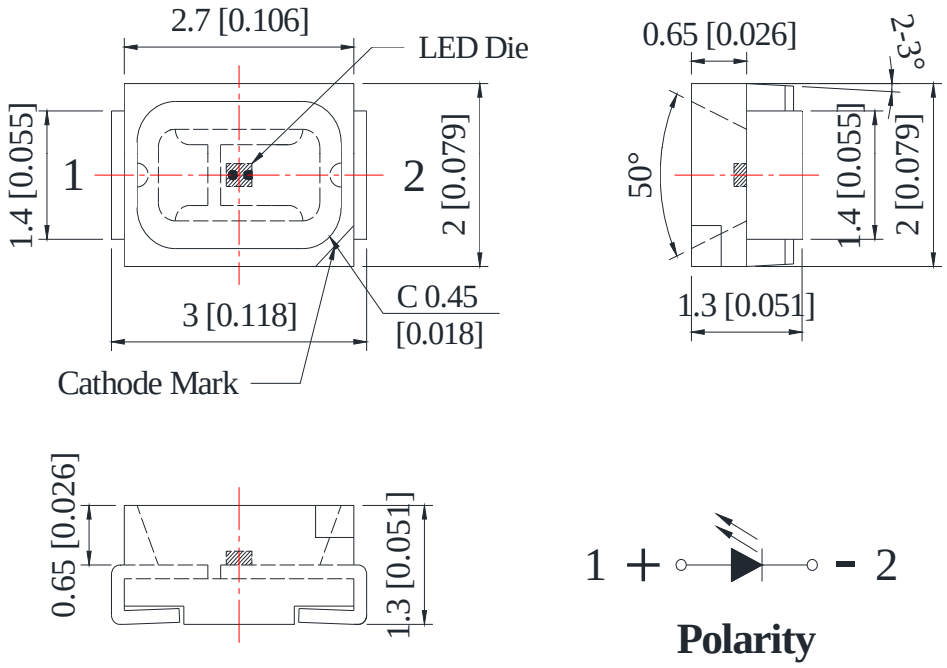

R3020W-W2-1F	InGaN	Cool White	x=0.31	y=0.32	Yellow Diffused	3.20	3.60	20	1800	2300	130
R3020W-W6-1F	InGaN	Warm White	x=0.43	y=0.40		3.20	3.60		1800	2100	

3.50mm×2.80mm×1.90mm PLCC-2 Top View Single Color White LED

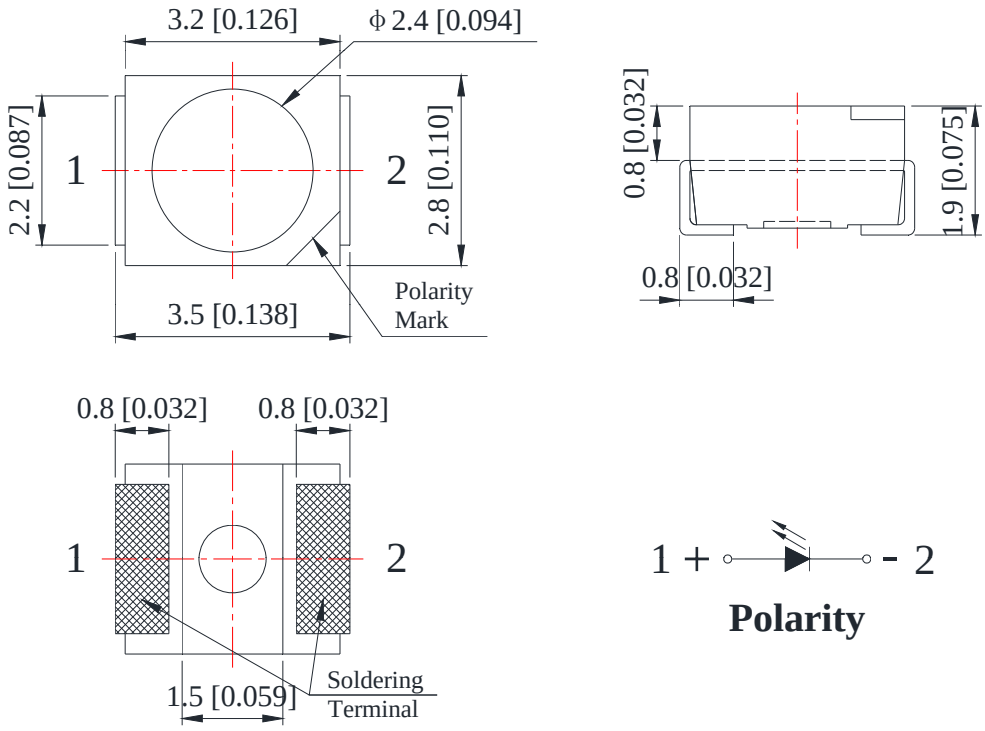

R3528W-W2-1F	InGaN	Cool White	x=0.31	y=0.32	Yellow Diffused	3.20	3.60	20	2000	2500	120
R3528W-W6-1F	InGaN	Warm White	x=0.43	y=0.40		3.20	3.60		2000	2300	

Part Number	Chip Material	Emitting Color	λp (nm) / x	λd (nm) / y	Lens Color	VF (V)		IV (mcd)			Viewing Angle
						Typ.	Max.	IF=mA	Min.	Typ.	2θ ½

5.00mm×5.50mm×1.50mm PLCC-6 Top View Single Color White LED

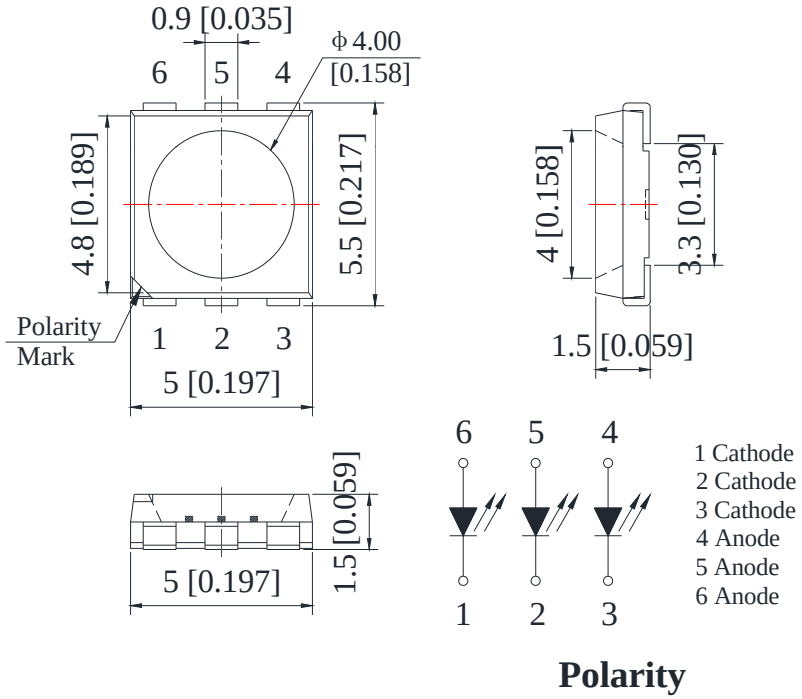

R5050W-W2-3A	InGaN	Cool White	x=0.31	y=0.32	Yellow Diffused	3.20	3.60	20×3	5800	6500	120
R5050W-W6-3A	InGaN	Warm White	x=0.43	y=0.40		3.20	3.60		5800	6300	

3.20mm×1.60mm×1.10mm Reverse Package Single Color Chip LED

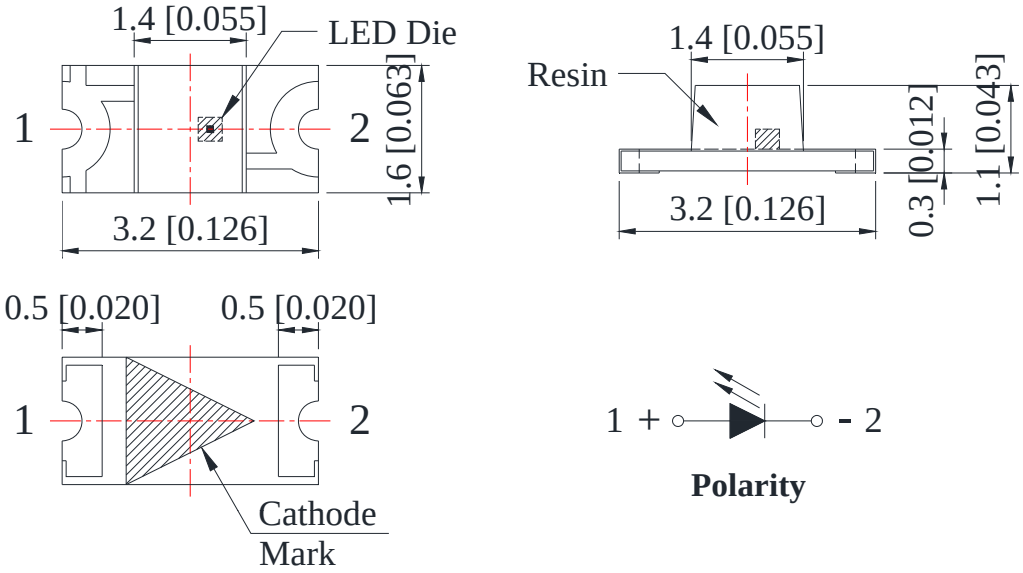

S15AVC-2BE	AlGaInP	Super Bright Red	632	624	Water Clear	2.00	2.40	20	25	60	130
S15AYC-2BE	AlGaInP	Super Bright Yellow	592	590		2.00	2.40		25	60	
S15AGC-2BE	AlGaInP	Yellow Green	575	573		2.00	2.40		15	30	
S15APGC-G5-1BE	InGaN	Pure Green	520	525		3.20	3.60		100	250	
S15ABC-B4-1BE	InGaN	Blue	468	470		3.20	3.60		25	50	

Part Number	Chip Material	Emitting Color	λp (nm) / x	λd (nm) / y	Lens Color	VF (V)		IV (mcd)			Viewing Angle
						Typ.	Max.	IF=mA	Min.	Typ.	2θ ½

3.20mm×1.60mm×1.10mm Reverse Package Single Color Chip LED

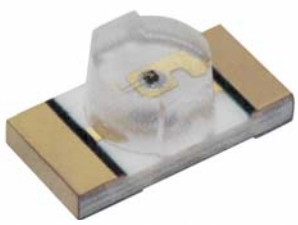

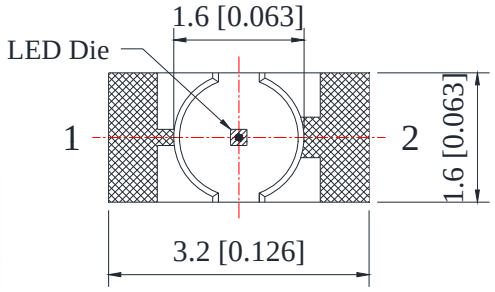

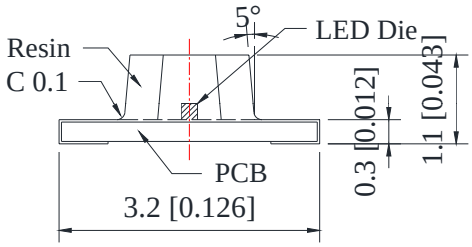

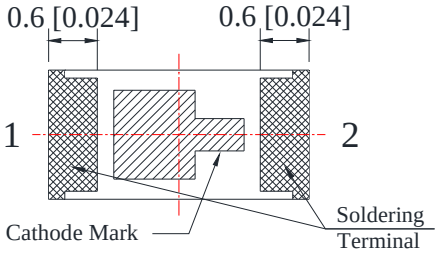

Polarity

S15BVC-2BE	AlGaInP	Super Bright Red	632	624	Water Clear	2.00	2.40	20	25	60	130
S15BYC-2BE	AlGaInP	Super Bright Yellow	592	590		2.00	2.40		25	60	
S15BGC-2BE	AlGaInP	Yellow Green	575	573		2.00	2.40		15	30	
S15BPGC-G5-1BE	InGaN	Pure Green	520	525		3.20	3.60		100	250	
S15BBC-B4-1BE	InGaN	Blue	468	470		3.20	3.60		25	50	

3.20mm×1.25mm×1.10mm Reverse Package Single Color Chip LED

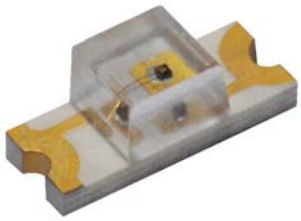

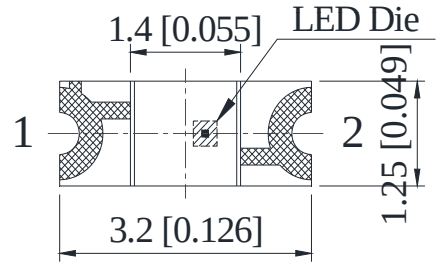

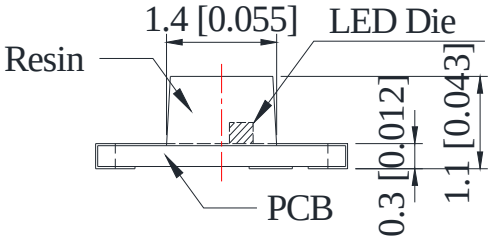

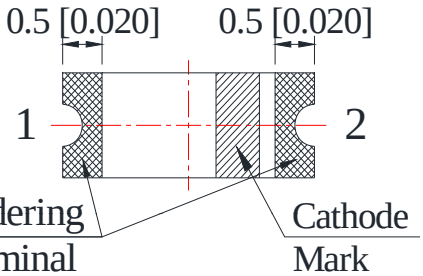

Polarity

S15CVC-2BE	AlGaInP	Super Bright Red	632	624	Water Clear	2.00	2.40	20	25	60	130
S15CYC-2BE	AlGaInP	Super Bright Yellow	592	590		2.00	2.40		25	60	
S15CGC-2BE	AlGaInP	Yellow Green	575	573		2.00	2.40		15	30	
S15CPGC-G5-1BE	InGaN	Pure Green	520	525		3.20	3.60		100	250	
S15CBC-B4-1BE	InGaN	Blue	468	470		3.20	3.60		25	50	

Part Number	Chip Material	Emitting Color	λp (nm) / x	λd (nm) / y	Lens Color	VF (V)		IV (mcd) / ΦV (lm)			Viewing Angle
						Typ.	Max.	IF=mA	Min.	Typ.	2θ ½

3.20mm×1.60mm×1.10mm With Inner Lens Single Color Chip LED

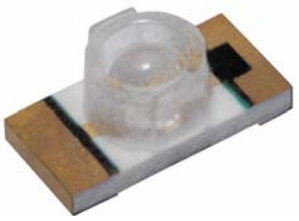

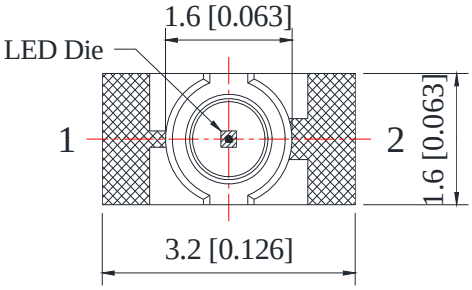

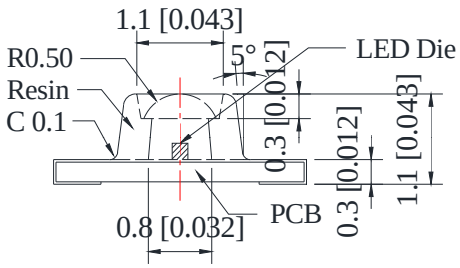

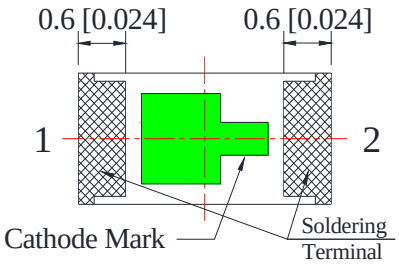

S35EVC-2BE	AlGaInP	Super Bright Red	632	624	Water Clear	2.00	2.40	20	100	200	60
S35EYC-2BE	AlGaInP	Super Bright Yellow	592	590		2.00	2.40		100	200	
S35EGC-2BE	AlGaInP	Yellow Green	575	573		2.00	2.40		40	80	
S35EPGC-G5-1BE	InGaN	Pure Green	520	525		3.20	3.60		300	600	
S35EBC-B4-1BE	InGaN	Blue	468	470		3.20	3.60		80	120	

3.20mm×1.60mm×1.90mm 1.60mm Round Subminiature Reverse Package Single Color Chip LED

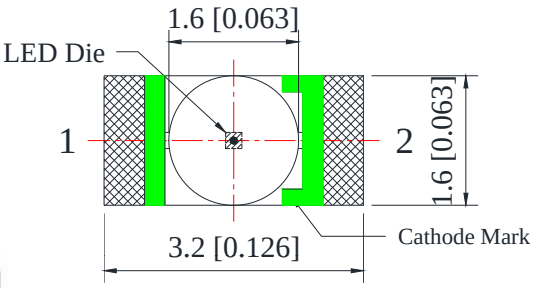

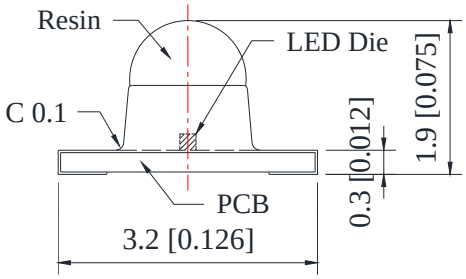

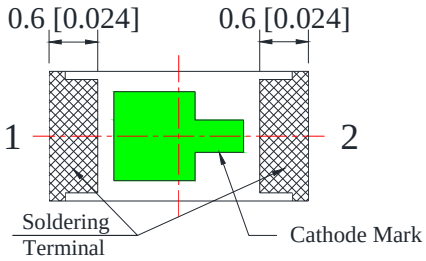

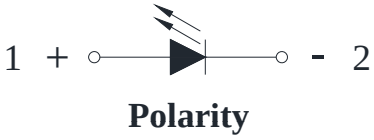

SR160VC-2BE	AlGaInP	Super Bright Red	632	624	Water Clear	2.00	2.40	20	400	650	30
SR160AC-2BE	AlGaInP	Super Bright Orange	610	605		2.00	2.40		750	1000	
SR160YC-2BE	AlGaInP	Super Bright Yellow	592	590		2.00	2.40		350	700	
SR160GC-2BE	AlGaInP	Yellow Green	575	573		2.00	2.40		250	350	
SR160PGC-G5-1BE	InGaN	Pure Green	520	525		3.20	3.60		1000	1500	
SR160BC-B4-1BE	InGaN	Blue	468	470		3.20	3.60		500	750	

Part Number	Chip Material	Emitting Color	λp (nm) / x	λd (nm) / y	Lens Color	VF (V)		IV (mcd) / ΦV (lm)			Viewing Angle
						Typ.	Max.	IF=mA	Min.	Typ.	2θ ½

3.20mm×1.00mm×1.50mm With Right Lens Single Color Chip LED

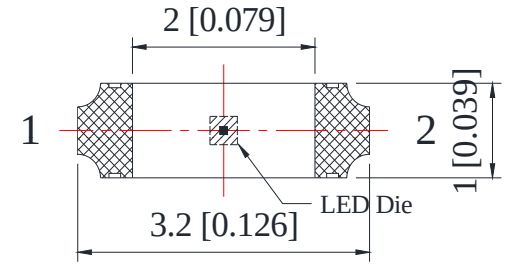

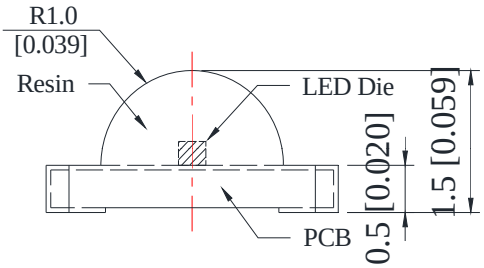

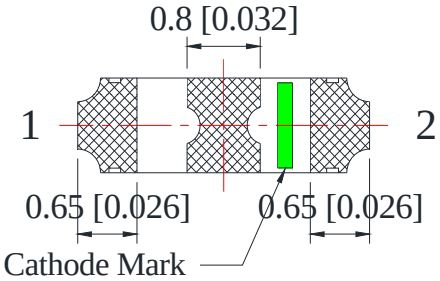

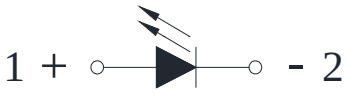

Polarity

S110VC-2BS	AlGaInP	Super Bright Red	632	624	Water Clear	2.00	2.40	20	100	150	120
S110YC-2BS	AlGaInP	Super Bright Yellow	592	590		2.00	2.40		100	150	
S110GC-2BS	AlGaInP	Yellow Green	575	573		2.00	2.40		20	45	
S110PGC-G5-1BS	InGaN	Pure Green	520	525		3.20	3.60		300	600	
S110BC-B4-1BS	InGaN	Blue	468	470		3.20	3.60		80	120	

3.00mm×1.00mm×2.00mm With Right Lens Single Color Chip LED

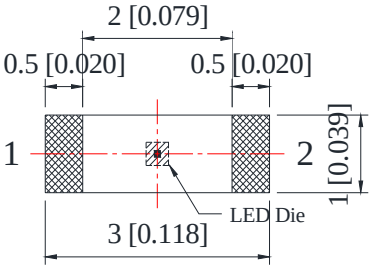

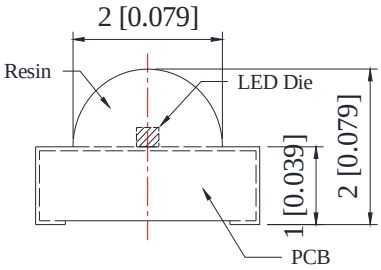

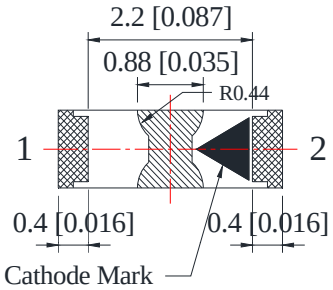

Polarity

S11PVC-2BE	AlGaInP	Super Bright Red	632	624	Water Clear	2.00	2.40	20	50	100	120
S11PAC-2AE	AlGaInP	Super Bright Orange	610	605		2.00	2.40		90	150	
S11PYC-2BE	AlGaInP	Super Bright Yellow	592	590		2.00	2.40		60	120	
S11PGC-2BE	AlGaInP	Yellow Green	575	573		2.00	2.40		25	40	
S11PPGC-G5-1BE	InGaN	Pure Green	520	525		3.20	3.60		100	250	
S11PBC-B4-1BE	InGaN	Blue	468	470		3.20	3.60		40	80	

Part Number	Chip Material	Emitting Color	λp (nm) / x	λd (nm) / y	Lens Color	VF (V)		IV (mcd)			Viewing Angle
						Typ.	Max.	IF=mA	Min.	Typ.	2θ ½

2.10mm×0.60mm×1.00mm With Right Lens Single Color Chip LED

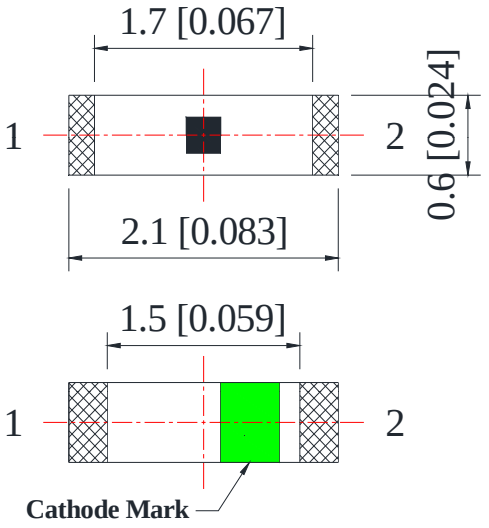

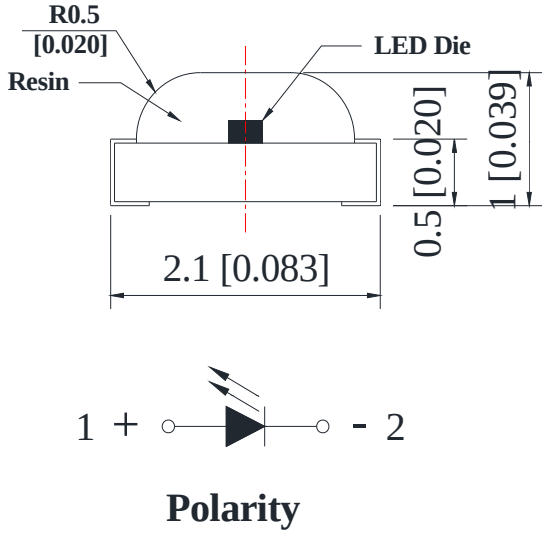

S11FVC-2BJ	AlGaInP	Super Bright Red	632	624	Water Clear	2.00	2.40	20	80	120	130
S11FYC-2BJ	AlGaInP	Super Bright Yellow	592	590		2.00	2.40		80	120	
S11FGC-2BJ	AlGaInP	Yellow Green	575	573		2.00	2.40		15	30	
S11FPGC-G5-1BJ	InGaN	Pure Green	520	525		3.20	3.60		350	500	
S11FBC-B4-1BJ	InGaN	Blue	468	470		3.20	3.60		100	160	

3.80mm×1.00mm×0.60mm PLCC-2 Side View Single Color LED

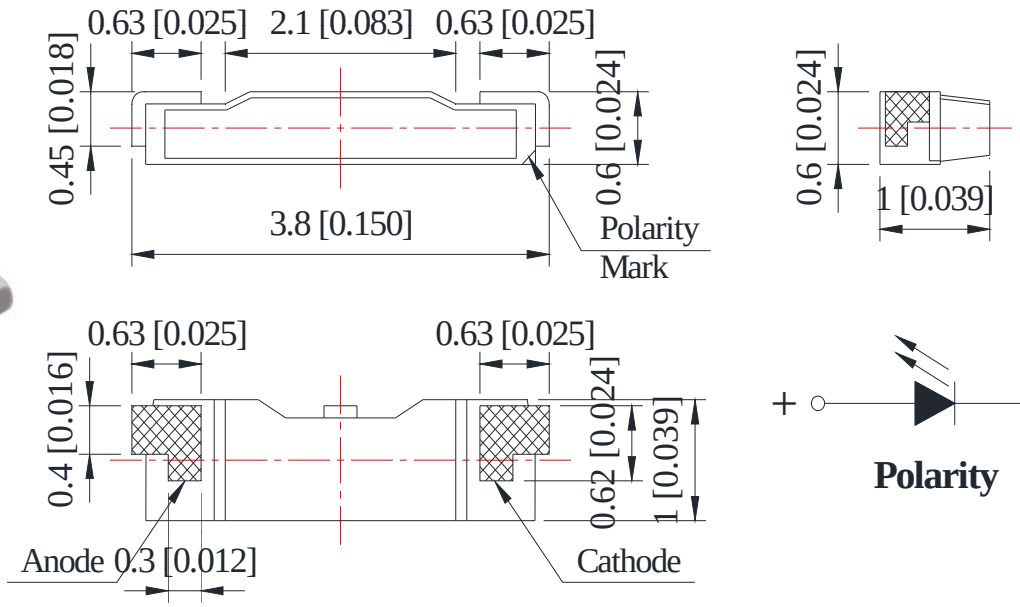

V020V-4R	AlGaInP	Super Bright Red	632	624	Water Clear	2.00	2.40	20	300	500	120
V020Y-4R	AlGaInP	Super Bright Yellow	592	590		2.00	2.40		400	550	
V020PG-1R5	InGaN	Pure Green	520	525		3.20	3.60		1000	1800	
V020B-1R4	InGaN	Blue	468	470		3.20	3.60		200	450	

Part Number	Chip Material	Emitting Color	λp (nm) / x	λd (nm) / y	Lens Color	VF (V)		IV (mcd)			Viewing Angle
						Typ.	Max.	IF=mA	Min.	Typ.	2θ ½

4.00mm×1.40mm×0.80mm PLCC-2 Side View Single Color LED

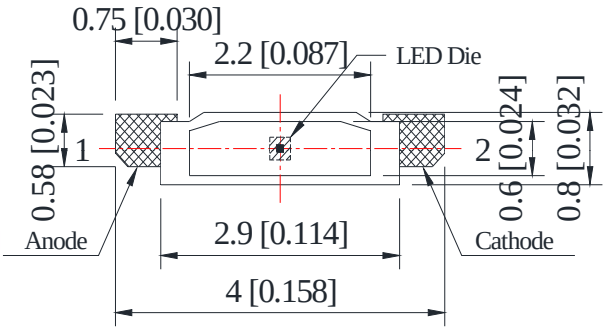

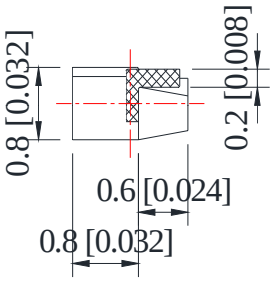

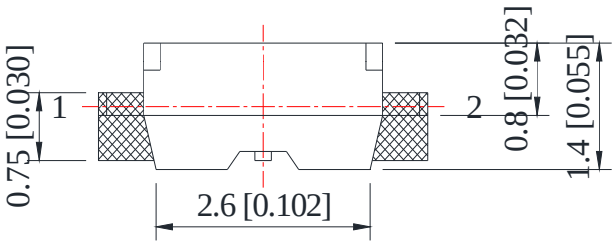

V335V-4R	AlGaInP	Super Bright Red	632	624	Water Clear	2.00	2.40	20	300	500	120
V335A-4R	AlGaInP	Super Bright Orange	610	605		2.00	2.40		300	500	
V335Y-4R	AlGaInP	Super Bright Yellow	592	590		2.00	2.40		400	550	
V335G-2R	AlGaInP	Yellow Green	573	571		2.00	2.40		40	70	
V335PG-1R5	InGaN	Pure Green	520	525		3.20	3.60		900	1300	
V335B-1R4	InGaN	Blue	468	470		3.20	3.60		150	300	

3.80mm×0.60mm×1.00mm PLCC-4 Side View Multi-Color LED

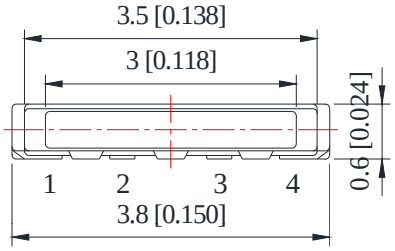

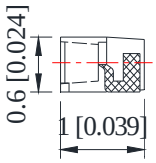

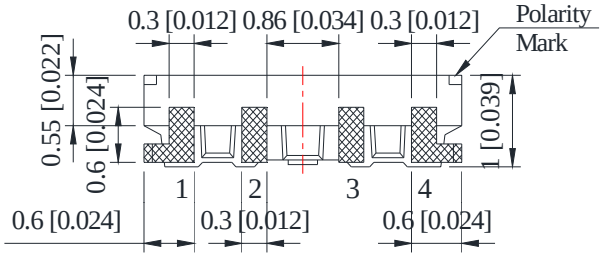

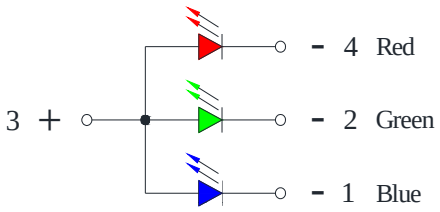

Polarity

V3806RGBC-001	AlGaInP	Super Bright Red	632	624	Water Clear	2.00	2.40	20	650	750	120
	InGaN	Pure Green	520	525		3.20	3.60		1300	1500	
	InGaN	Blue	468	470		3.20	3.60		350	450	

Part Number	Chip Material	Emitting Color	λp (nm) / x	λd (nm) / y	Lens Color	VF (V)		IV (mcd)			Viewing Angle
						Typ.	Max.	IF=mA	Min.	Typ.	2θ ½

4.30mm×1.10mm×0.90mm PLCC-4 Side View Multi-Color LED

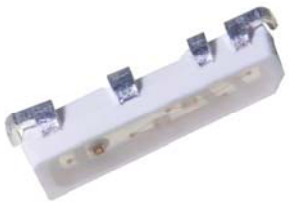

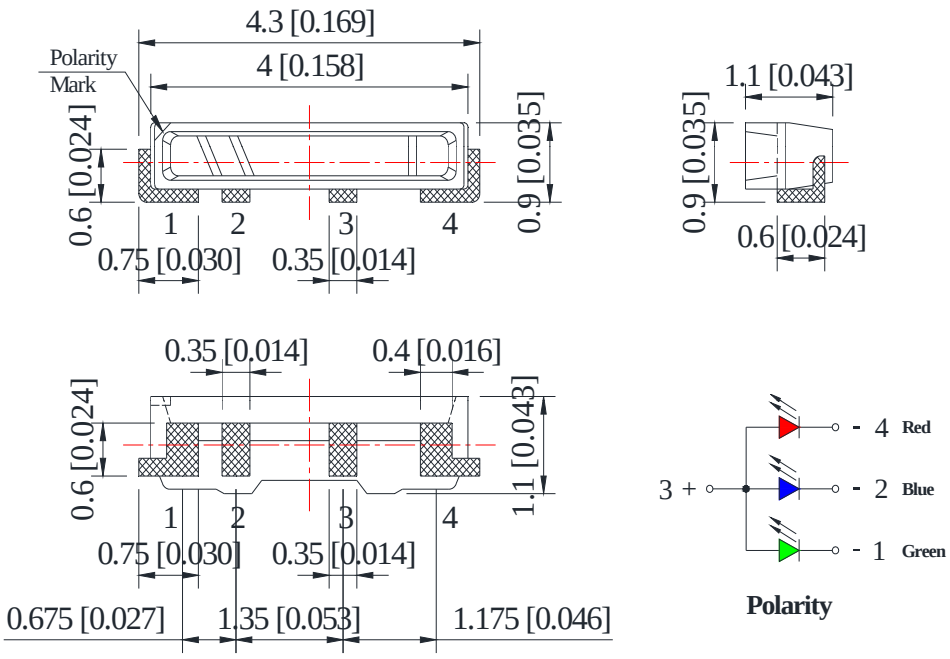

V4309RGBC-A-01M	AlGaInP	Super Bright Red	632	624	Water Clear	1.80	2.10	5	100	150	120
	InGaN	Pure Green	520	525		2.80	3.10		400	600	
	InGaN	Blue	468	470		2.80	3.10		80	150	

4.50mm×1.25mm×0.90mm PLCC-6 Side View Multi-Color LED

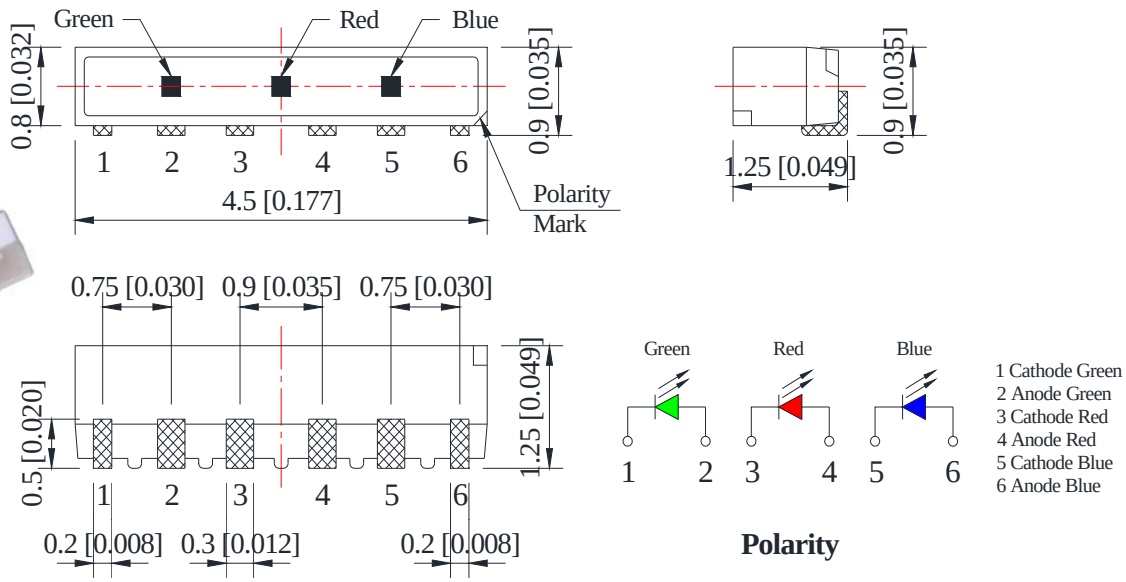

V4509RGBC-01M	AlGaInP	Super Bright Red	632	624	Water Clear	1.80	2.10	5	100	150	120
	InGaN	Pure Green	520	525		2.80	3.10		400	600	
	InGaN	Blue	468	470		2.80	3.10		80	150	

Part Number	Chip Material	Emitting Color	λp (nm) / x	λd (nm) / y	Lens Color	VF (V)		IV (mcd) / ΦV (lm)			Viewing Angle
						Typ.	Max.	IF=mA	Min.	Typ.	2θ ½

2.00mm×1.80mm×0.85mm (0807) Multi-Color Blinking Chip LED

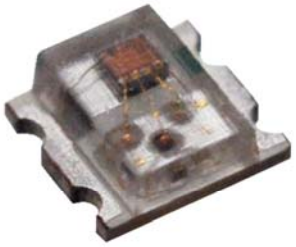

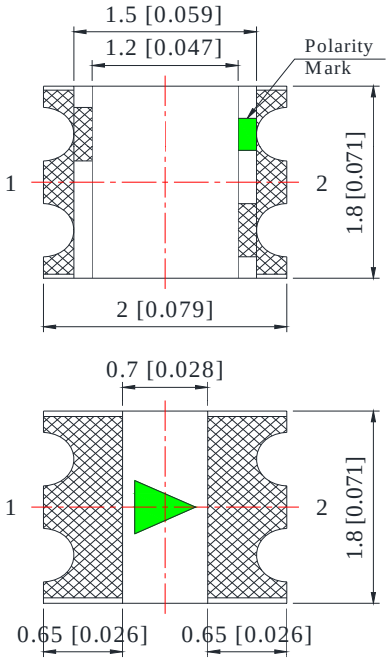

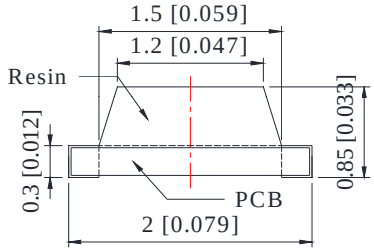

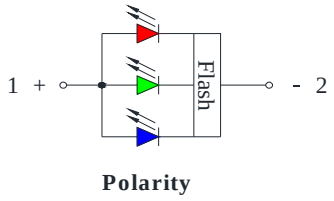

FS197ERGBC-F2	AlGaInP	Super Bright Red	632	624	Water Clear	3.00	3.50	20	80	150	120
	InGaN	Pure Green	520	525					250	500	
	InGaN	Blue	468	470					150	200	

1.55mm×1.50mm×1.00mm PLCC-4 Top View Multi-Color LED

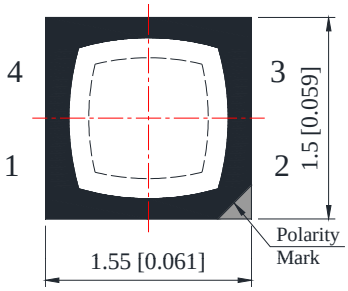

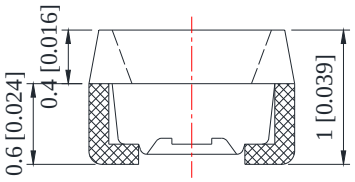

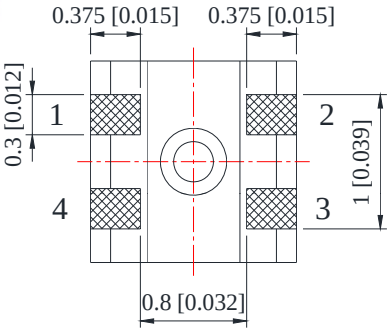

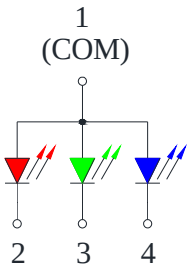

1 Common Anode
2 Cathode Red
3 Cathode Green
4 Cathode Blue

Polarity

R1515RGBM-008-AB-RS	AlGaInP	Super Bright Red	632	624	White Diffused	2.00	2.40	8	30	55	120
	InGaN	Pure Green	520	525		2.60	3.20	5	115	170	
	InGaN	Blue	468	470		2.60	3.20	3	12	17	

Part Number	Chip Material	Emitting Color	λp (nm) / x	λd (nm) / y	Lens Color	VF (V)		IV (mcd) / ΦV (lm)			Viewing Angle
						Typ.	Max.	IF=mA	Min.	Typ.	2θ ½

2.15mm×2.05mm×1.90mm PLCC-4 Top View Multi-Color LED

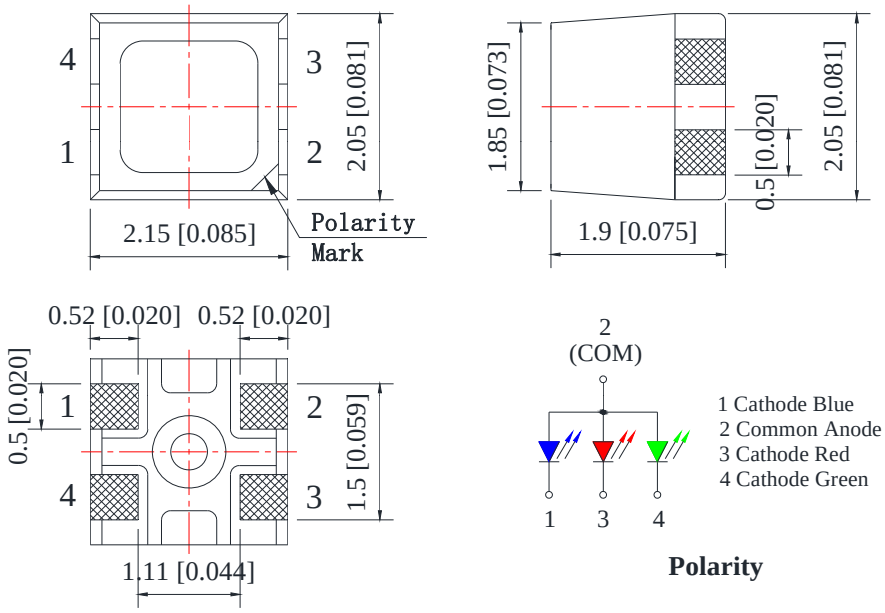

R2121RGBM-001-AB-RS	AlGaInP	Super Bright Red	632	624	White Diffused	2.00	2.40	15	230	350	120
	InGaN	Pure Green	520	525		2.70	3.30	8	350	500	
	InGaN	Blue	468	470		2.70	3.30	5	35	52	

2.80mm×2.70mm×2.45mm PLCC-6 Top View Multi-Color LED

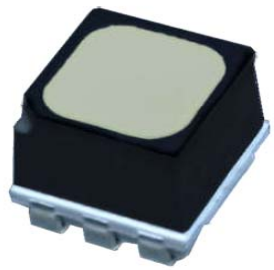

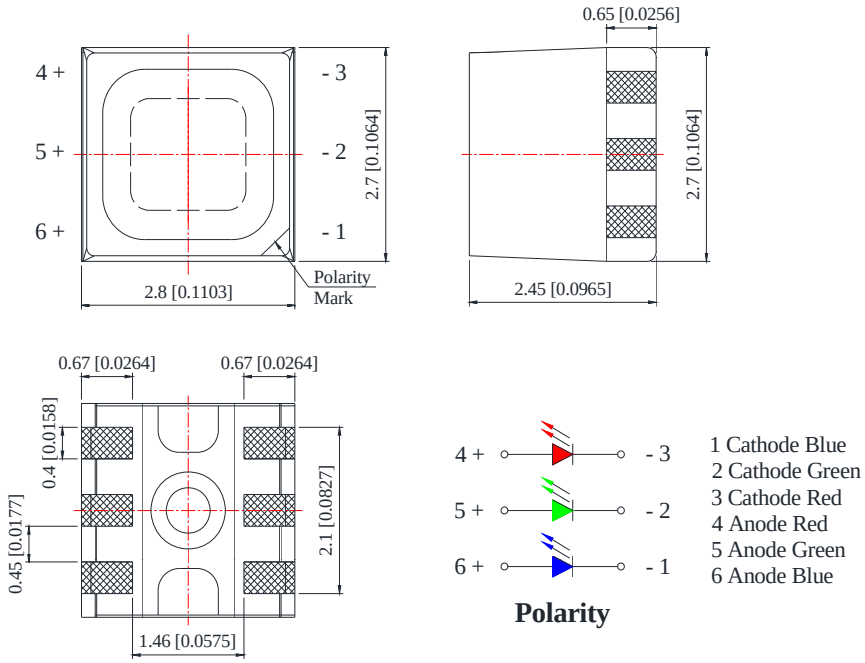

R2727RGBM-002-BRS	AlGaInP	Super Bright Red	632	624	White Diffused	2.00	2.40	20	600	860	120
	InGaN	Pure Green	520	525		2.80	3.30	15	1300	1800	
	InGaN	Blue	468	470		2.80	3.30	10	200	300	

Part Number	Chip Material	Emitting Color	λp (nm) / x	λd (nm) / y	Lens Color	VF (V)		IV (mcd) / ΦV (lm)			Viewing Angle
						Typ.	Max.	IF=mA	Min.	Typ.	2θ ½

3.70mm×3.50mm×2.80mm PLCC-6 Top View Multi-Color LED

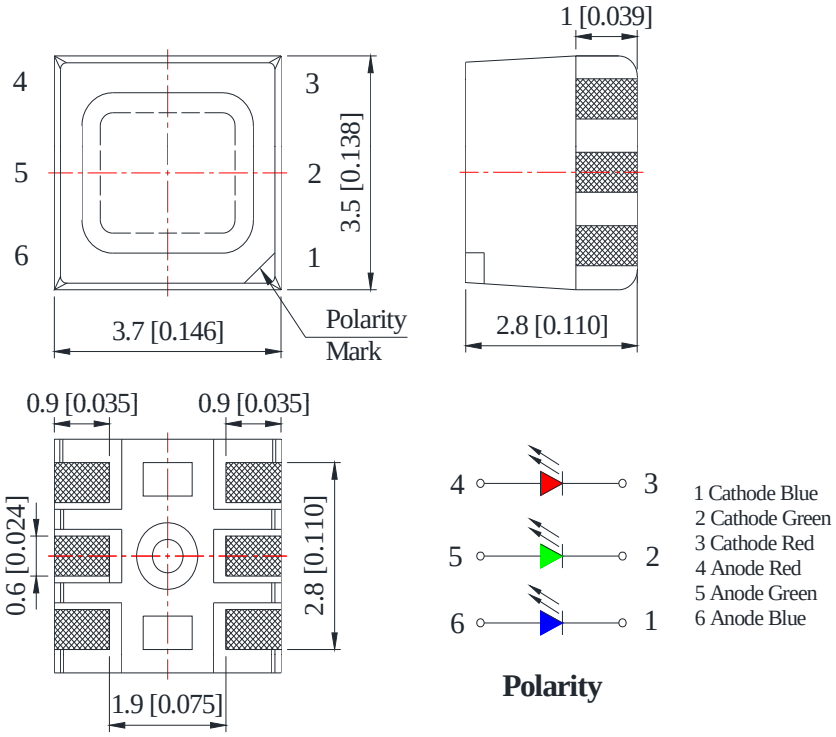

R3535RGBM-002-BRS	AlGaInP	Super Bright Red	632	624	White Diffused	2.00	2.40	15	380	550	120
	InGaN	Pure Green	520	525		2.70	3.30	8	560	850	
	InGaN	Blue	468	470		2.70	3.30	5	80	115	

2.70mm×2.40mm×1.10mm PLCC-4 Top View Multi-Color Intelligent Control LED

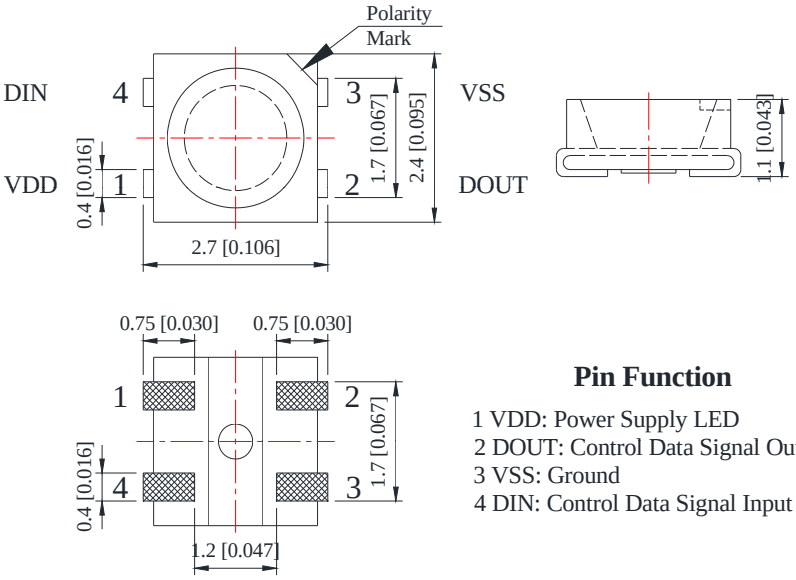

FR2724RGB4C-F1T	AlGaInP	Super Bright Red	632	624	Water Clear	+ 3.50 ~ + 5.50	20	300	600	120
	InGaN	Pure Green	520	525				800	1500	
	InGaN	Blue	468	470				200	400	

Part Number	Chip Material	Emitting Color	λp (nm) / x	λd (nm) / y	Lens Color	VF (V)		IV (mcd) / ΦV (lm)			Viewing Angle
						Typ.	Max.	IF=mA	Min.	Typ.	2θ ½

3.50mm×2.80mm×1.90mm PLCC-4 Top View Multi-Color Intelligent Control LED

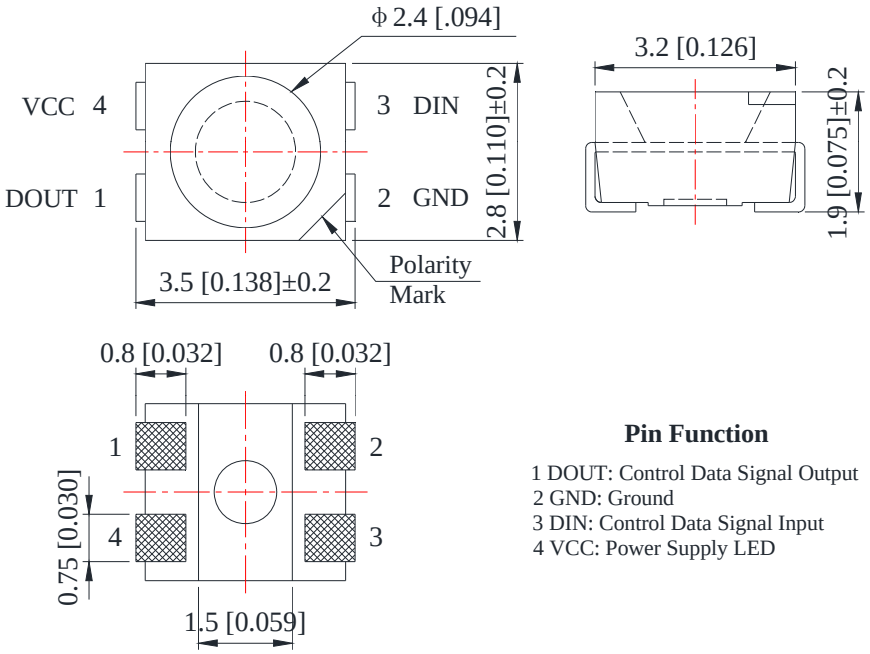

Pin Function

1 DOUT: Control Data Signal Output
2 GND: Ground
3 DIN: Control Data Signal Input
4 VCC: Power Supply LED

FR3528RGB4C-F1T	AlGaInP	Super Bright Red	632	624	Water Clear	+ 3.50 ~ + 5.50	12	200	400	120
	InGaN	Pure Green	520	525				800	1200	
	InGaN	Blue	468	470				150	300	

3.70mm×3.50mm×1.10mm PLCC-4 Top View Multi-Color Intelligent Control LED

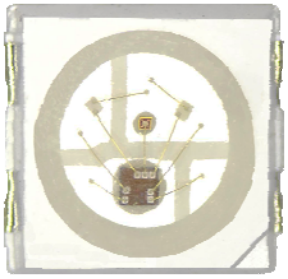

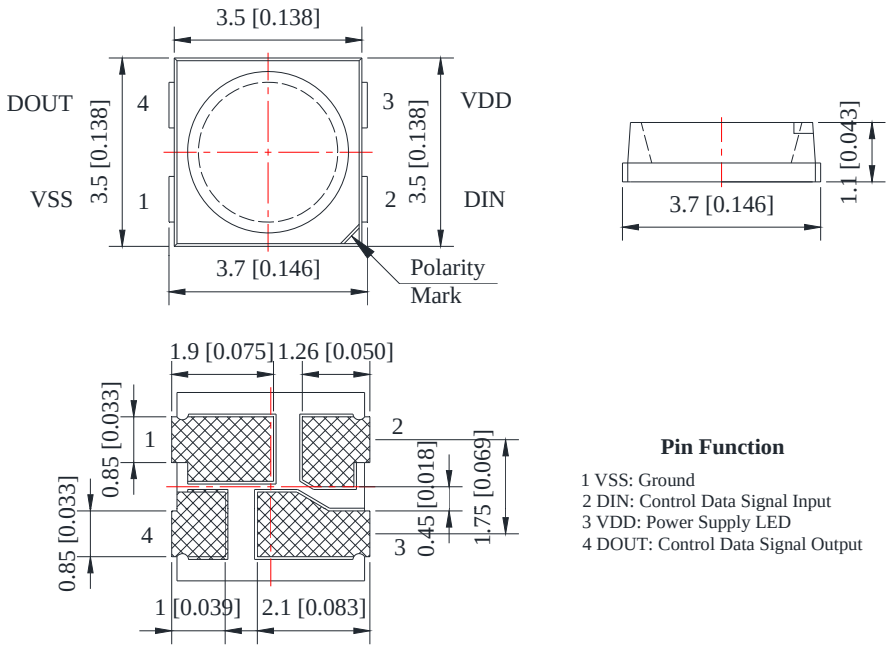

Pin Function

1 VSS: Ground
2 DIN: Control Data Signal Input
3 VDD: Power Supply LED
4 DOUT: Control Data Signal Output

FR3535RGB4C-F1-S	AlGaInP	Super Bright Red	632	624	Water Clear	+ 3.70 ~ + 5.50	12	400	600	120
	InGaN	Pure Green	520	525				1000	1500	
	InGaN	Blue	468	470				200	400	

Part Number	Chip Material	Emitting Color	λp (nm) / x	λd (nm) / y	Lens Color	VF (V)		IV (mcd) / ΦV (lm)			Viewing Angle
						Typ.	Max.	IF=mA	Min.	Typ.	2θ ½

5.50mm×5.00mm×1.60mm PLCC-4 Top View Multi-Color Intelligent Control LED

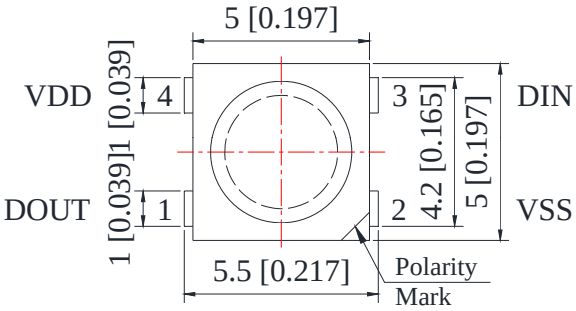

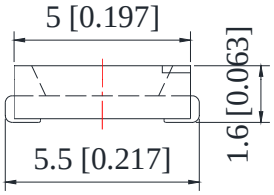

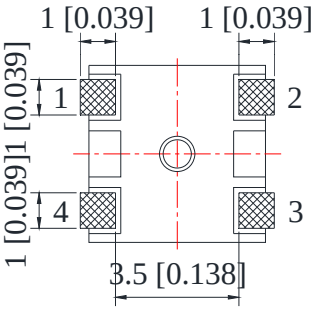

Pin Function

1 DOUT: Control Data Signal Output
2 VSS: Ground
3 DIN: Control Data Signal Input
4 VDD: Power Supply LED

FR5050RGB4C-F1A	AlGaInP	Super Bright Red	632	624	Water Clear	+ 3.50 ~ + 5.50	20	250	500	120
	InGaN	Pure Green	520	525				500	1500	
	InGaN	Blue	468	470				150	250	

1.60mm×1.50mm×0.60mm (0606) Multi-Color Intelligent Control LED

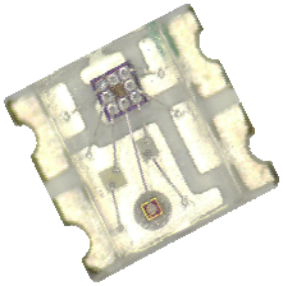

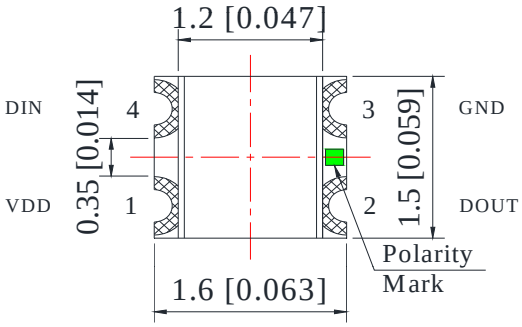

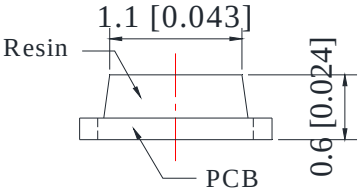

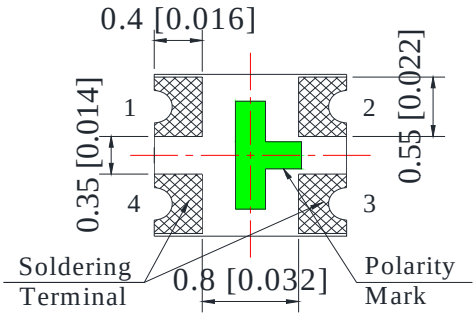

Pin Function

1 VDD: Power Supply LED
2 DOUT: Control Data Signal Output
3 GND: Ground
4 DIN: Control Data Signal Input

FS1615RGB4C-F1T	AlGaInP	Super Bright Red	632	624	Water Clear	+ 5.00	5	150	300	120
	InGaN	Pure Green	520	525				400	800	
	InGaN	Blue	468	470				100	200	

Part Number	Chip Material	Emitting Color	λp (nm) / x	λd (nm) / y	Lens Color	VF (V)		IV (mcd) / ΦV (lm)			Viewing Angle
						Typ.	Max.	IF=mA	Min.	Typ.	2θ ½

2.00mm×1.80mm×0.80mm (0807) Multi-Color Intelligent Control LED

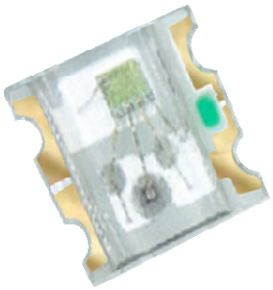

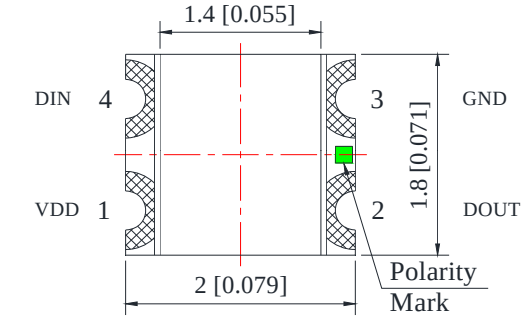

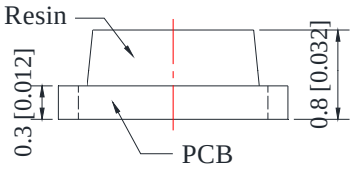

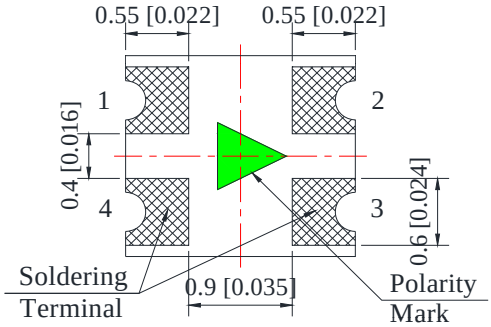

Pin Function

1 VDD: Power Supply LED
2 DOUT: Control Data Signal Output
3 GND: Ground
4 DIN: Control Data Signal Input

FS2018RGB4M-F1J	AlGaInP	Super Bright Red	632	624	White Diffused	+ 3.70 ~ + 5.50	12	80	120	120
	InGaN	Pure Green	520	525				250	500	
	InGaN	Blue	468	470				80	130	

2.00mm×2.00mm×0.65mm (0808) Multi-Color Intelligent Control LED

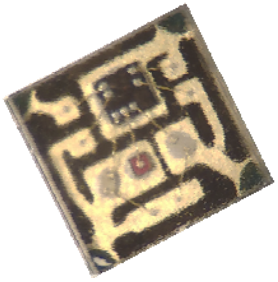

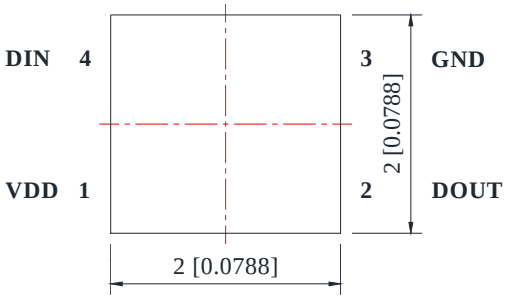

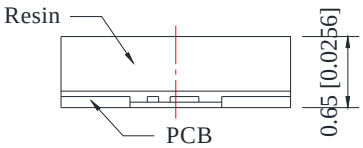

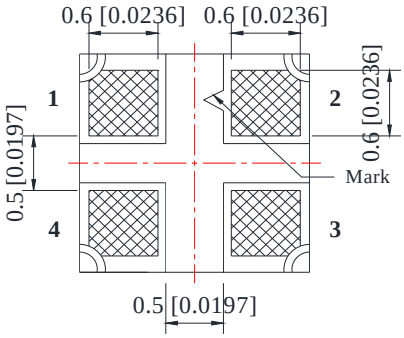

Pin Function

1 VDD: Power Supply LED
2 DOUT: Control Data Signal Output
3 GND: Ground
4 DIN: Control Data Signal Input

FS2020RGB4C-F1-S	AlGaInP	Super Bright Red	632	624	Water Clear	+ 3.70 ~ + 5.50	5	30	80	120
	InGaN	Pure Green	520	525				120	200	
	InGaN	Blue	468	470				20	70	

Part Number	Chip Material	Emitting Color	λp (nm) / x	λd (nm) / y	Lens Color	VF (V)		IV (mcd) / ΦV (lm)			Viewing Angle
						Typ.	Max.	IF=mA	Min.	Typ.	2θ ½

3.20mm×2.70mm×1.10mm (1210) Multi-Color Intelligent Control LED

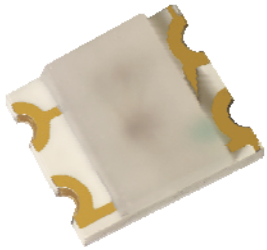

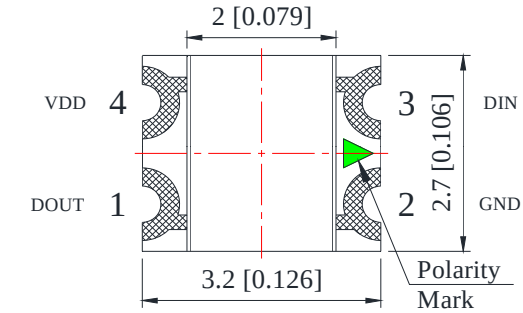

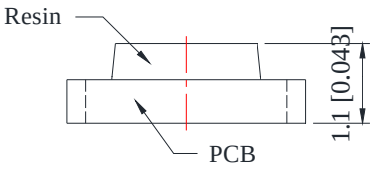

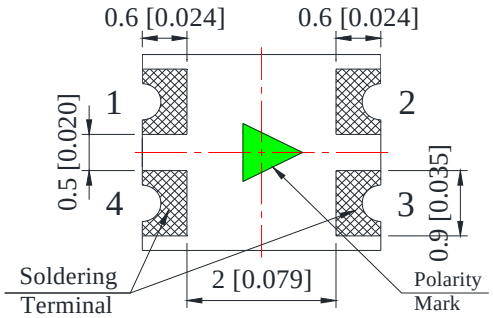

Pin Function

1 DOUT: Control Data Signal Output
2 GND: Ground
3 DIN: Control Data Signal Input
4 VDD: Power Supply LED

FS3227RGB4M-F1J	AlGaInP	Super Bright Red	632	624	White Diffused	+ 3.70 ~ + 5.50	12	80	120	120
	InGaN	Pure Green	520	525				250	500	
	InGaN	Blue	468	470				80	130	

4.00mm×2.00mm×1.75mm PLCC-4 Side View Multi-Color Intelligent Control LED

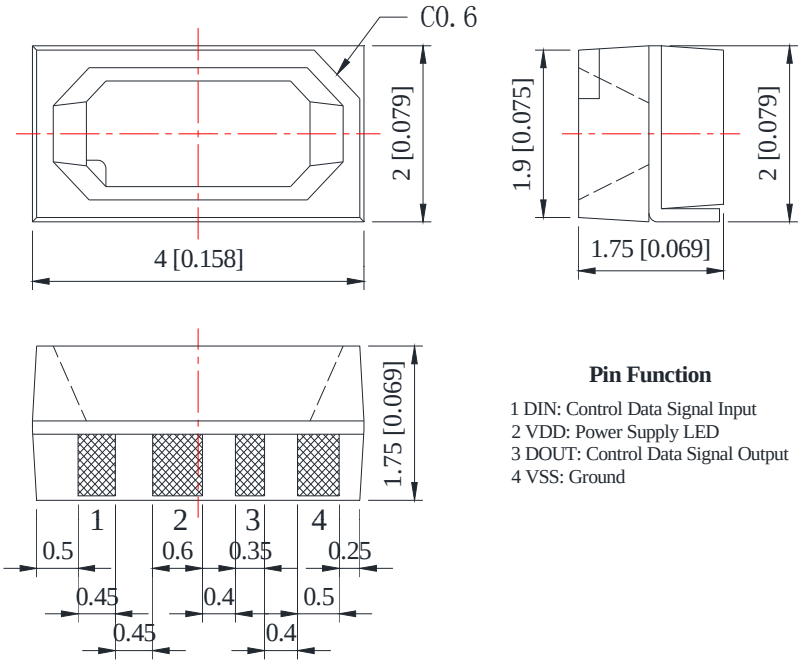

Pin Function

1 DIN: Control Data Signal Input
2 VDD: Power Supply LED
3 DOUT: Control Data Signal Output
4 VSS: Ground

FV4020RGBC-F1J	AlGaInP	Super Bright Red	632	624	Water Clear	+ 3.50 ~ + 5.50	12	250	500	120
	InGaN	Pure Green	520	525				600	1000	
	InGaN	Blue	468	470				100	250	

Part Number	Chip Material	Emitting Color	λp (nm) / x	λd (nm) / y	Lens Color	VF (V)		IV (mcd) / ΦV (lm)			Viewing Angle
						Typ.	Max.	IF=mA	Min.	Typ.	2θ ½

4.80mm×1.80mm×1.60mm PLCC-6 Side View Multi-Color Intelligent Control LED

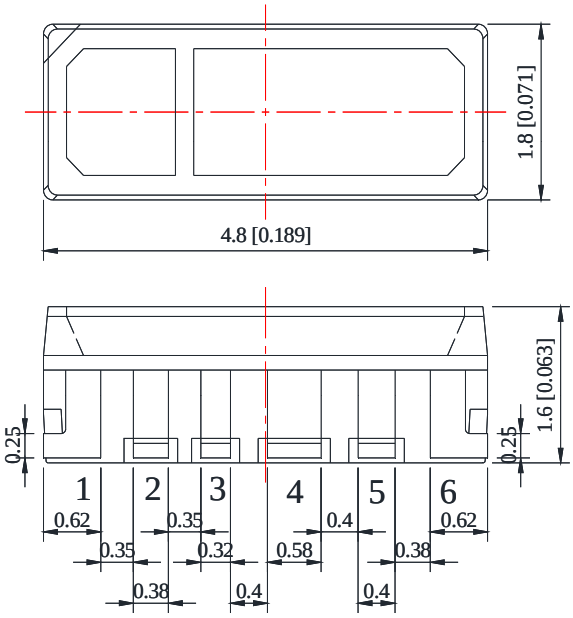

Pin Function

1 W-VDD: Power Supply White LED
2 NC: No Connect
3 DOUT: Control Data Signal Output
4 GND: Ground
5 VDD: Power Supply LED
6 DIN: Control Data Signal Input

FV4818RGBW2-F1S-6P	AlGaInP	Super Bright Red	632	624	Water Clear	+ 3.50 ~ + 5.50	12	150	350	120
	InGaN	Pure Green	520	525				600	1000	
	InGaN	Blue	468	470				100	250	
	InGaN	Cool White	x=0.31	y=0.32	Yellow Diffused			1000	2500	

4.80mm×1.60mm×1.60mm PLCC-6 Side View Multi-Color LED

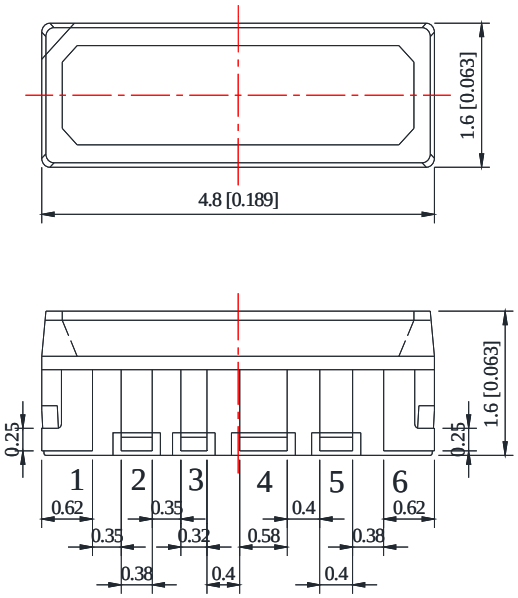

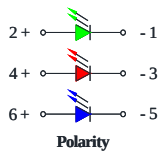

1 Cathode Green
2 Anode Green
3 Cathode Red
4 Anode Red
5 Cathode Blue
6 Anode Blue

V4816RGBC-001	AlGaInP	Super Bright Red	632	624	Water Clear	2.00	2.40	20	600	800	120
	InGaN	Pure Green	520	525		3.10	3.40		1500	2000	
	InGaN	Blue	468	470		3.10	3.40		400	600	

1. All dimensions are in millimeters (inches).
2. Tolerance is ±0.10mm (.004") unless otherwise noted.
3. Specifications are subject to change without notice.

Part Number	Chip Material	Emitting Color	λp (nm) / x	λd (nm) / y	Lens Color	VF (V)		IV (mcd)			Viewing Angle
						Typ.	Max.	IF=mA	Min.	Typ.	2θ ½

2×3mm Rectangular Flangeless White LED Lamps

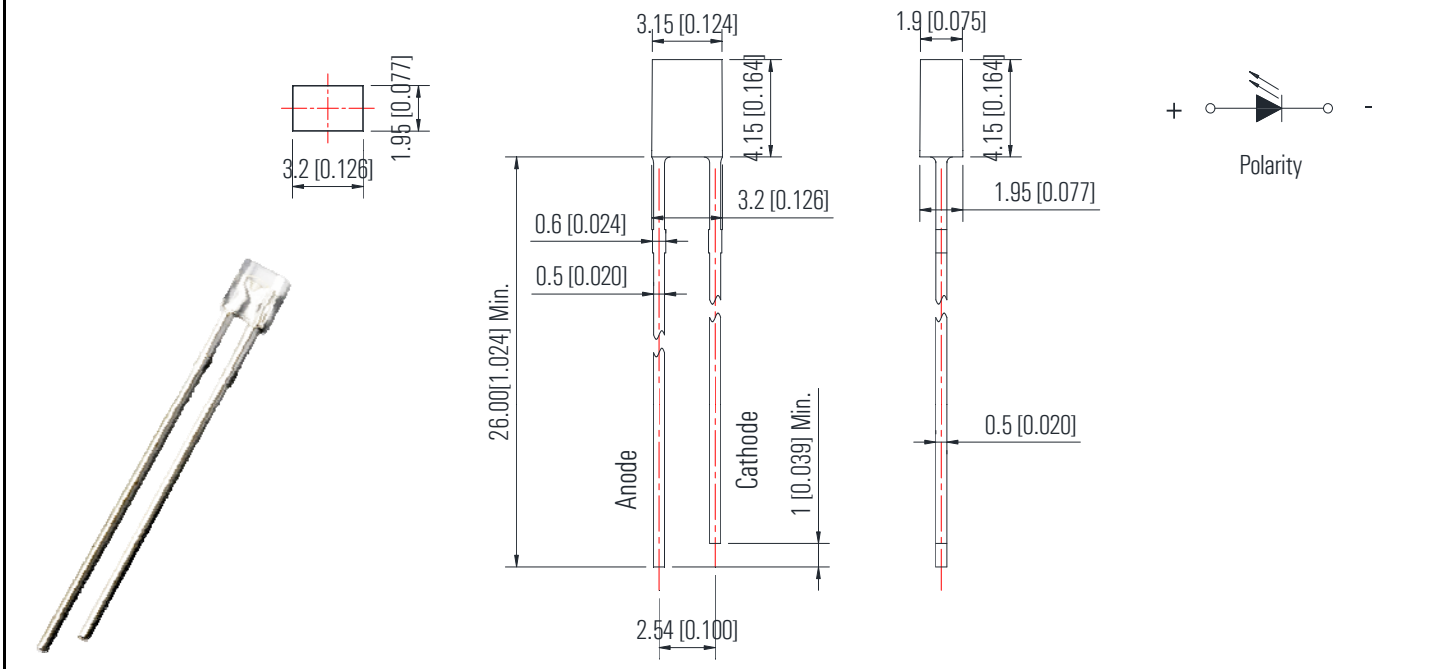

234WC2Q-W2-3P	InGaN	Cool White	x=0.28	y=0.28	Water Clear	3.00	3.40	20	780	1300	130
234WC2Q-W5-3P	InGaN	Neutral White	x=0.33	y=0.32		3.00	3.40		780	1300	
234WC2Q-W6-3P	InGaN	Warm White	x=0.43	y=0.40		3.00	3.40		780	1300	

3mm Cylindrical With Flange White LED Lamps

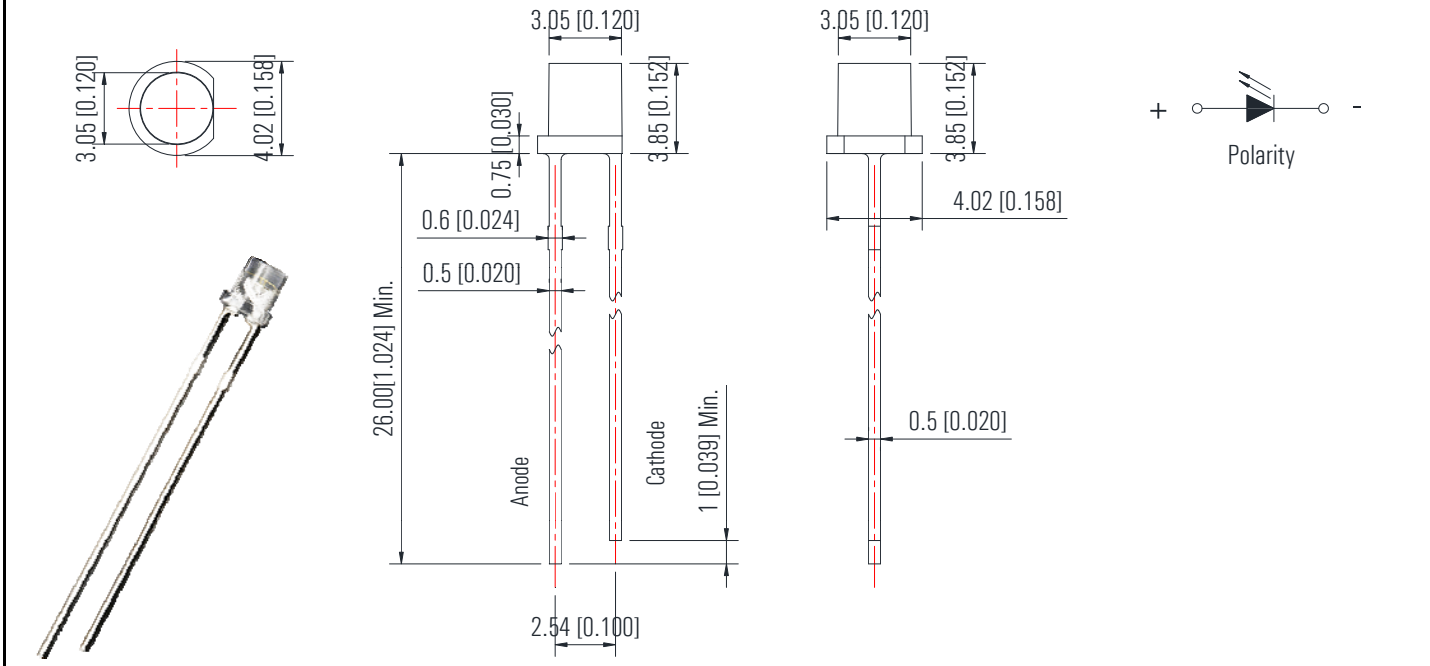

304WC1X-W2-3P	InGaN	Cool White	x=0.28	y=0.28	Water Clear	3.00	3.40	20	780	1300	100
304WC1X-W5-3P	InGaN	Neutral White	x=0.33	y=0.32		3.00	3.40		780	1300	
304WC1X-W6-3P	InGaN	Warm White	x=0.43	y=0.40		3.00	3.40		780	1300	

Part Number	Chip Material	Emitting Color	λp (nm) / x	λd (nm) / y	Lens Color	VF (V)		IV (mcd)			Viewing Angle
						Typ.	Max.	IF=mA	Min.	Typ.	2θ ½

3mm Round Without Flange White LED Lamps

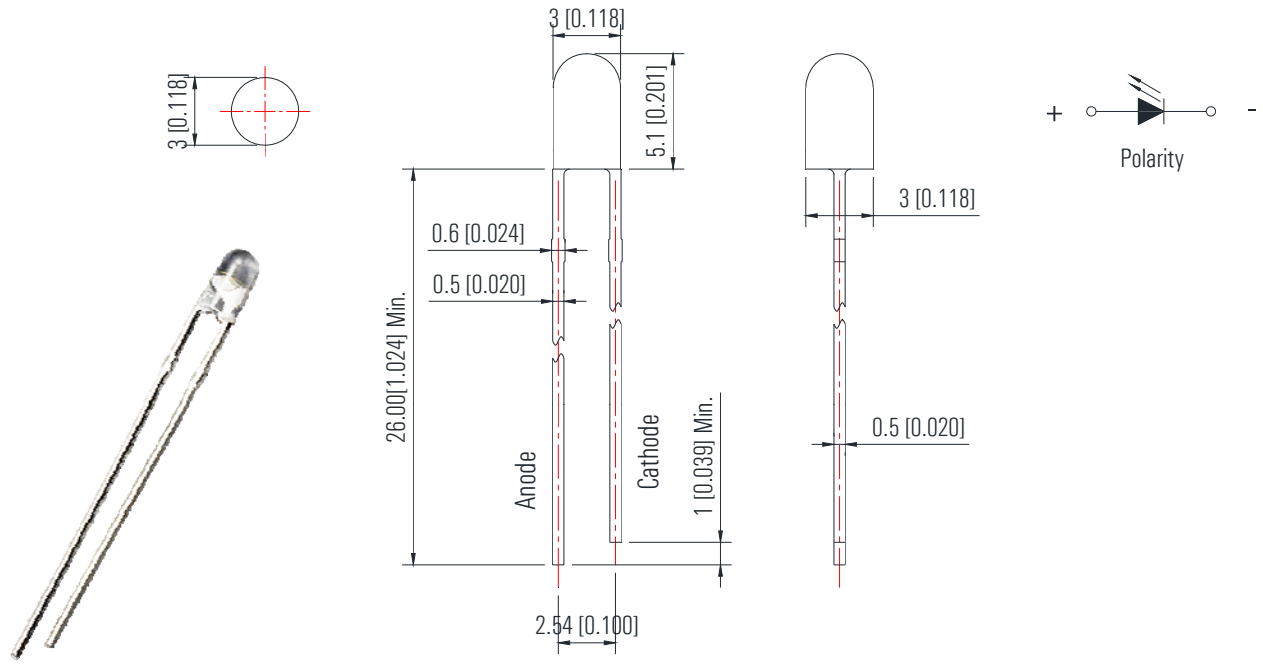

304WC2J-W2-3PD	InGaN	Cool White	x=0.28	y=0.28	Water Clear	3.00	3.40	20	5000	8500	30
304WC2J-W5-3PD	InGaN	Neutral White	x=0.33	y=0.32		3.00	3.40		5000	8500	
304WC2J-W6-3PD	InGaN	Warm White	x=0.43	y=0.40		3.00	3.40		5000	8500	

3mm Round Standard White LED Lamps

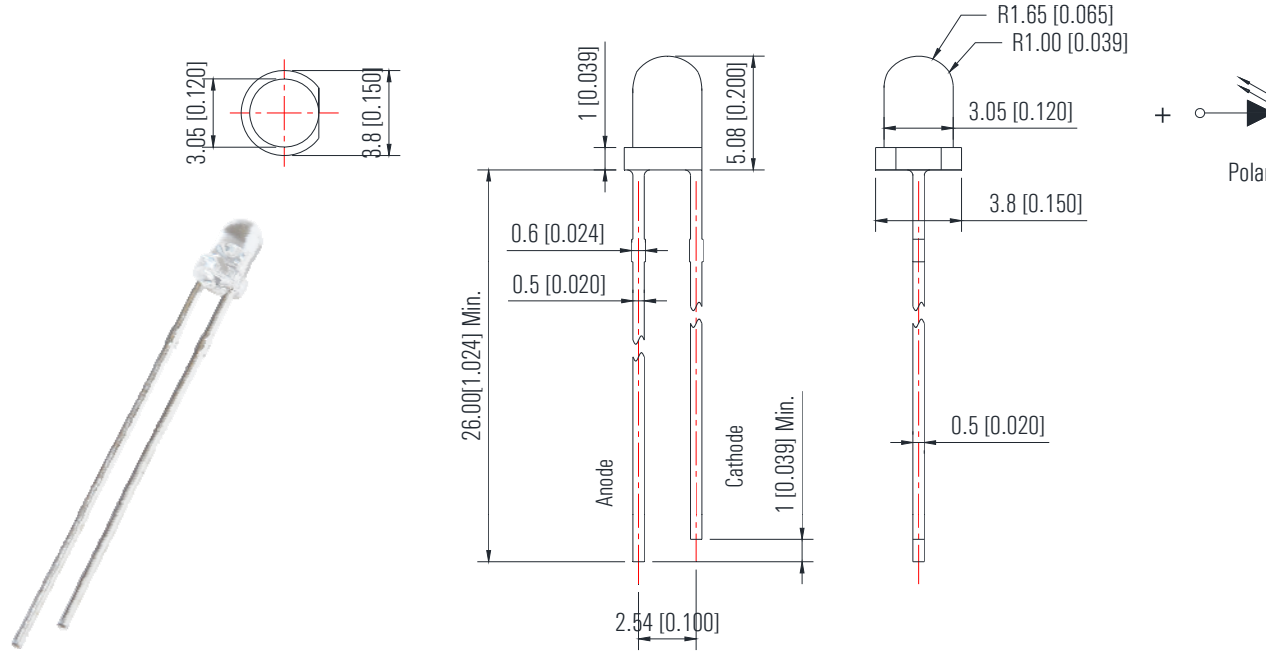

304WC4B-W2-3PD	InGaN	Cool White	x=0.28	y=0.28	Water Clear	3.00	3.40	20	5000	8500	30
304WC4B-W5-3PD	InGaN	Neutral White	x=0.33	y=0.32		3.00	3.40		5000	8500	
304WC4B-W6-3PD	InGaN	Warm White	x=0.43	y=0.40		3.00	3.40		5000	8500	

Part Number	Chip Material	Emitting Color	λp (nm) / x	λd (nm) / y	Lens Color	VF (V)		IV (mcd)			Viewing Angle
						Typ.	Max.	IF=mA	Min.	Typ.	2θ ½

4.8mm Round Wide Viewing Angle White LED Lamps

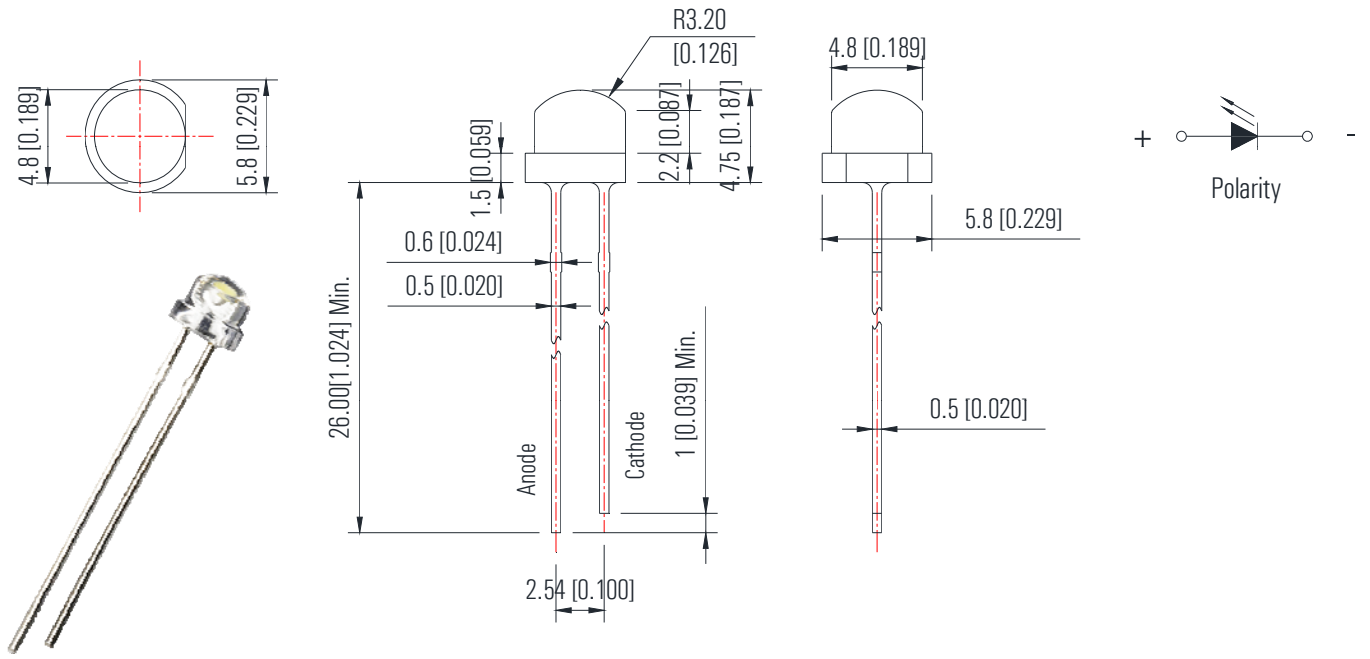

484WC1C-W2-3P	InGaN	Cool White	x=0.28	y=0.28	Water Clear	3.00	3.40	20	1300	2200	100
484WC1C-W5-3P	InGaN	Neutral White	x=0.33	y=0.32		3.00	3.40		1300	2200	
484WC1C-W6-3P	InGaN	Warm White	x=0.43	y=0.40		3.00	3.40		1300	2200	

4.8mm Round Wide Viewing Angle White LED Lamps

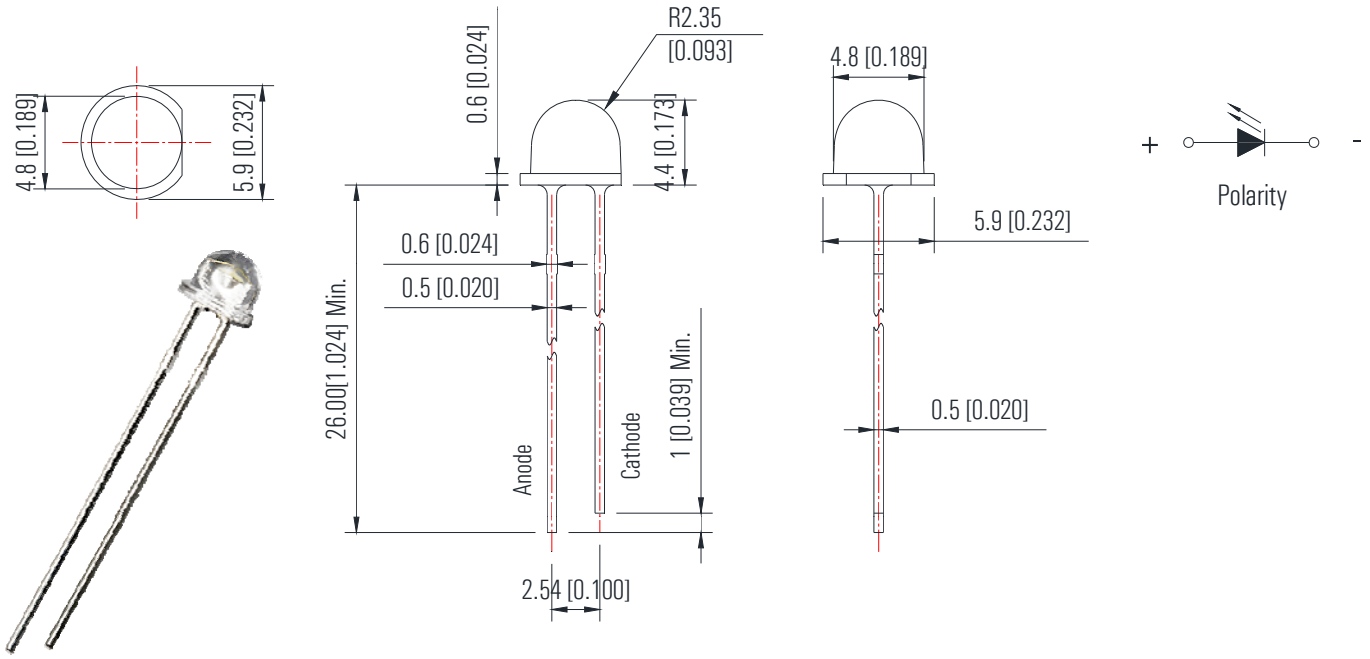

484WC1F-W2-3P	InGaN	Cool White	x=0.28	y=0.28	Water Clear	3.00	3.40	20	1300	2200	90
484WC1F-W5-3P	InGaN	Neutral White	x=0.33	y=0.32		3.00	3.40		1300	2200	
484WC1F-W6-3P	InGaN	Warm White	x=0.43	y=0.40		3.00	3.40		1300	2200	

Part Number	Chip Material	Emitting Color	λp (nm) / x	λd (nm) / y	Lens Color	VF (V)		IV (mcd)			Viewing Angle
						Typ.	Max.	IF=mA	Min.	Typ.	2θ ½

5mm Cylindrical With Flange White LED Lamps

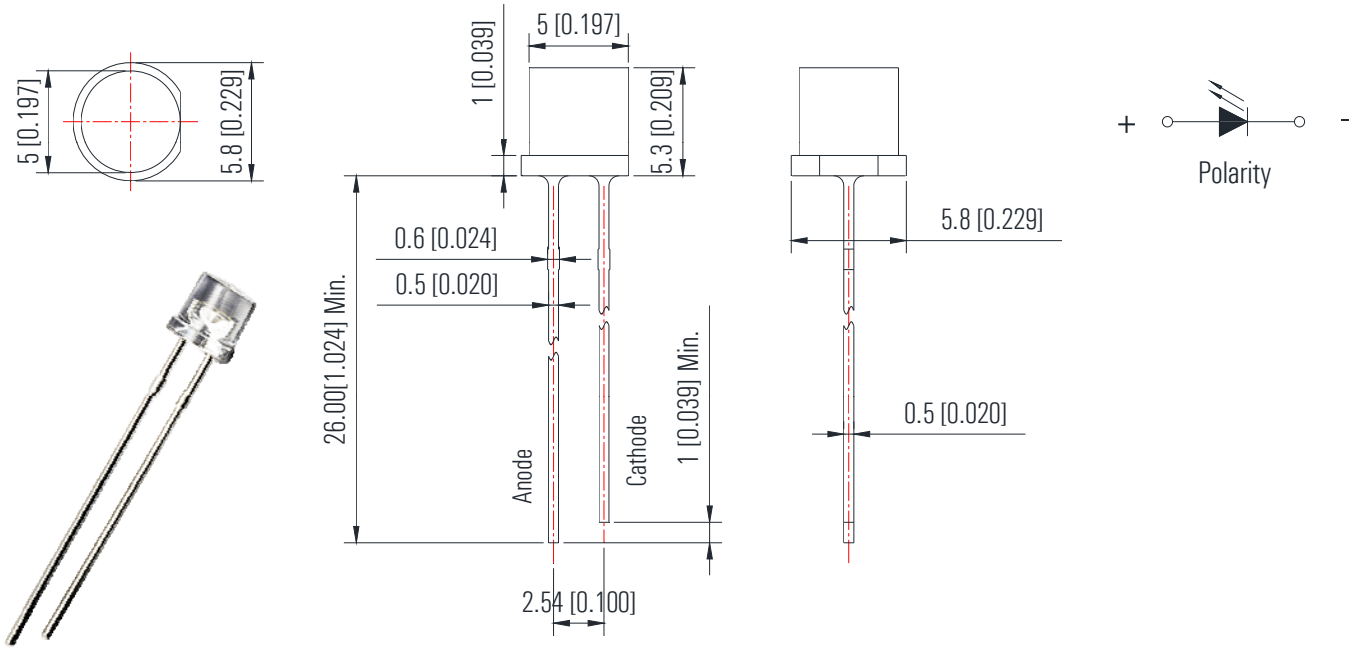

504WC1E-W2-3P	InGaN	Cool White	x=0.28	y=0.28	Water Clear	3.00	3.40	20	1000	1700	100
504WC1E-W5-3P	InGaN	Neutral White	x=0.33	y=0.32		3.00	3.40		1000	1700	
504WC1E-W6-3P	InGaN	Warm White	x=0.43	y=0.40		3.00	3.40		1000	1700	

5mm Round Standard White LED Lamps

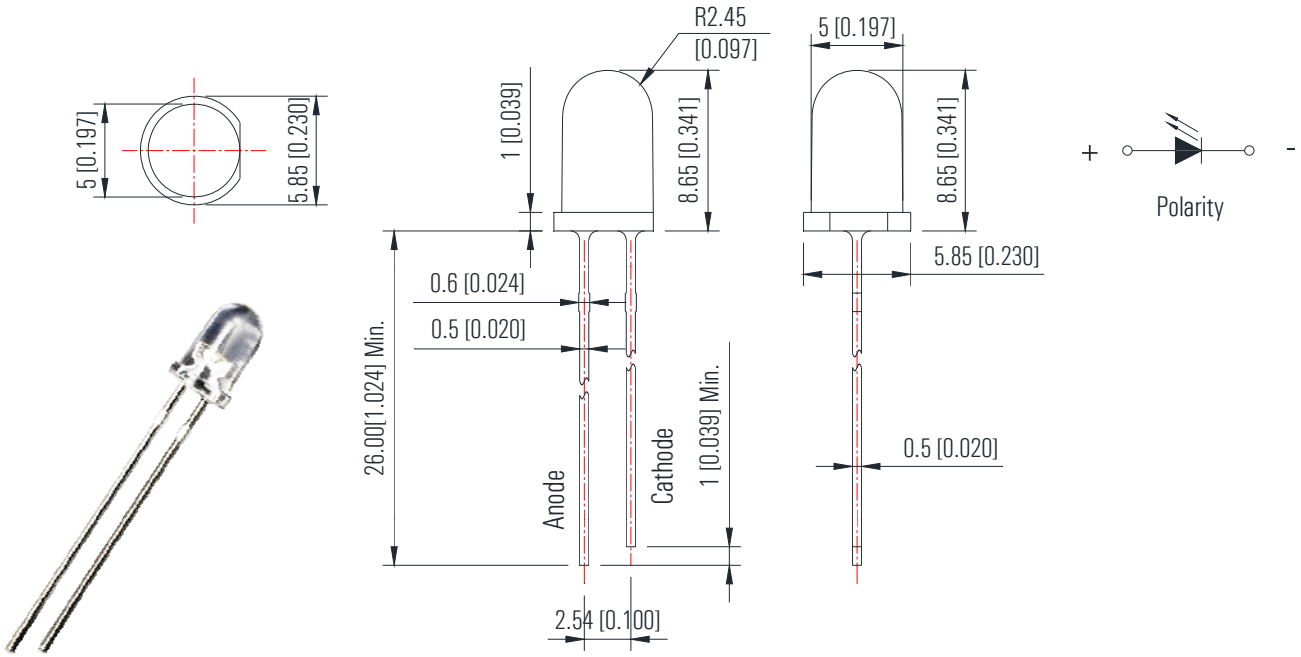

504WC2E-W2-3PC	InGaN	Cool White	x=0.28	y=0.28	Water Clear	3.00	3.40	20	14000	23000	15
504WC2E-W5-3PC	InGaN	Neutral White	x=0.33	y=0.32		3.00	3.40		14000	23000	
504WC2E-W6-3PC	InGaN	Warm White	x=0.43	y=0.40		3.00	3.40		14000	23000	

Part Number	Chip Material	Emitting Color	λp (nm) / x	λd (nm) / y	Lens Color	VF (V)		IV (mcd)			Viewing Angle
						Typ.	Max.	IF=mA	Min.	Typ.	2θ ½

5mm Round Standard White LED Lamps

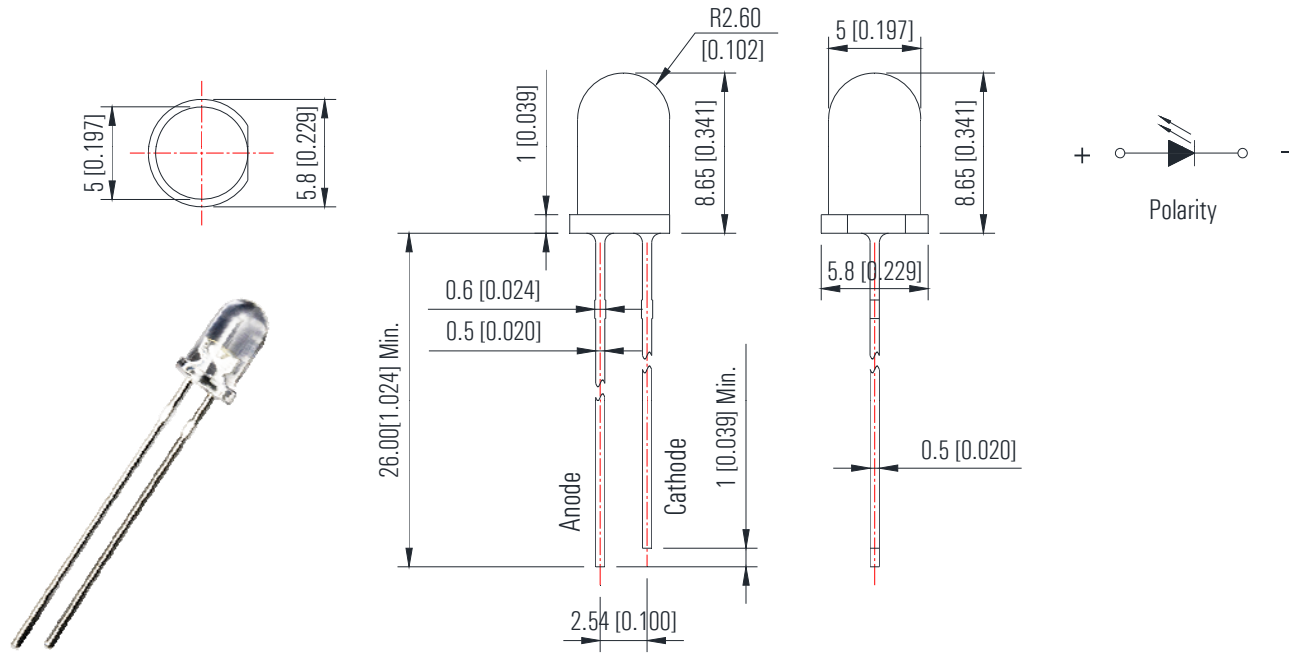

504WC2V-W2-3PD	InGaN	Cool White	x=0.28	y=0.28	Water Clear	3.00	3.40	20	5000	8500	30
504WC2V-W5-3PD	InGaN	Neutral White	x=0.33	y=0.32		3.00	3.40		5000	8500	
504WC2V-W6-3PD	InGaN	Warm White	x=0.43	y=0.40		3.00	3.40		5000	8500	

5mm Round Standard White LED Lamps

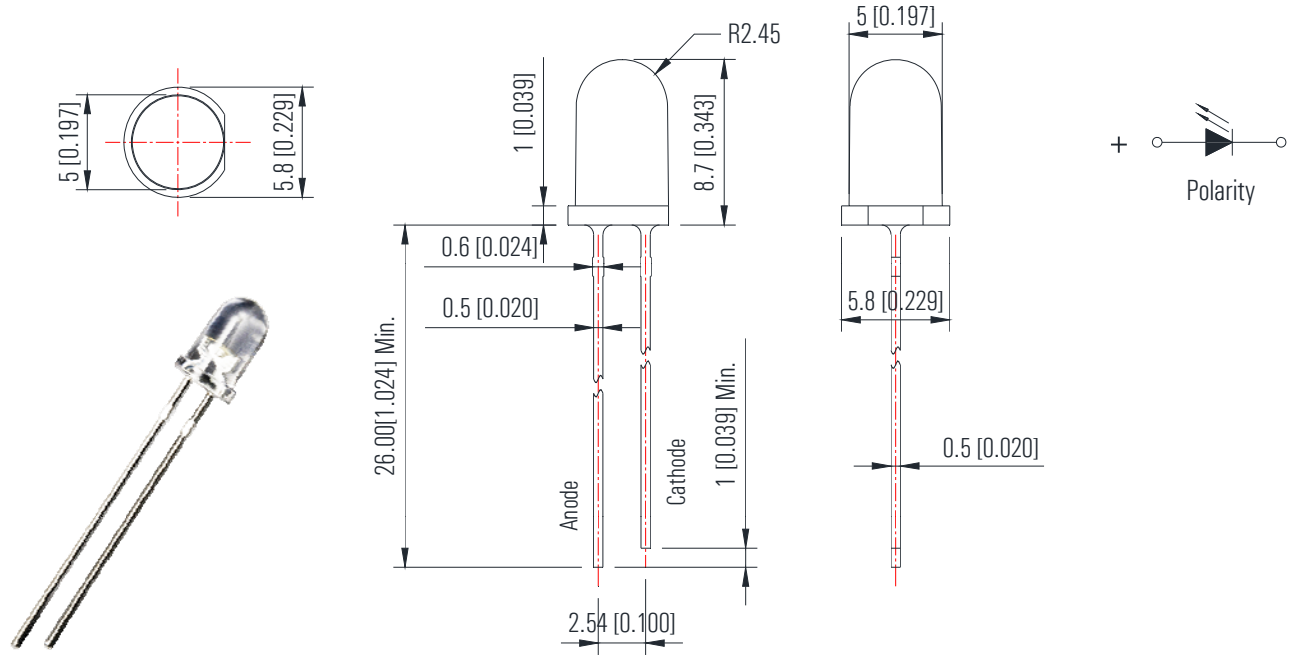

504WC2Z-W2-3PF	InGaN	Cool White	x=0.28	y=0.28	Water Clear	3.00	3.40	20	2900	5000	60
504WC2Z-W5-3PF	InGaN	Neutral White	x=0.33	y=0.32		3.00	3.40		2900	5000	
504WC2Z-W6-3PF	InGaN	Warm White	x=0.43	y=0.40		3.00	3.40		2900	5000	

Part Number	Chip Material	Emitting Color	λp (nm) / x	λd (nm) / y	Lens Color	VF (V)		IV (mcd)			Viewing Angle
						Typ.	Max.	IF=mA	Min.	Typ.	2θ ½

8mm Round With Flange White LED Lamps

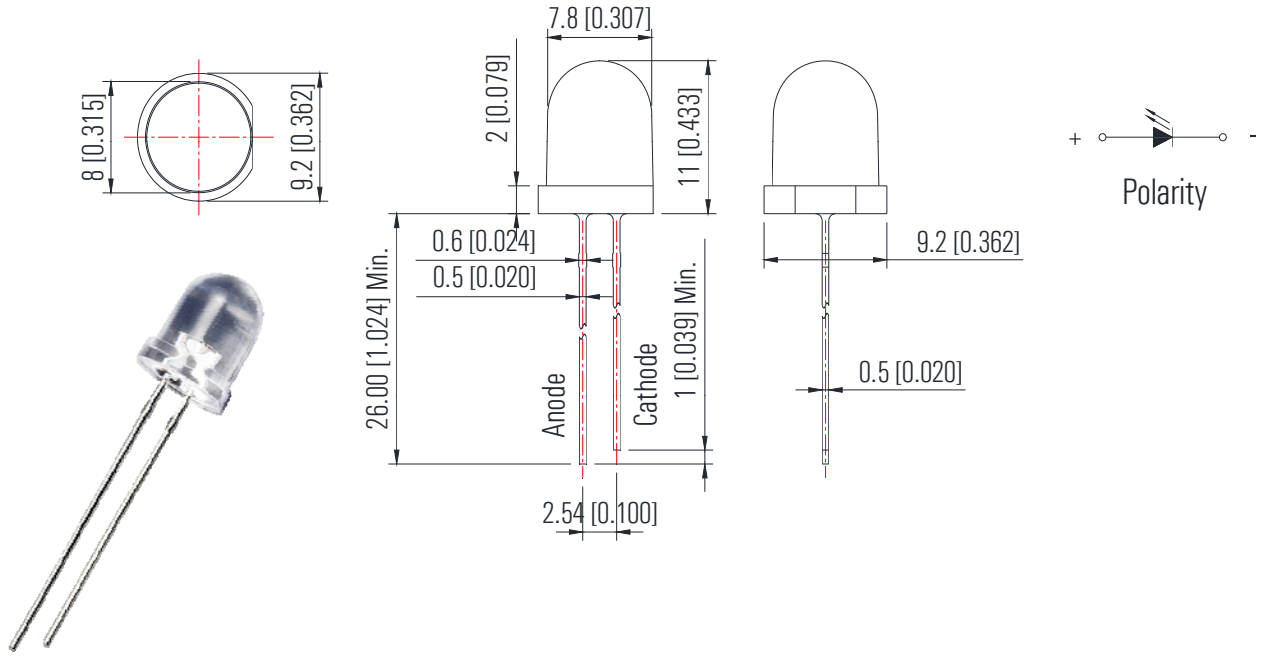

804WC2C-W2-3PD	InGaN	Cool White	x=0.28	y=0.28	Water Clear	3.00	3.40	20	5000	8500	30
804WC2C-W5-3PD	InGaN	Neutral White	x=0.33	y=0.32		3.00	3.40		5000	8500	
804WC2C-W6-3PD	InGaN	Warm White	x=0.43	y=0.40		3.00	3.40		5000	8500	

10mm Round With Flange White LED Lamps

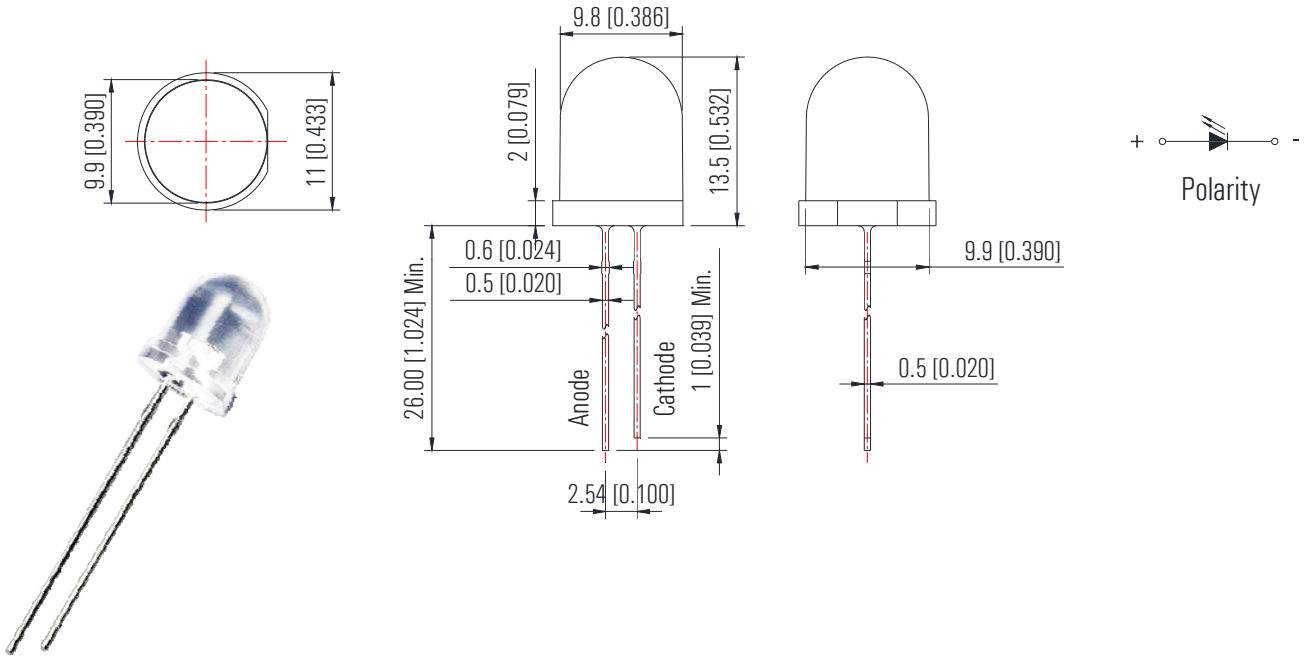

1004WC2R-W2-3PC	InGaN	Cool White	x=0.28	y=0.28	Water Clear	3.00	3.40	20	14000	23000	15
1004WC2R-W5-3PC	InGaN	Neutral White	x=0.33	y=0.32		3.00	3.40		14000	23000	
1004WC2R-W6-3PC	InGaN	Warm White	x=0.43	y=0.40		3.00	3.40		14000	23000	

Part Number	Chip Material	Emitting Color	λp (nm) / x	λd (nm) / y	Lens Color	VF (V)		IV (mcd)			Viewing Angle
						Typ.	Max.	IF=mA	Min.	Typ.	2θ ½

3.9×3.2mm Oval White LED Lamps

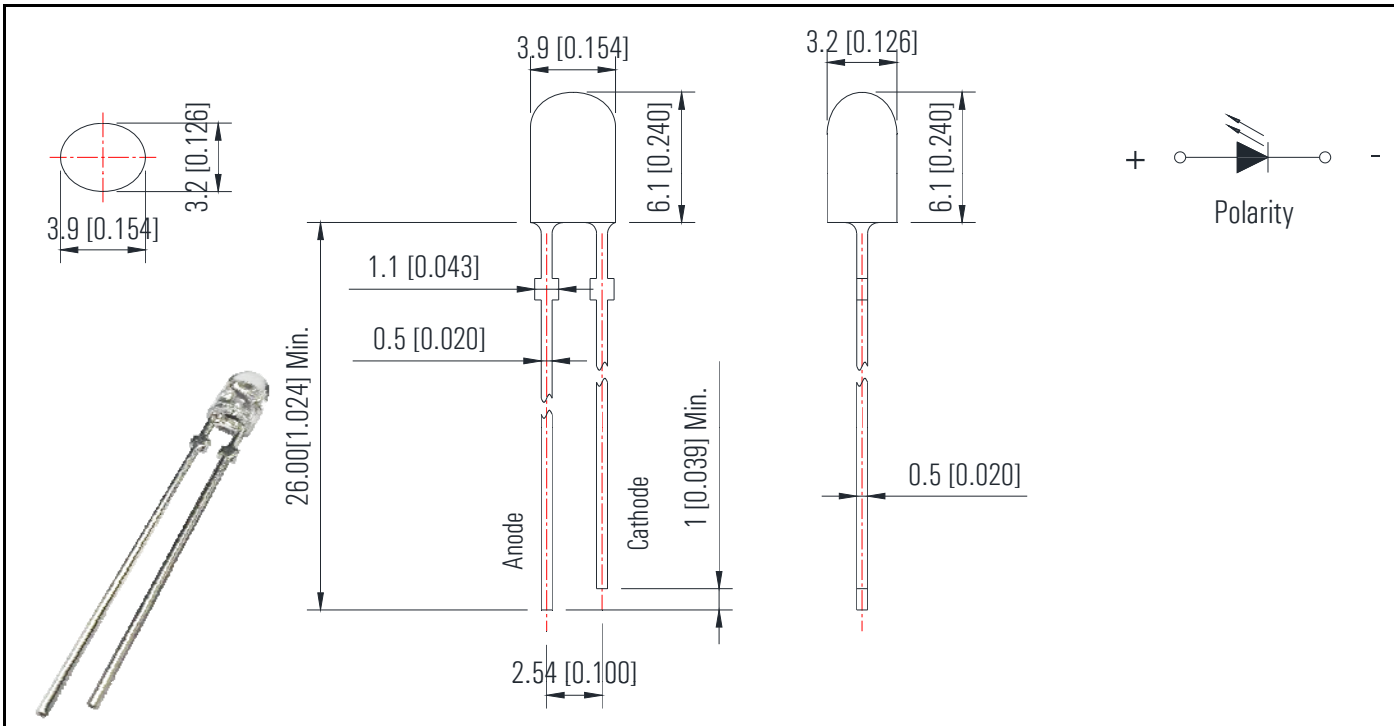

434WC2Q-W2-3P-T	InGaN	Cool White	x=0.28	y=0.28	Water Clear	3.00	3.40	20	2900	4500	110/40
434WM2Q-W2-3P-T	InGaN	Cool White	x=0.28	y=0.28	White Diffused	3.00	3.40		2200	3800	

5.2×3.8mm Oval White LED Lamps

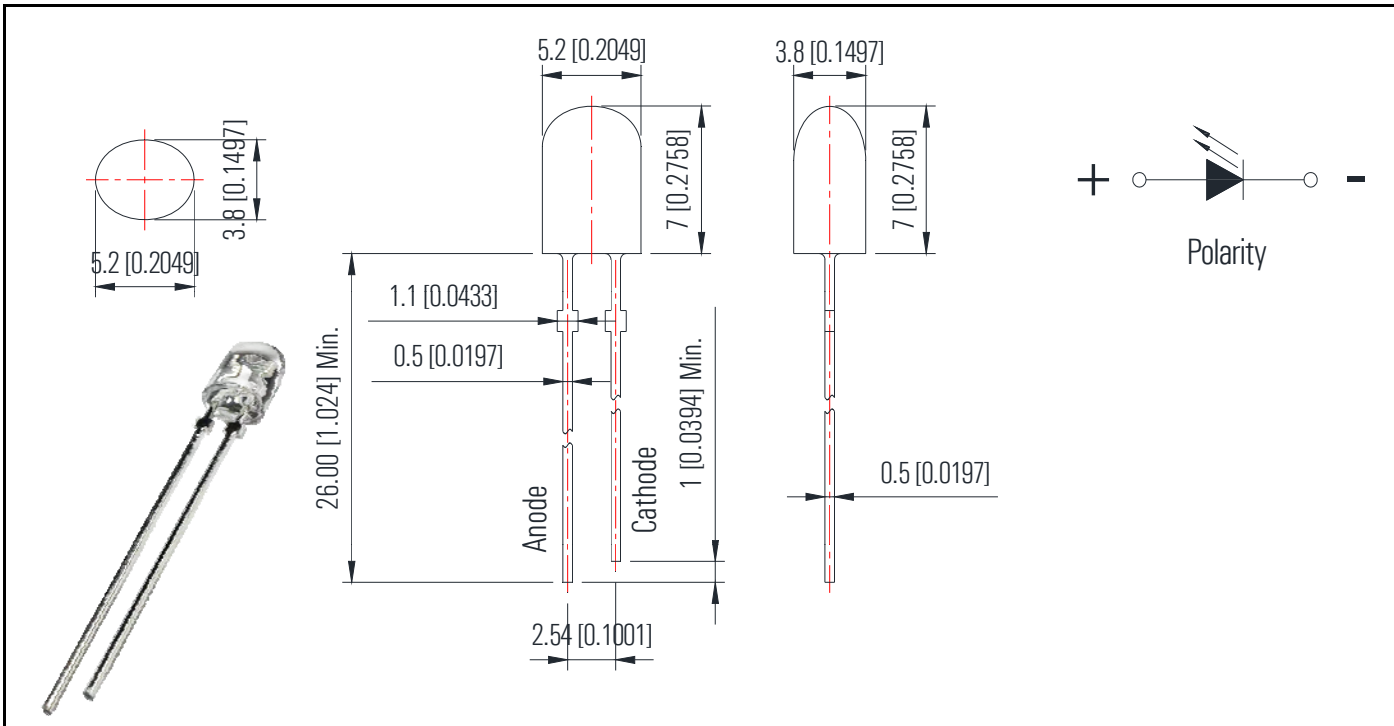

544WC2I-W2-3P-T	InGaN	Cool White	x=0.28	y=0.28	Water Clear	3.00	3.40	20	3800	6500	110/40
544WM2I-W2-3P-T	InGaN	Cool White	x=0.28	y=0.28	White Diffused	3.00	3.40		2200	3800	

Part Number	Chip Material	Emitting Color	λp (nm) / x	λd (nm) / y	Lens Color	VF (V)		IV (mcd)			Viewing Angle
						Typ.	Max.	IF=mA	Min.	Typ.	2θ ½

2mm Tower Type LED Lamps

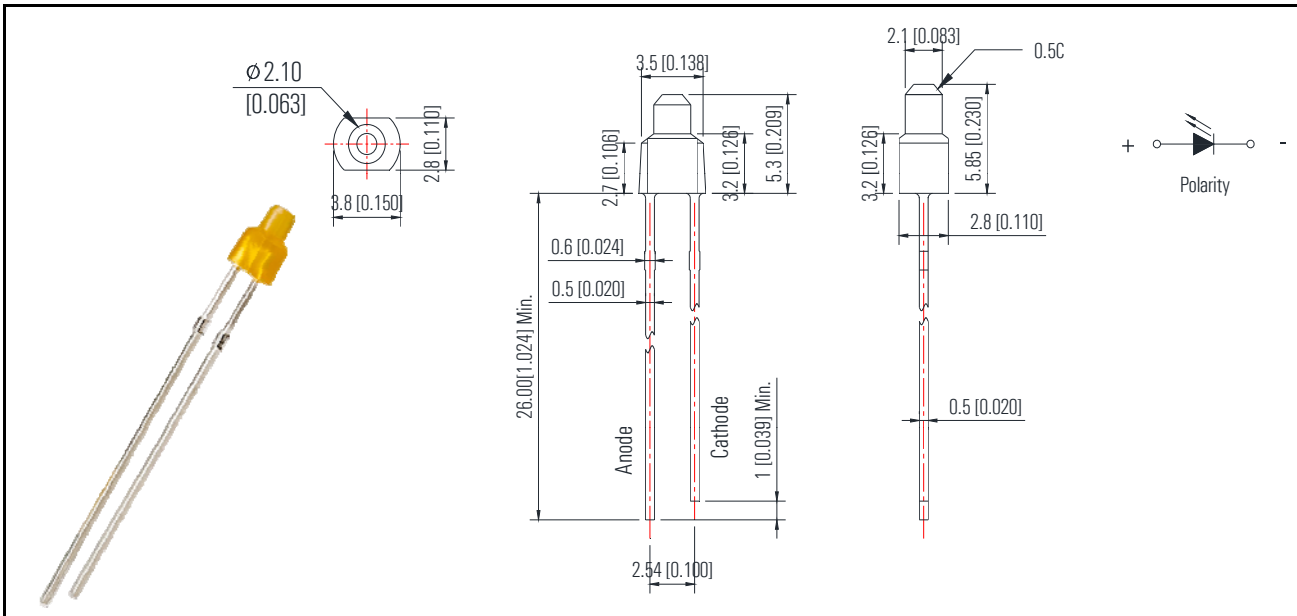

204VD2L-1B	AlGaInP	Super Bright Red	632	624	Red Diffused	2.00	2.40	20	70	120	150
204AD2L-1B	AlGaInP	Super Bright Orange	610	605	Orange Diffused	2.00	2.40		45	90	
204YD2L-1B	AlGaInP	Super Bright Yellow	592	590	Yellow Diffused	2.00	2.40		30	70	
204GD2L-1B	AlGaInP/GaAs	Super Yellow Green	573	571	Green Diffused	2.00	2.40		13	30	
204PGD2L-G5-2B	InGaN	Pure Green	520	525	Green Diffused	3.20	3.60		460	780	120
204BD2L-B4-2B	InGaN	Blue	468	470	Blue Diffused	3.20	3.60		120	210	

2mm Tower Type LED Lamps

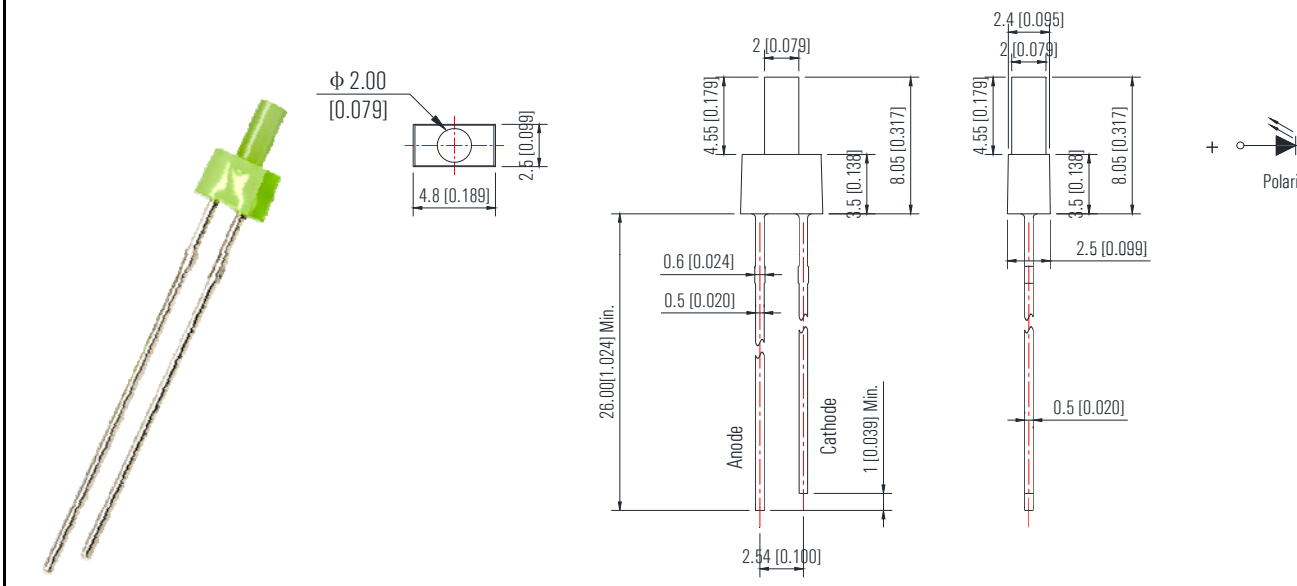

204VD1F-1B	AlGaInP	Super Bright Red	632	624	Red Diffused	2.00	2.40	20	30	70	130
204AD1F-1B	AlGaInP	Super Bright Orange	610	605	Orange Diffused	2.00	2.40		20	45	
204YD1F-1B	AlGaInP	Super Bright Yellow	592	590	Yellow Diffused	2.00	2.40		20	45	
204GD1F-1B	AlGaInP/GaAs	Super Yellow Green	573	571	Green Diffused	2.00	2.40		13	30	
204PGD1F-G5-2B	InGaN	Pure Green	520	525	Green Diffused	3.20	3.60		460	780	
204BD1F-B4-2B	InGaN	Blue	468	470	Blue Diffused	3.20	3.60		160	270	

Part Number	Chip Material	Emitting Color	λp (nm) / x	λd (nm) / y	Lens Color	VF (V)		IV (mcd)			Viewing Angle
						Typ.	Max.	IF=mA	Min.	Typ.	2θ ½

3mm Round Without Flange Type LED Lamps

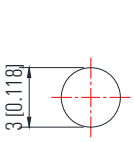

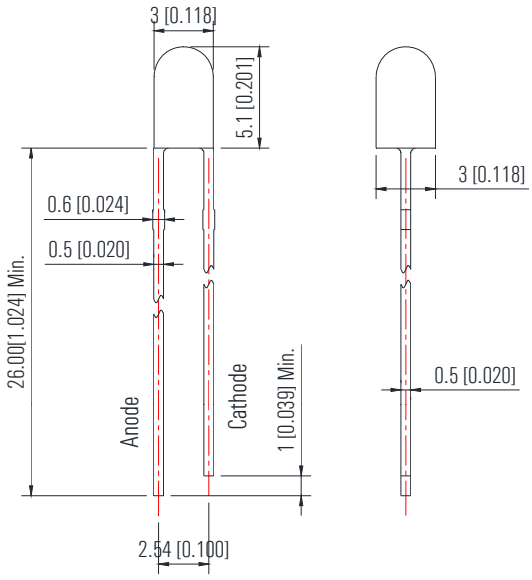

304VD2J-1B	AlGaInP	Super Bright Red	632	624	Red Diffused	2.00	2.40	20	350	600	60
304AD2J-1B	AlGaInP	Super Bright Orange	610	605	Orange Diffused	2.00	2.40		160	270	
304YD2J-1B	AlGaInP	Super Bright Yellow	592	590	Yellow Diffused	2.00	2.40		160	270	
304GD2J-1B	AlGaInP/GaAs	Super Yellow Green	573	571	Green Diffused	2.00	2.40		90	160	
304PGD2J-G5-2B	InGaN	Pure Green	520	525	Green Diffused	3.20	3.60		2200	3800	
304BD2J-B4-2B	InGaN	Blue	468	470	Blue Diffused	3.20	3.60		600	1000	

3mm Round Standard With Flange LED Lamps, T-1

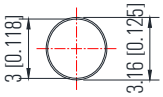

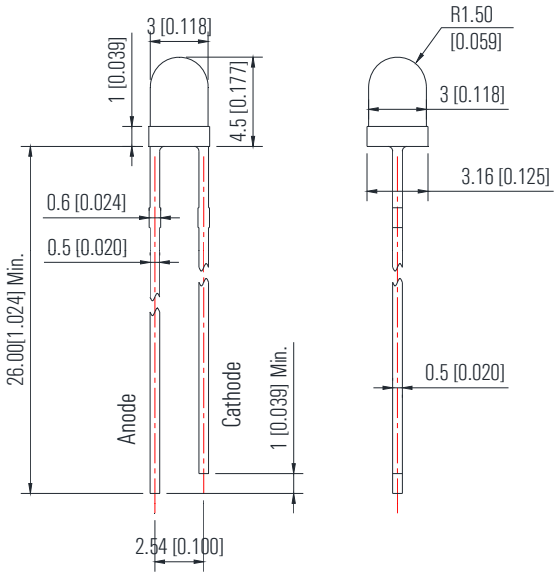

304VD2P-1B	AlGaInP	Super Bright Red	632	624	Red Diffused	2.00	2.40	20	160	270	80
304AD2P-1B	AlGaInP	Super Bright Orange	610	605	Orange Diffused	2.00	2.40		90	160	
304YD2P-1B	AlGaInP	Super Bright Yellow	592	590	Yellow Diffused	2.00	2.40		90	160	
304GD2P-1B	AlGaInP/GaAs	Super Yellow Green	573	571	Green Diffused	2.00	2.40		90	160	
304PGD2P-G5-2B	InGaN	Pure Green	520	525	Green Diffused	3.20	3.60		3800	6500	
304BD2P-B4-2B	InGaN	Blue	468	470	Blue Diffused	3.20	3.60		460	780	

Part Number	Chip Material	Emitting Color	λp (nm) / x	λd (nm) / y	Lens Color	VF (V)		IV (mcd)			Viewing Angle
						Typ.	Max.	IF=mA	Min.	Typ.	2θ ½

3mm Round Standard With Flange LED Lamps, T-1

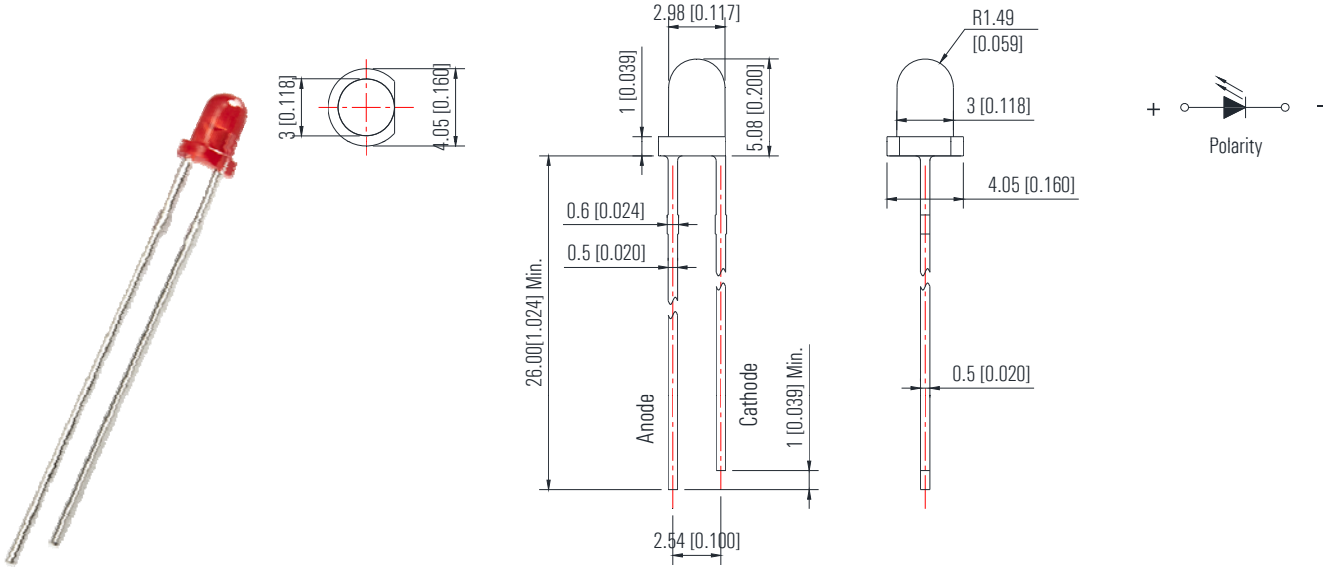

304VD2C-1B	AlGaInP	Super Bright Red	632	624	Red Diffused	2.00	2.40	20	270	460	60
304AD2C-1B	AlGaInP	Super Bright Orange	610	605	Orange Diffused	2.00	2.40		270	460	
304YD2C-1B	AlGaInP	Super Bright Yellow	592	590	Yellow Diffused	2.00	2.40		210	350	
304GD2C-1B	AlGaInP/GaAs	Super Yellow Green	573	571	Green Diffused	2.00	2.40		70	120	
304PGD2C-G5-2B	InGaN	Pure Green	520	525	Green Diffused	3.20	3.60		2900	5000	
304BD2C-B4-2B	InGaN	Blue	468	470	Blue Diffused	3.20	3.60		780	1300	

3mm Round Standard With Flange LED Lamps, T-1

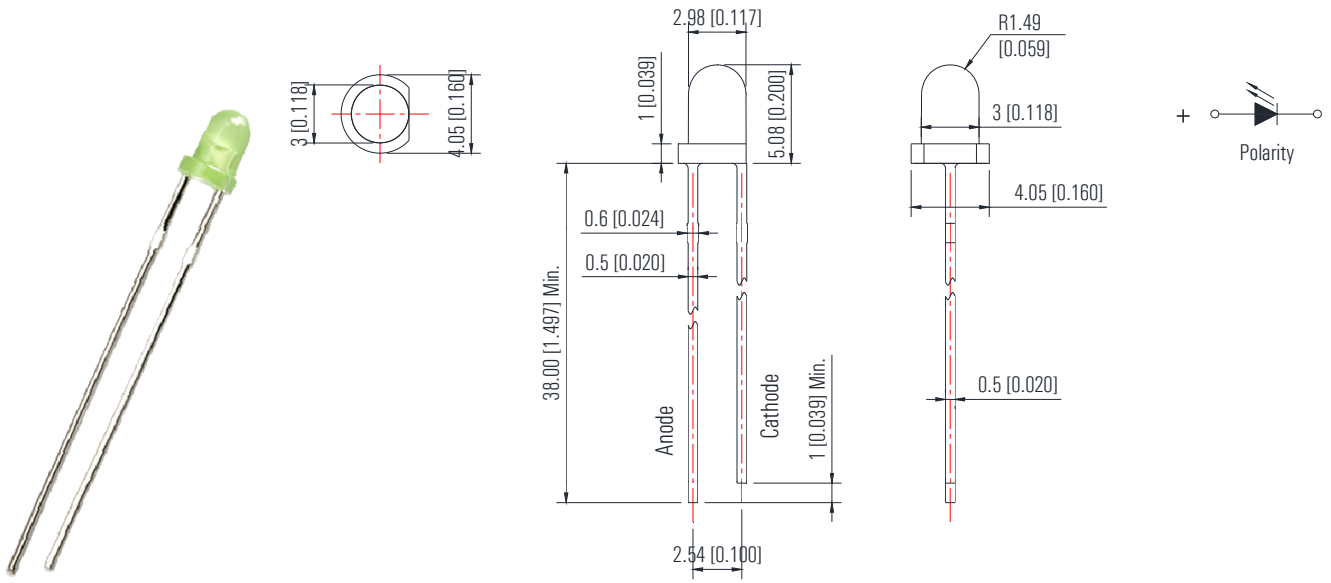

304VD2C-1B-L38	AlGaInP	Super Bright Red	632	624	Red Diffused	2.00	2.40	20	270	460	60
304AD2C-1B-L38	AlGaInP	Super Bright Orange	610	605	Orange Diffused	2.00	2.40		270	460	
304YD2C-1B-L38	AlGaInP	Super Bright Yellow	592	590	Yellow Diffused	2.00	2.40		210	350	
304GD2C-1B-L38	AlGaInP/GaAs	Super Yellow Green	573	571	Green Diffused	2.00	2.40		70	120	

Part Number	Chip Material	Emitting Color	λp (nm) / x	λd (nm) / y	Lens Color	VF (V)		IV (mcd)			Viewing Angle
						Typ.	Max.	IF=mA	Min.	Typ.	2θ ½

5mm Round Standard With Flange LED Lamps, T-1 3/4

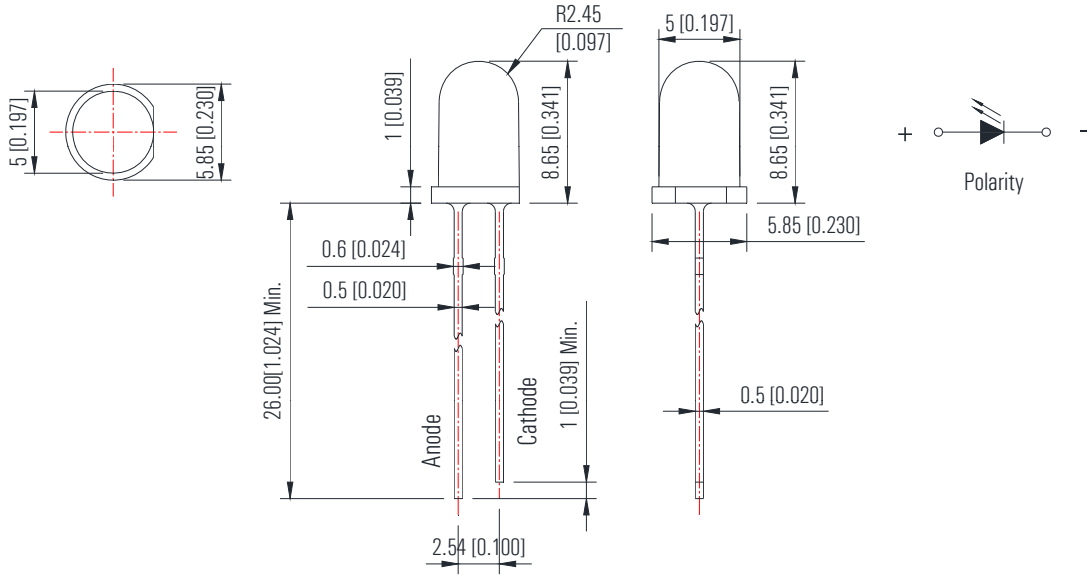

503VD2E-1B	AlGaInP	Super Bright Red	632	624	Red Diffused	2.00	2.40	20	210	350	60
503AD2E-1B	AlGaInP	Super Bright Orange	610	605	Orange Diffused	2.00	2.40		70	120	
503YD2E-1B	AlGaInP	Super Bright Yellow	592	590	Yellow Diffused	2.00	2.40		120	210	
503GD2E-1B	AlGaInP/GaAs	Super Yellow Green	573	571	Green Diffused	2.00	2.40		30	70	
504PGD2E-G5-2B	InGaN	Pure Green	520	525	Green Diffused	3.20	3.60		1300	2900	
504BD2E-B4-2B	InGaN	Blue	468	470	Blue Diffused	3.20	3.60		350	600	

8mm Round Standard With Flange LED Lamps

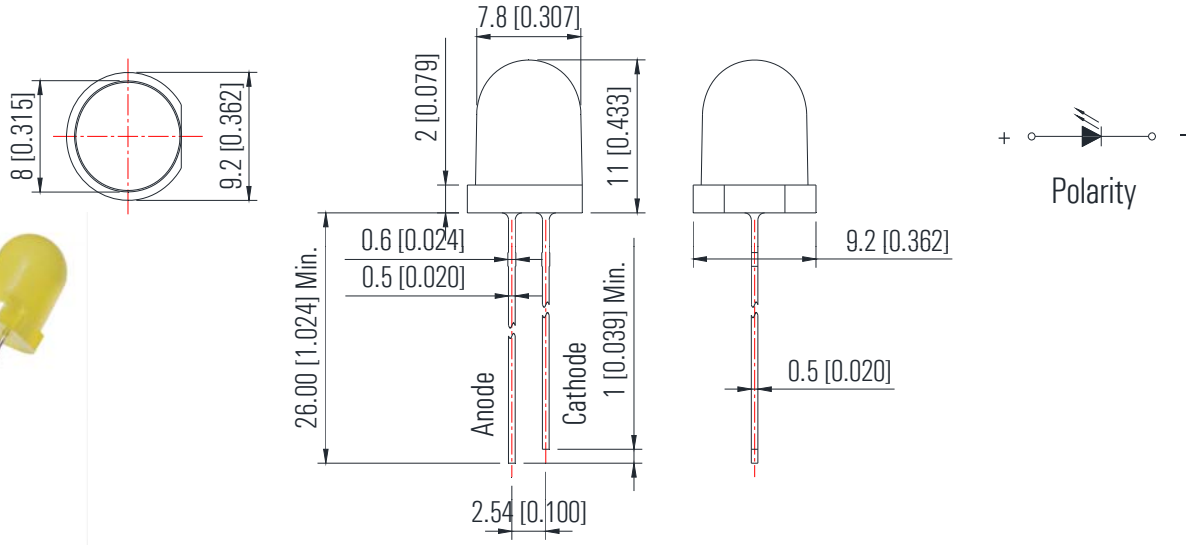

803VD2C-1B	AlGaInP	Super Bright Red	632	624	Red Diffused	2.00	2.40	20	160	270	60
803AD2C-1B	AlGaInP	Super Bright Orange	610	605	Orange Diffused	2.00	2.40		160	270	
803YD2C-1B	AlGaInP	Super Bright Yellow	592	590	Yellow Diffused	2.00	2.40		210	350	
803GD2C-1B	AlGaInP/GaAs	Super Yellow Green	573	571	Green Diffused	2.00	2.40		45	90	
804PGD2C-G5-2B	InGaN	Pure Green	520	525	Green Diffused	3.20	3.60		2900	5000	
804BD2C-B4-2B	InGaN	Blue	468	470	Blue Diffused	3.20	3.60		460	780	

Part Number	Chip Material	Emitting Color	λp (nm) / x	λd (nm) / y	Lens Color	VF (V)		IV (mcd)			Viewing Angle
						Typ.	Max.	IF=mA	Min.	Typ.	2θ ½

10mm Round Standard With Flange LED Lamps

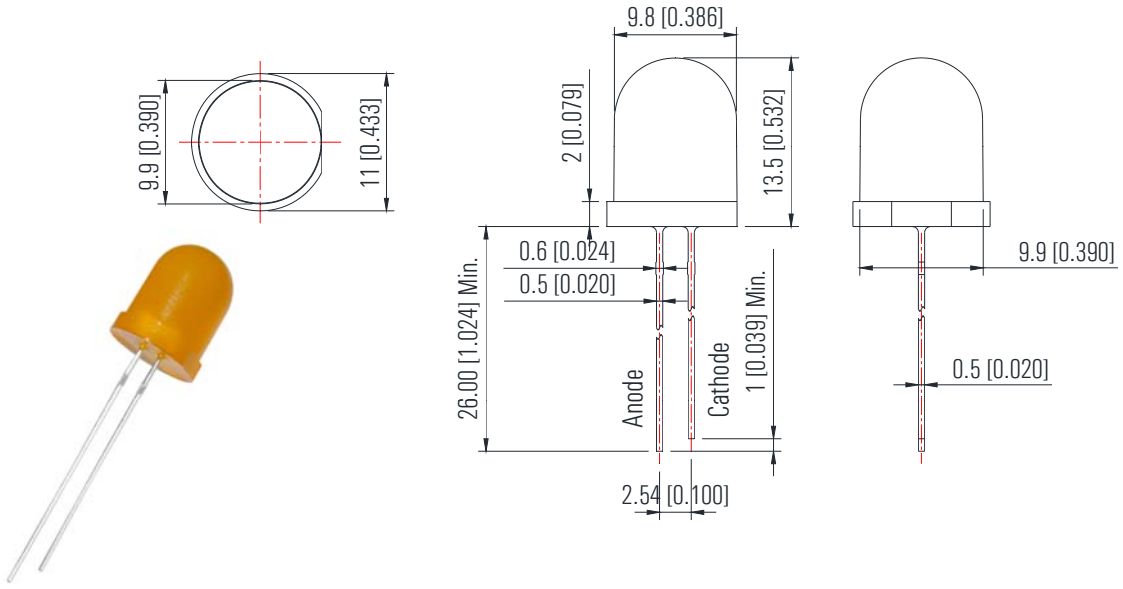

1003VD2R-1B	AlGaInP	Super Bright Red	632	624	Red Diffused	2.00	2.40	20	160	270	60
1003AD2R-1B	AlGaInP	Super Bright Orange	610	605	Orange Diffused	2.00	2.40		120	210	
1003YD2R-1B	AlGaInP	Super Bright Yellow	592	590	Yellow Diffused	2.00	2.40		120	210	
1003GD2R-1B	AlGaInP/GaAs	Super Yellow Green	573	571	Green Diffused	2.00	2.40		20	45	
1004PGD2R-G5-2B	InGaN	Pure Green	520	525	Green Diffused	3.20	3.60		1700	2900	
1004BD2R-B4-2B	InGaN	Blue	468	470	Blue Diffused	3.20	3.60		210	350	

3mm Round Without Flange Super Bright LED Lamps

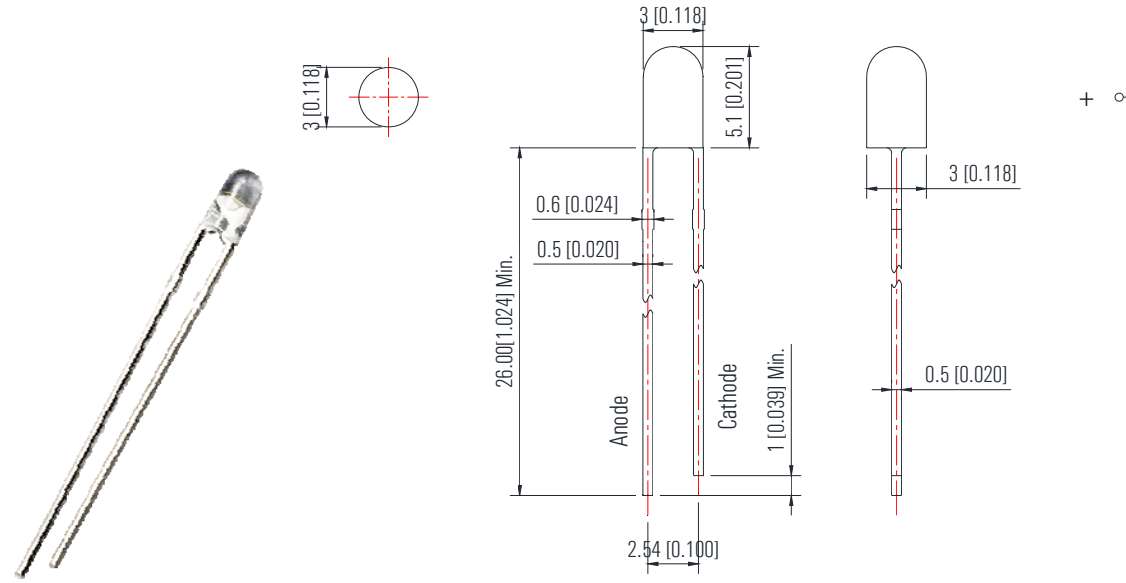

304VC2J-2BD	AlGaInP	Super Bright Red	632	624	Water Clear	2.00	2.40	20	600	1000	30
304AC2J-2BD	AlGaInP	Super Bright Orange	610	605		2.00	2.40		1000	1700	
304YC2J-2BD	AlGaInP	Super Bright Yellow	592	590		2.00	2.40		600	1000	
304PGC2J-G5-2BD	InGaN	Pure Green	520	525		3.20	3.60		11000	18000	25
304BC2J-B4-2BD	InGaN	Blue	468	470		3.20	3.60		2900	5000	

Part Number	Chip Material	Emitting Color	λp (nm) / x	λd (nm) / y	Lens Color	VF (V)		IV (mcd)			Viewing Angle
						Typ.	Max.	IF=mA	Min.	Typ.	2θ ½

3mm Round Standard With Flange Super Bright LED Lamps, T-1

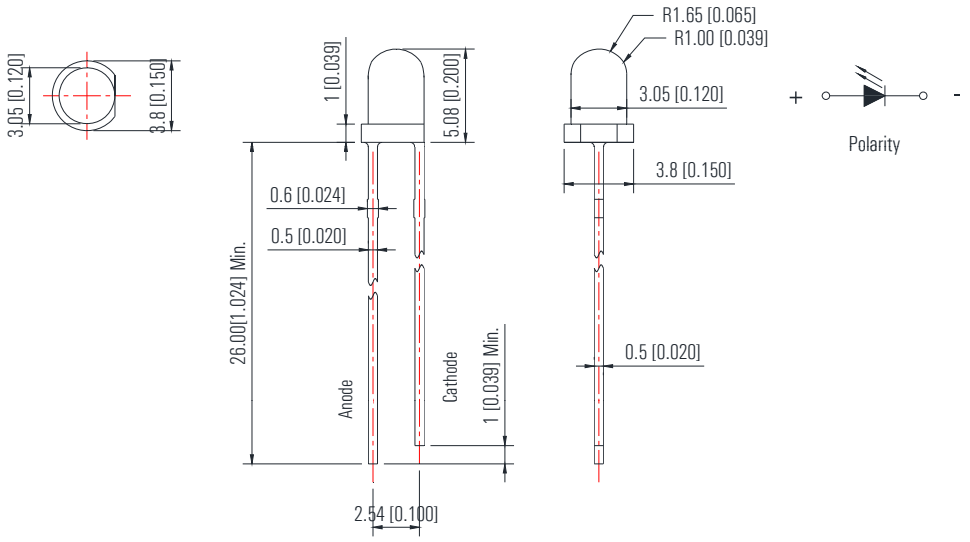

304VC4B-2BD	AlGaInP	Super Bright Red	632	624	Water Clear	2.00	2.40	20	600	1000	30
304AC4B-2BD	AlGaInP	Super Bright Orange	610	605		2.00	2.40		600	1000	
304YC4B-2BD	AlGaInP	Super Bright Yellow	592	590		2.00	2.40		600	1000	
304GC4B-1BD	AlGaInP/GaAs	Super Yellow Green	573	571		2.00	2.40		160	270	
304PGC4B-G5-2BD	InGaN	Pure Green	520	525		3.20	3.60		11000	18000	
304BC4B-B4-2BD	InGaN	Blue	468	470		3.20	3.60		2200	3800	
304UVAC4B-Q5D	InGaN	UV	395	/		3.20	4.00		45	90	25
304UVAC4B-Q6D	InGaN	UV	400	/		3.20	4.00		45	90	

4.80mm Round Wide Viewing Angle Type LED Lamps

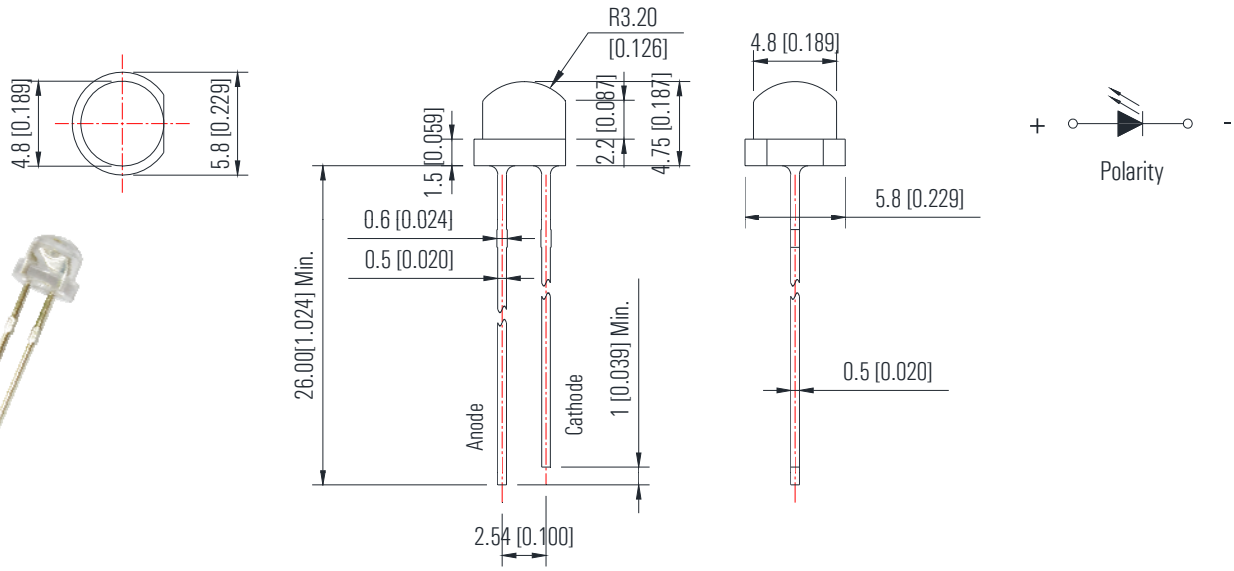

483VC1C-1B	AlGaInP	Super Bright Red	632	624	Water Clear	2.00	2.40	20	160	270	100
483AC1C-1B	AlGaInP	Super Bright Orange	610	605		2.00	2.40		160	270	
483YC1C-1B	AlGaInP	Super Bright Yellow	592	590		2.00	2.40		210	350	
484PGC1C-G5-2B	InGaN	Pure Green	520	525		3.20	3.60		2900	5000	80
484BC1C-B4-2B	InGaN	Blue	468	470		3.20	3.60		600	1000	

Part Number	Chip Material	Emitting Color	λp (nm) / x	λd (nm) / y	Lens Color	VF (V)		IV (mcd)			Viewing Angle
						Typ.	Max.	IF=mA	Min.	Typ.	2θ ½

4.80mm Round Wide Viewing Angle Type LED Lamps

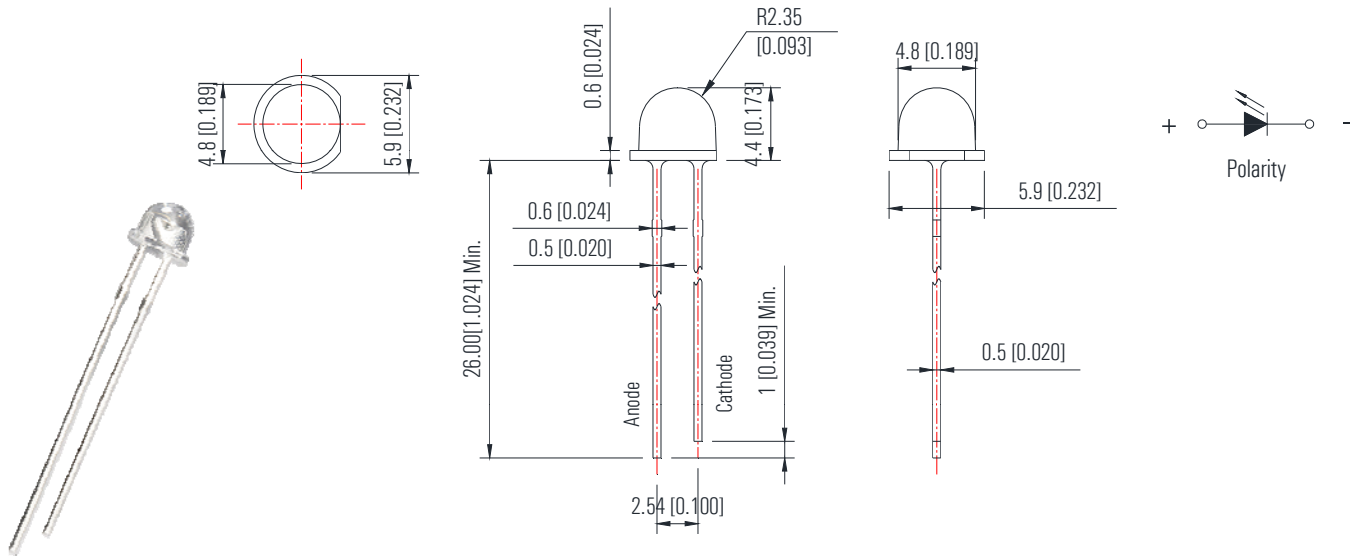

483VC1F-1B	AlGaInP	Super Bright Red	632	624	Water Clear	2.00	2.40	20	270	460	100
483AC1F-1B	AlGaInP	Super Bright Orange	610	605		2.00	2.40		270	460	
483YC1F-1B	AlGaInP	Super Bright Yellow	592	590		2.00	2.40		270	460	
484PGC1F-G5-2B	InGaN	Pure Green	520	525		3.20	3.60		3800	6500	60
484BC1F-B4-2B	InGaN	Blue	468	470		3.20	3.60		780	1300	

5mm Round Standard With Flange Super Bright LED Lamps, 15°, T-1 3/4

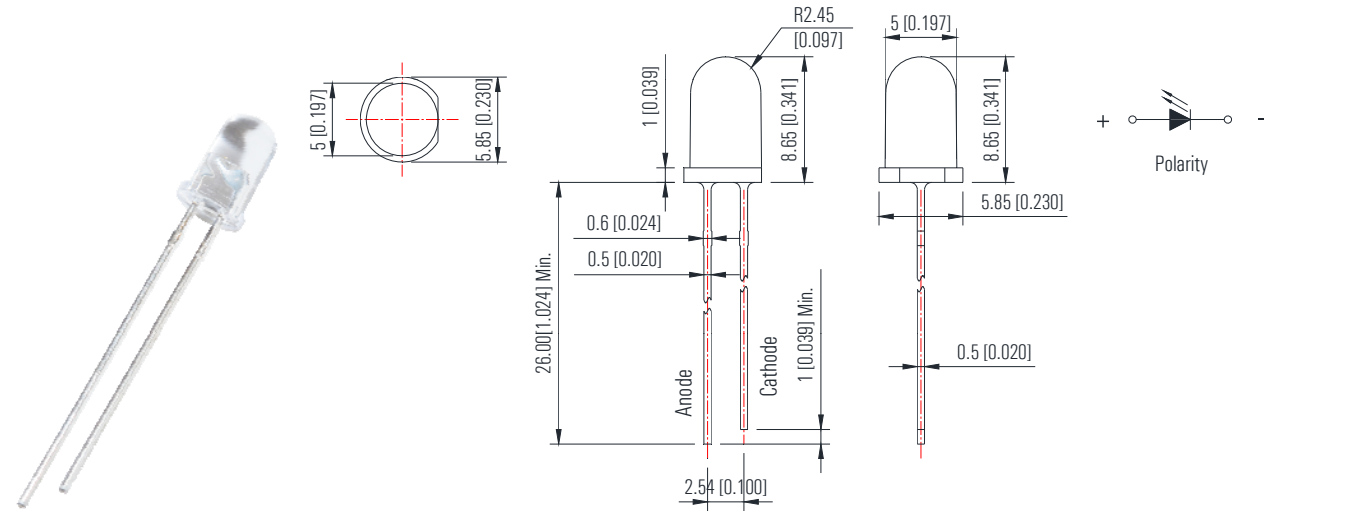

503VC2E-2BC	AlGaInP	Super Bright Red	632	624	Water Clear	2.00	2.40	20	2900	5000	15
503VC2E-4CC	AlGaInP	Super Bright Red	632	624		2.00	2.40		8500	14000	
503AC2E-2BC	AlGaInP	Super Bright Orange	610	605		2.00	2.40		1700	2900	
503AC2E-4CC	AlGaInP	Super Bright Orange	610	605		2.00	2.40		6500	11000	
503YC2E-2BC	AlGaInP	Super Bright Yellow	592	590		2.00	2.40		2900	5000	
503YC2E-4CC	AlGaInP	Super Bright Yellow	592	590		2.00	2.40		8500	14000	
504PGC2E-G5-2BC	InGaN	Pure Green	520	525		3.20	3.60		23000	39000	
504BC2E-B4-2BC	InGaN	Blue	468	470		3.20	3.60		6500	11000	
504UVAC2E-Q5C	InGaN	UV	395	/		3.20	4.00		270	350	
504UVAC2E-Q6C	InGaN	UV	400	/		3.20	4.00		270	350	

Part Number	Chip Material	Emitting Color	λp (nm) / x	λd (nm) / y	Lens Color	VF (V)		IV (mcd)			Viewing Angle
						Typ.	Max.	IF=mA	Min.	Typ.	2θ ½

5mm Round Standard With Flange Super Bright LED Lamps, 45°, T-1 3/4

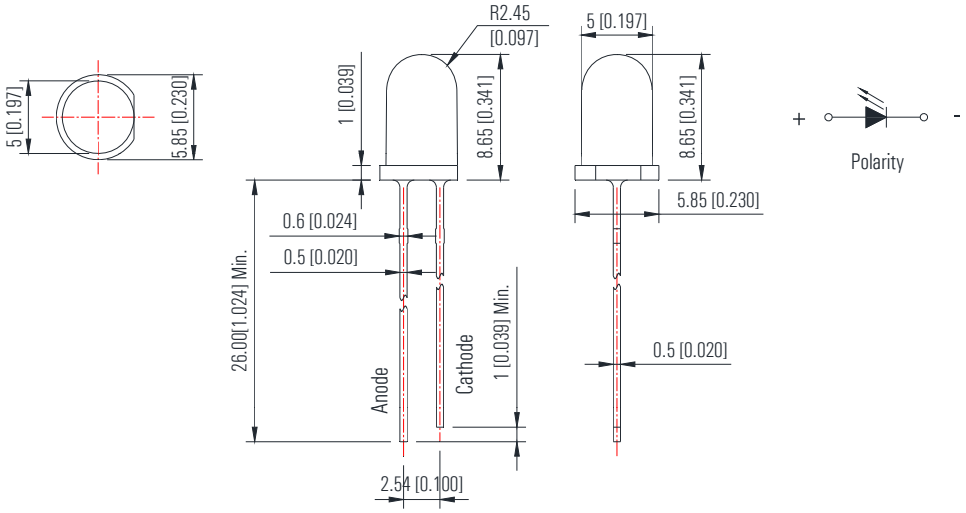

503VC2E-2BE	AlGaInP	Super Bright Red	632	624	Water Clear	2.00	2.40	20	600	1000	45
503VC2E-4CE	AlGaInP	Super Bright Red	632	624		2.00	2.40		2900	5000	
503AC2E-2BE	AlGaInP	Super Bright Orange	610	605		2.00	2.40		780	1300	
503AC2E-4CE	AlGaInP	Super Bright Orange	610	605		2.00	2.40		2200	3800	
503YC2E-2BE	AlGaInP	Super Bright Yellow	592	590		2.00	2.40		600	1000	
503YC2E-4CE	AlGaInP	Super Bright Yellow	592	590		2.00	2.40		1300	2200	
504PGC2E-G5-2BE	InGaN	Pure Green	520	525		3.20	3.60		14000	23000	
504BC2E-B4-2BE	InGaN	Blue	468	470		3.20	3.60		2900	5000	

5mm Round Standard With Flange Super Bright LED Lamps, T-1 3/4

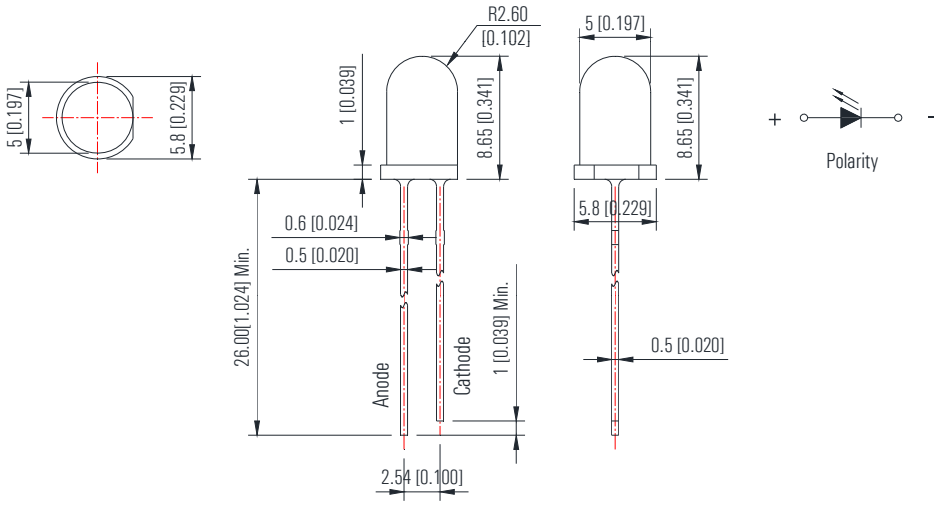

503VC2V-2BD	AlGaInP	Super Bright Red	632	624	Water Clear	2.00	2.40	20	780	1300	30
503VC2V-4CD	AlGaInP	Super Bright Red	632	624		2.00	2.40		2900	5000	
503AC2V-2BD	AlGaInP	Super Bright Orange	610	605		2.00	2.40		1300	2200	
503AC2V-4CD	AlGaInP	Super Bright Orange	610	605		2.00	2.40		2900	5000	
503YC2V-2BD	AlGaInP	Super Bright Yellow	592	590		2.00	2.40		1000	1700	
503YC2V-4CD	AlGaInP	Super Bright Yellow	592	590		2.00	2.40		2900	5000	
504PGC2V-G5-2BD	InGaN	Pure Green	520	525		3.20	3.60		14000	23000	
504BC2V-B4-2BD	InGaN	Blue	468	470		3.20	3.60		2900	5000	
504UVAC2V-Q5D	InGaN	UV	395	/		3.20	4.00		160	270	25
504UVAC2V-Q6D	InGaN	UV	400	/		3.20	4.00		160	270	

Part Number	Chip Material	Emitting Color	λp (nm) / x	λd (nm) / y	Lens Color	VF (V)		IV (mcd)			Viewing Angle
						Typ.	Max.	IF=mA	Min.	Typ.	2θ ½

8mm Round With Flange Super Bright LED Lamps

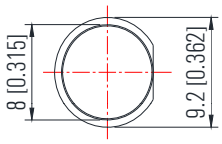

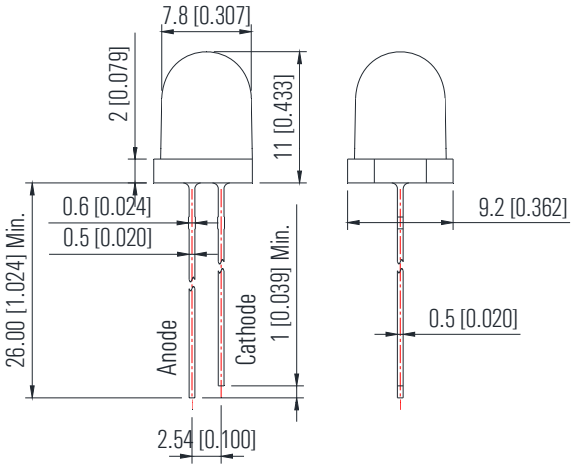

803VC2C-2BD	AlGaInP	Super Bright Red	632	624	Water Clear	2.00	2.40	20	1300	2200	30
803VC2C-4CD	AlGaInP	Super Bright Red	632	624		2.00	2.40		3800	6500	
803AC2C-2BD	AlGaInP	Super Bright Orange	610	605		2.00	2.40		1000	1700	
803AC2C-4CD	AlGaInP	Super Bright Orange	610	605		2.00	2.40		3800	6500	
803YC2C-2BD	AlGaInP	Super Bright Yellow	592	590		2.00	2.40		780	1300	
803YC2C-4CD	AlGaInP	Super Bright Yellow	592	590		2.00	2.40		1700	2900	
804PGC2C-G5-2BD	InGaN	Pure Green	520	525		3.20	3.60		11000	18000	25
804BC2C-B4-2BD	InGaN	Blue	468	470		3.20	3.60		2900	5000	
804UVAC2C-Q5D	InGaN	UV	395	/		3.20	4.00		90	160	20
804UVAC2C-Q6D	InGaN	UV	400	/		3.20	4.00		120	210	

10mm Round With Flange Super Bright LED Lamps

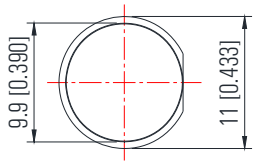

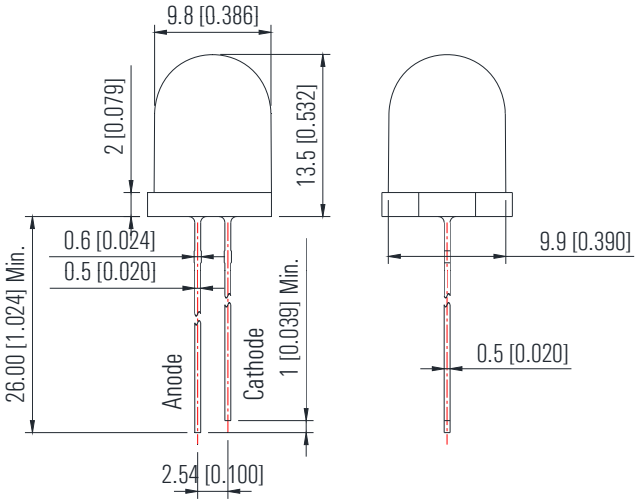

1003VC2R-2BC	AlGaInP	Super Bright Red	632	624	Water Clear	2.00	2.40	20	1300	2200	20
1003VC2R-4CC	AlGaInP	Super Bright Red	632	624		2.00	2.40		6500	11000	
1003AC2R-2BC	AlGaInP	Super Bright Orange	610	605		2.00	2.40		1300	2200	
1003AC2R-4CC	AlGaInP	Super Bright Orange	610	605		2.00	2.40		8500	14000	
1003YC2R-2BC	AlGaInP	Super Bright Yellow	592	590		2.00	2.40		1700	2900	
1003YC2R-4CC	AlGaInP	Super Bright Yellow	592	590		2.00	2.40		5000	8500	
1004PGC2R-G5-2BC	InGaN	Pure Green	520	525		3.20	3.60		30000	51000	
1004BC2R-B4-2BC	InGaN	Blue	468	470		3.20	3.60		5000	8500	
1004UVAC2R-Q5C	InGaN	UV	395	/		3.20	4.00		120	210	
1004UVAC2R-Q6C	InGaN	UV	400	/		3.20	4.00		120	210	

Part Number	Chip Material	Emitting Color	λp (nm) / x	λd (nm) / y	Lens Color	VF (V)		IV (mcd)			Viewing Angle
						Typ.	Max.	IF=mA	Min.	Typ.	2θ ½

3mm Cylindrical Without Flange Type LED Lamps

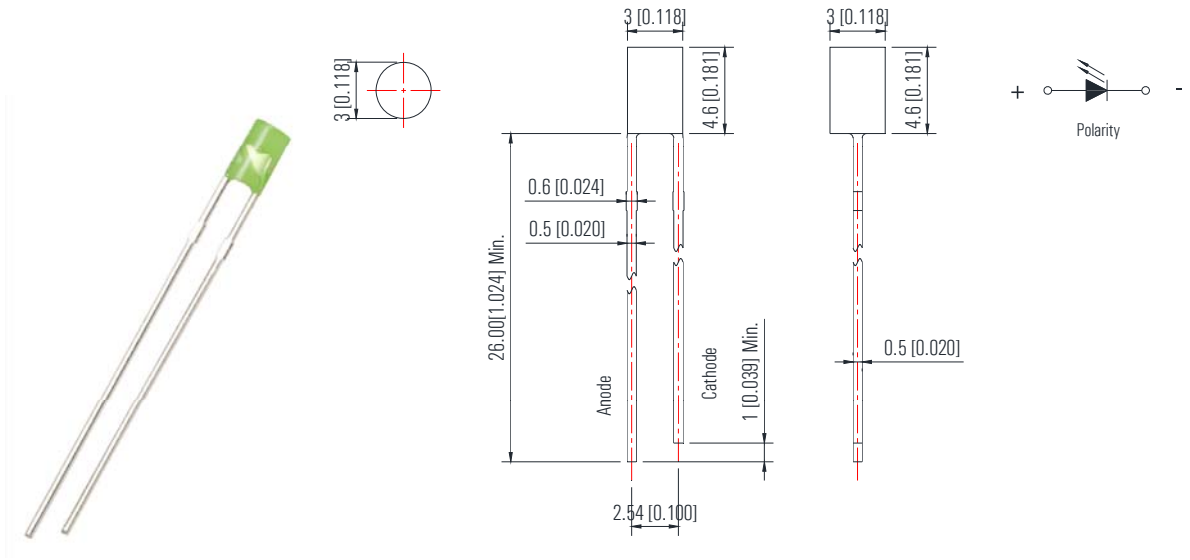

304VD4J-1B	AlGaInP	Super Bright Red	632	624	Red Diffused	2.00	2.40	20	70	120	130
304AD4J-1B	AlGaInP	Super Bright Orange	610	605	Orange Diffused	2.00	2.40		45	90	
304YD4J-1B	AlGaInP	Super Bright Yellow	592	590	Yellow Diffused	2.00	2.40		70	120	
304GD4J-1B	AlGaInP/GaAs	Super Yellow Green	573	571	Green Diffused	2.00	2.40		20	45	
304PGD4J-G5-2B	InGaN	Pure Green	520	525	Green Diffused	3.20	3.60		1300	2200	110
304BD4J-B4-2B	InGaN	Blue	468	470	Blue Diffused	3.20	3.60		210	350	

3mm Cylindrical With Flange LED Lamps

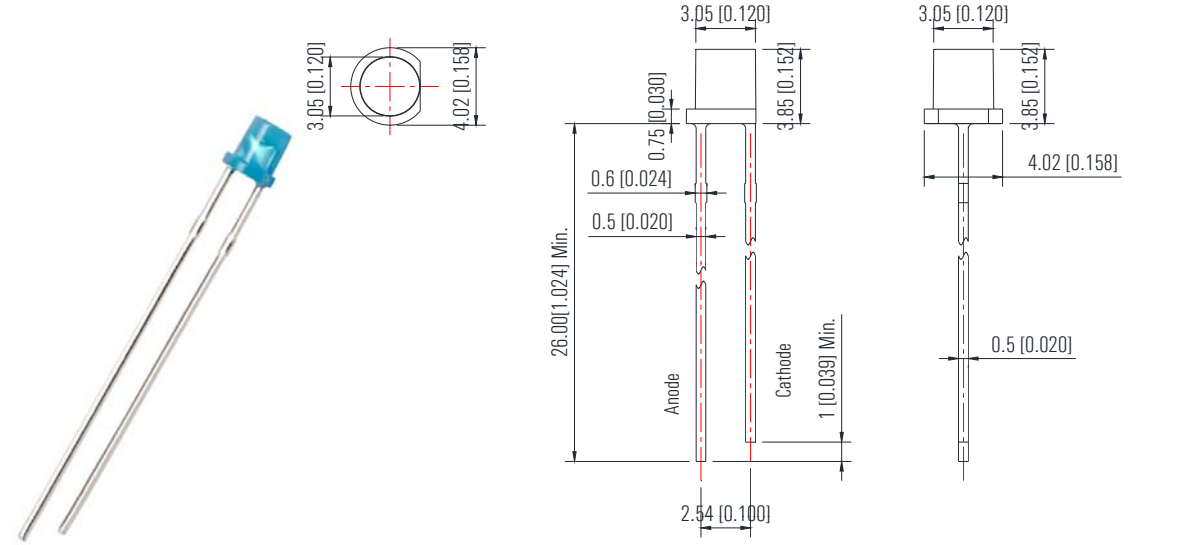

304VD1X-1B	AlGaInP	Super Bright Red	632	624	Red Diffused	2.00	2.40	20	70	120	130
304AD1X-1B	AlGaInP	Super Bright Orange	610	605	Orange Diffused	2.00	2.40		90	160	
304YD1X-1B	AlGaInP	Super Bright Yellow	592	590	Yellow Diffused	2.00	2.40		45	90	
304GD1X-1B	AlGaInP/GaAs	Super Yellow Green	573	571	Green Diffused	2.00	2.40		13	30	
304PGD1X-G5-2B	InGaN	Pure Green	520	525	Green Diffused	3.20	3.60		1300	2200	
304BD1X-B4-2B	InGaN	Blue	468	470	Blue Diffused	3.20	3.60		210	350	

Part Number	Chip Material	Emitting Color	λp (nm) / x	λd (nm) / y	Lens Color	VF (V)		IV (mcd)			Viewing Angle
						Typ.	Max.	IF=mA	Min.	Typ.	2θ ½

5mm Cylindrical Without Flange Type LED Lamps

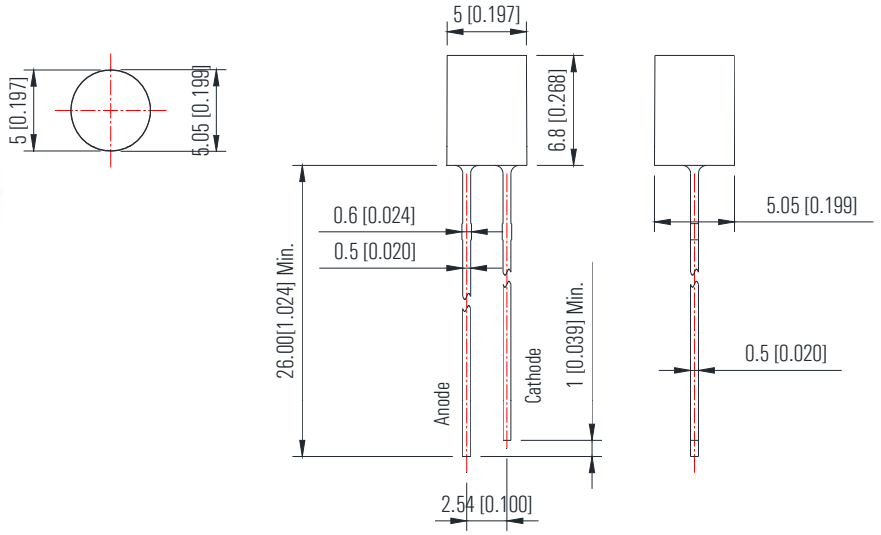

503VD2Q-1B	AlGaInP	Super Bright Red	632	624	Red Diffused	2.00	2.40	20	70	120	130
503AD2Q-1B	AlGaInP	Super Bright Orange	610	605	Orange Diffused	2.00	2.40		45	90	
503YD2Q-1B	AlGaInP	Super Bright Yellow	592	590	Yellow Diffused	2.00	2.40		70	120	
503GD2Q-1B	AlGaInP/GaAs	Super Yellow Green	573	571	Green Diffused	2.00	2.40		13	30	
504PGD2Q-G5-2B	InGaN	Pure Green	520	525	Green Diffused	3.20	3.60		1000	1700	110
504BD2Q-B4-2B	InGaN	Blue	468	470	Blue Diffused	3.20	3.60		160	270	

5mm Cylindrical With Flange LED Lamps

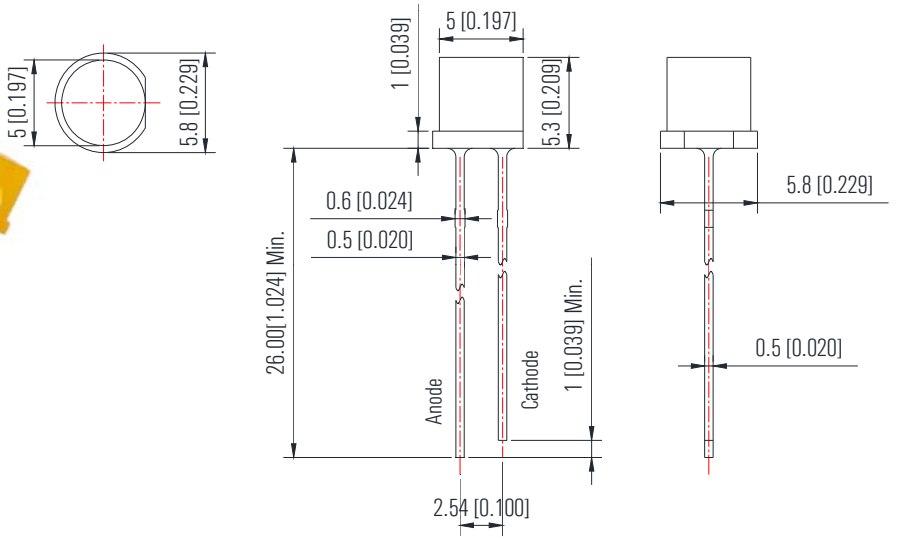

503VD1E-1B	AlGaInP	Super Bright Red	632	624	Red Diffused	2.00	2.40	20	70	120	130
503AD1E-1B	AlGaInP	Super Bright Orange	610	605	Orange Diffused	2.00	2.40		70	120	
503YD1E-1B	AlGaInP	Super Bright Yellow	592	590	Yellow Diffused	2.00	2.40		70	120	
503GD1E-1B	AlGaInP/GaAs	Super Yellow Green	573	571	Green Diffused	2.00	2.40		13	30	
504PGD1E-G5-2B	InGaN	Pure Green	520	525	Green Diffused	3.20	3.60		1000	1700	110
504BD1E-B4-2B	InGaN	Blue	468	470	Blue Diffused	3.20	3.60		210	350	

Part Number	Chip Material	Emitting Color	λp (nm) / x	λd (nm) / y	Lens Color	VF (V)		IV (mcd)			Viewing Angle
						Typ.	Max.	IF=mA	Min.	Typ.	2θ ½

3mm Cylindrical Without Flange Type Super Bright LED Lamps

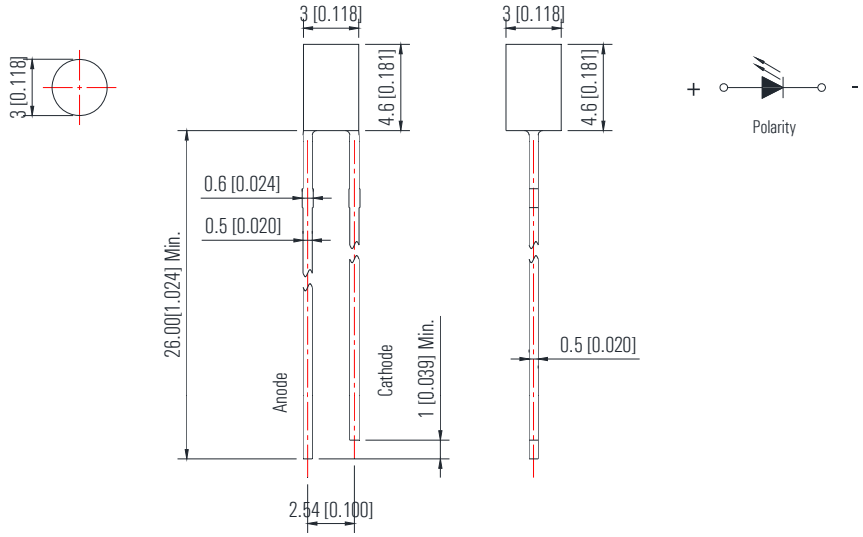

304VC4J-1B	AlGaInP	Super Bright Red	632	624	Water Clear	2.00	2.40	20	160	270	110
304AC4J-2B	AlGaInP	Super Bright Orange	610	605		2.00	2.40		90	160	
304YC4J-1B	AlGaInP	Super Bright Yellow	592	590		2.00	2.40		90	160	
304GC4J-1B	AlGaInP/GaAs	Super Yellow Green	573	571		2.00	2.40		30	70	
304PGC4J-G5-2B	InGaN	Pure Green	520	525		3.20	3.60		2200	3800	100
304BC4J-B4-2B	InGaN	Blue	468	470		3.20	3.60		460	780	

3mm Cylindrical With Flange Super Bright LED Lamps

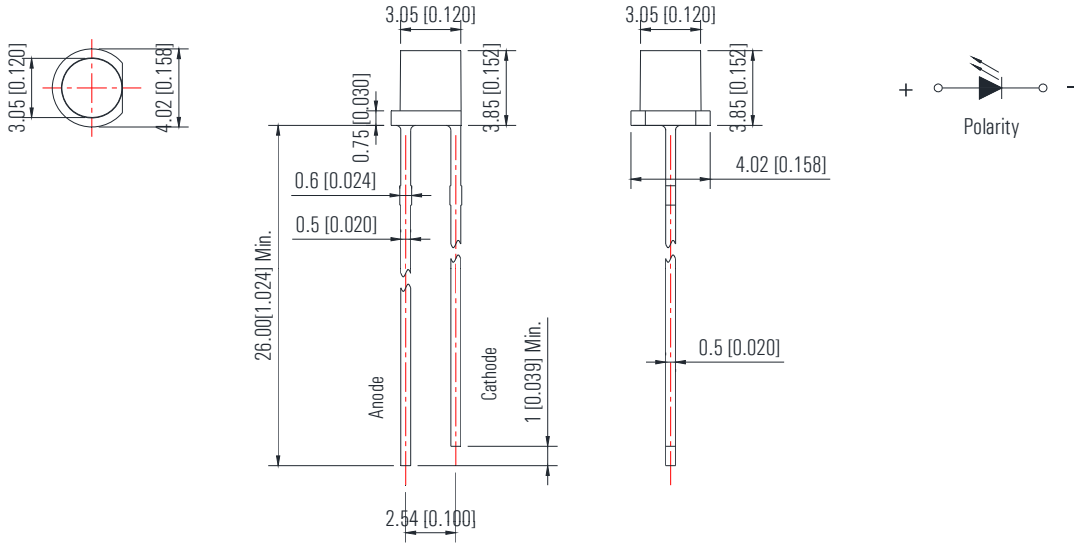

304VC1X-1B	AlGaInP	Super Bright Red	632	624	Water Clear	2.00	2.40	20	90	160	110
304AC1X-2B	AlGaInP	Super Bright Orange	610	605		2.00	2.40		70	120	
304YC1X-1B	AlGaInP	Super Bright Yellow	592	590		2.00	2.40		70	120	
304GC1X-1B	AlGaInP/GaAs	Super Yellow Green	573	571		2.00	2.40		20	45	
304PGC1X-G5-2B	InGaN	Pure Green	520	525		3.20	3.60		2200	3800	100
304BC1X-B4-2B	InGaN	Blue	468	470		3.20	3.60		350	600	

Part Number	Chip Material	Emitting Color	λp (nm) / x	λd (nm) / y	Lens Color	VF (V)		IV (mcd)			Viewing Angle
						Typ.	Max.	IF=mA	Min.	Typ.	2θ ½

5mm Cylindrical Without Flange Type Super Bright LED Lamps

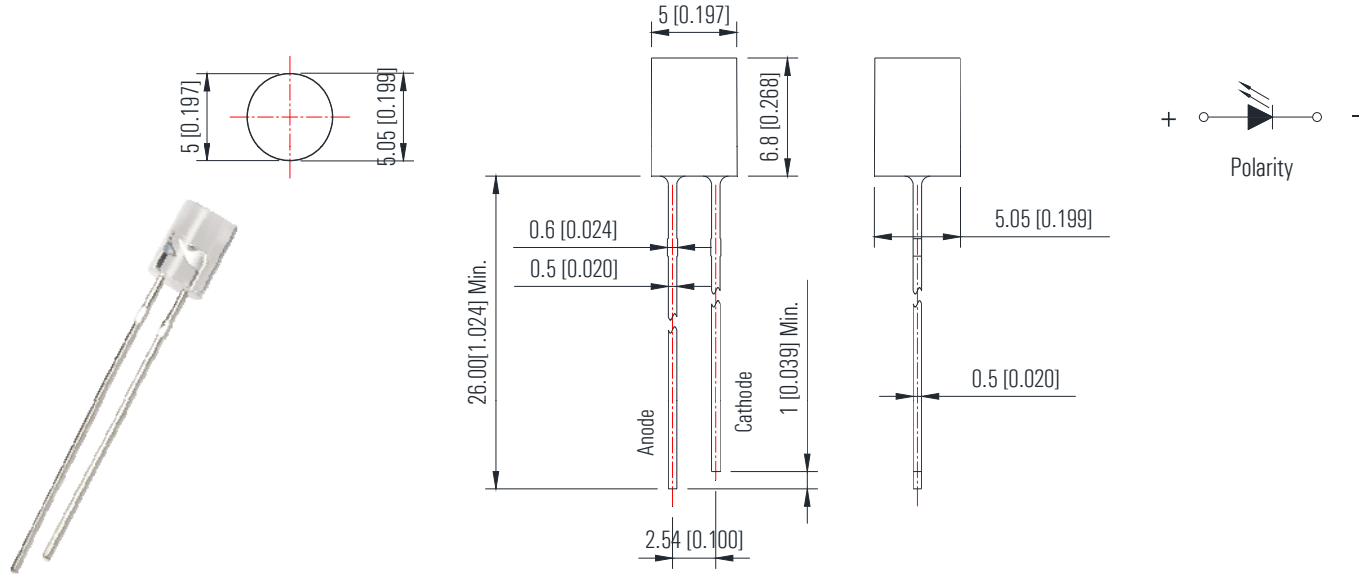

503VC2Q-1B	AlGaInP	Super Bright Red	632	624	Water Clear	2.00	2.40	20	120	210	110
503AC2Q-2B	AlGaInP	Super Bright Orange	610	605		2.00	2.40		160	270	
503YC2Q-1B	AlGaInP	Super Bright Yellow	592	590		2.00	2.40		160	270	
503GC2Q-1B	AlGaInP/GaAs	Super Yellow Green	573	571		2.00	2.40		30	70	
504PGC2Q-G5-2B	InGaN	Pure Green	520	525		3.20	3.60		2200	3800	100
504BC2Q-B4-2B	InGaN	Blue	468	470		3.20	3.60		460	780	

5mm Cylindrical With Flange LED Lamps

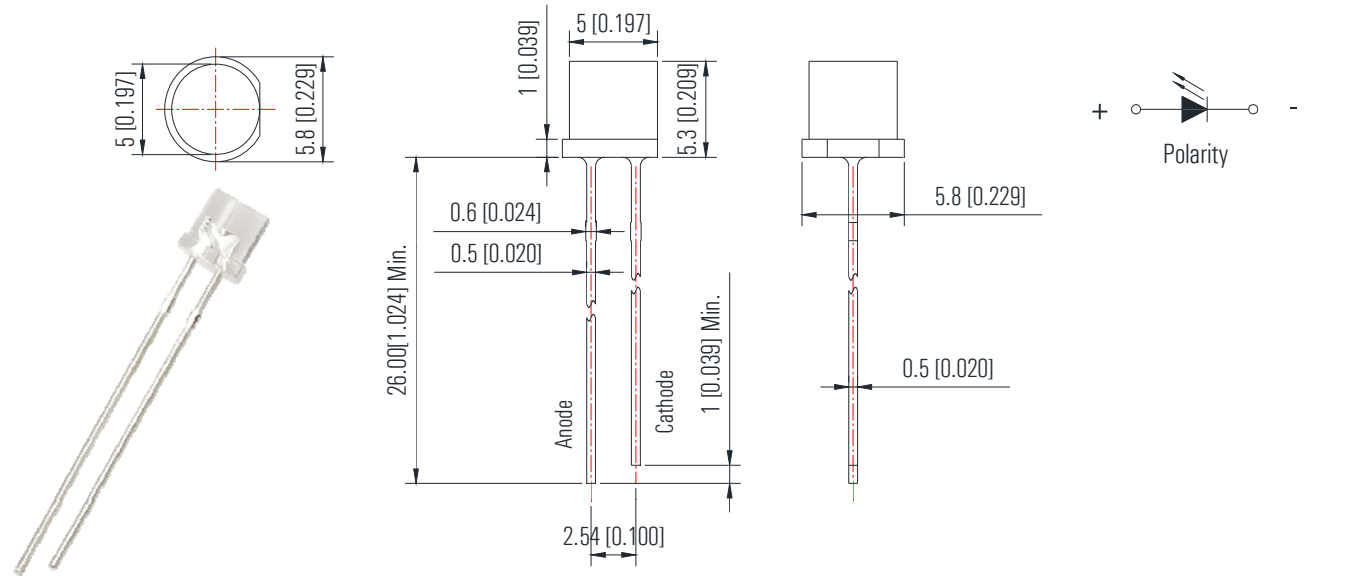

503VC1E-1B	AlGaInP	Super Bright Red	632	624	Water Clear	2.00	2.40	20	120	210	110
503AC1E-2B	AlGaInP	Super Bright Orange	610	605		2.00	2.40		120	210	
503YC1E-1B	AlGaInP	Super Bright Yellow	592	590		2.00	2.40		160	270	
503GC1E-1B	AlGaInP/GaAs	Super Yellow Green	573	571		2.00	2.40		20	45	
504PGC1E-G5-2B	InGaN	Pure Green	520	525		3.20	3.60		1300	2200	100
504BC1E-B4-2B	InGaN	Blue	468	470		3.20	3.60		460	780	

Part Number	Chip Material	Emitting Color	λp (nm) / x	λd (nm) / y	Lens Color	VF (V)		IV (mcd)			Viewing Angle
						Typ.	Max.	IF=mA	Min.	Typ.	2θ ½

2×3mm Rectangular Flangeless LED Lamps

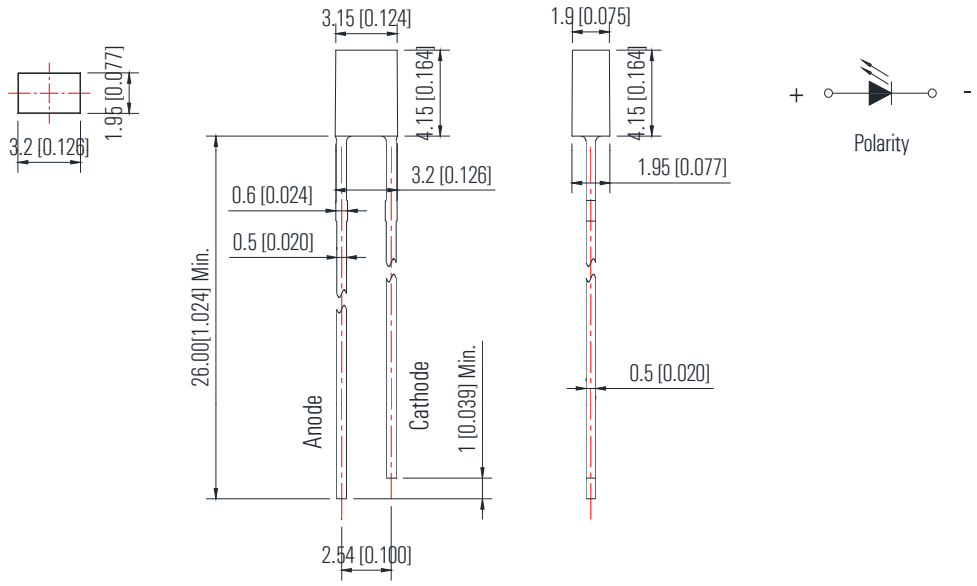

234VD2Q-1B	AlGaInP	Super Bright Red	632	624	Red Diffused	2.00	2.40	20	70	120	130
234AD2Q-1B	AlGaInP	Super Bright Orange	610	605	Orange Diffused	2.00	2.40		45	90	
234YD2Q-1B	AlGaInP	Super Bright Yellow	592	590	Yellow Diffused	2.00	2.40		30	70	
234GD2Q-1B	AlGaInP/GaAs	Super Yellow Green	573	571	Green Diffused	2.00	2.40		20	45	
234PGD2Q-G5-2B	InGaN	Pure Green	520	525	Green Diffused	3.20	3.60		1300	2200	
234BD2Q-B4-2B	InGaN	Blue	468	470	Blue Diffused	3.20	3.60		160	270	

2×3mm Rectangular Flangeless LED Lamps

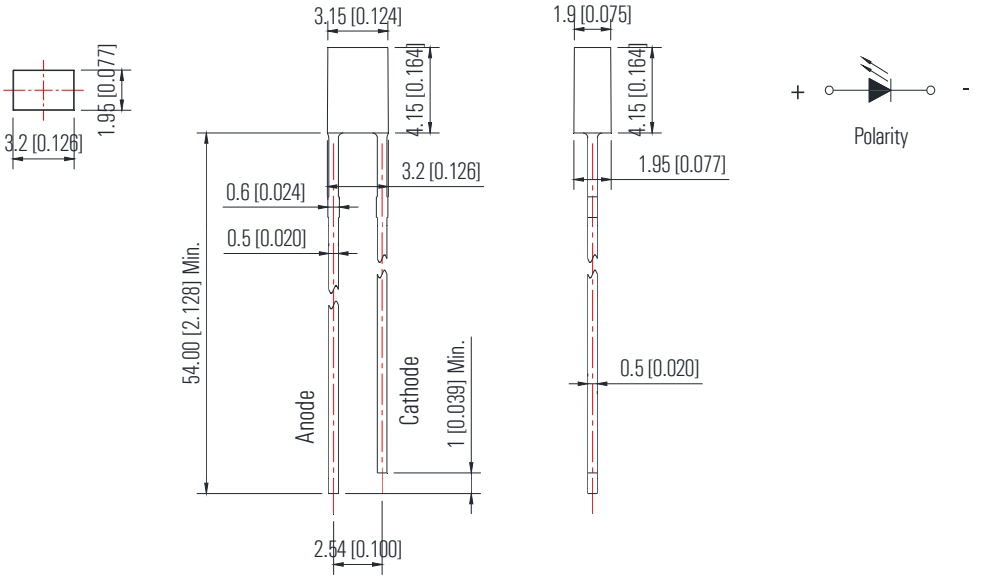

234VD2Q-1B-L54	AlGaInP	Super Bright Red	632	624	Red Diffused	2.00	2.40	20	70	120	130
234AD2Q-1B-L54	AlGaInP	Super Bright Orange	610	605	Orange Diffused	2.00	2.40		45	90	
234YD2Q-1B-L54	AlGaInP	Super Bright Yellow	592	590	Yellow Diffused	2.00	2.40		30	70	
234GD2Q-1B-L54	AlGaInP/GaAs	Super Yellow Green	573	571	Green Diffused	2.00	2.40		20	45	

Part Number	Chip Material	Emitting Color	λp (nm) / x	λd (nm) / y	Lens Color	VF (V)		IV (mcd)			Viewing Angle
						Typ.	Max.	IF=mA	Min.	Typ.	2θ ½

2×5mm Rectangular Flangeless LED Lamps

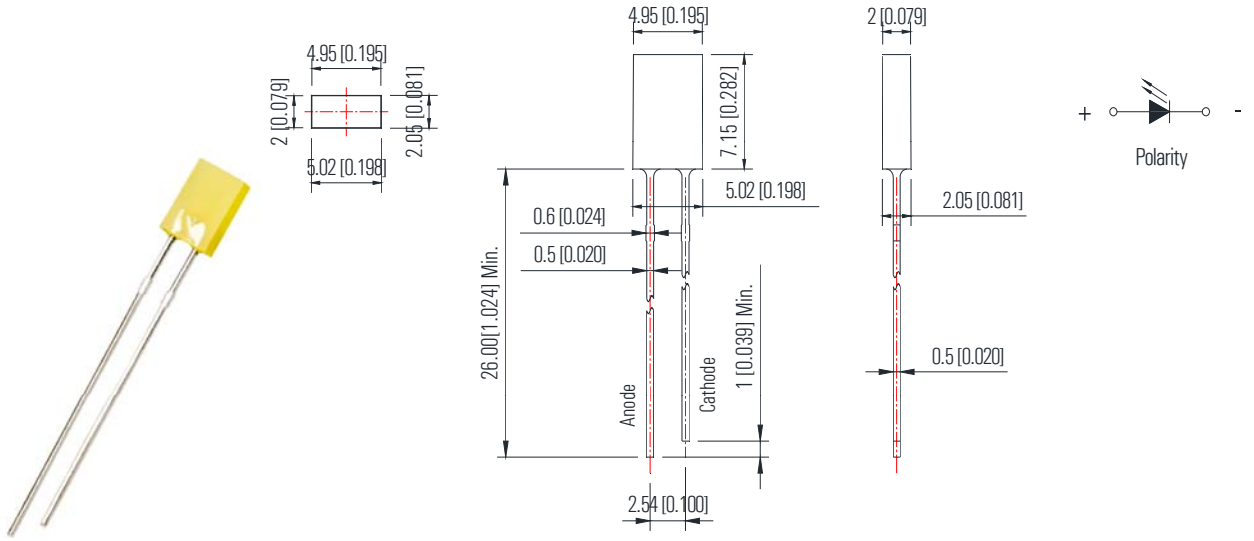

253VD1F-1B	AlGaInP	Super Bright Red	632	624	Red Diffused	2.00	2.40	20	70	120	130
253AD1F-1B	AlGaInP	Super Bright Orange	610	605	Orange Diffused	2.00	2.40		20	45	
253YD1F-1B	AlGaInP	Super Bright Yellow	592	590	Yellow Diffused	2.00	2.40		30	70	
253GD1F-1B	AlGaInP/GaAs	Super Yellow Green	573	571	Green Diffused	2.00	2.40		13	30	
254PGD1F-G5-2B	InGaN	Pure Green	520	525	Green Diffused	3.20	3.60		600	1000	
254BD1F-B4-2B	InGaN	Blue	468	470	Blue Diffused	3.20	3.60		160	270	

2×5mm Rectangular With Flange LED Lamps

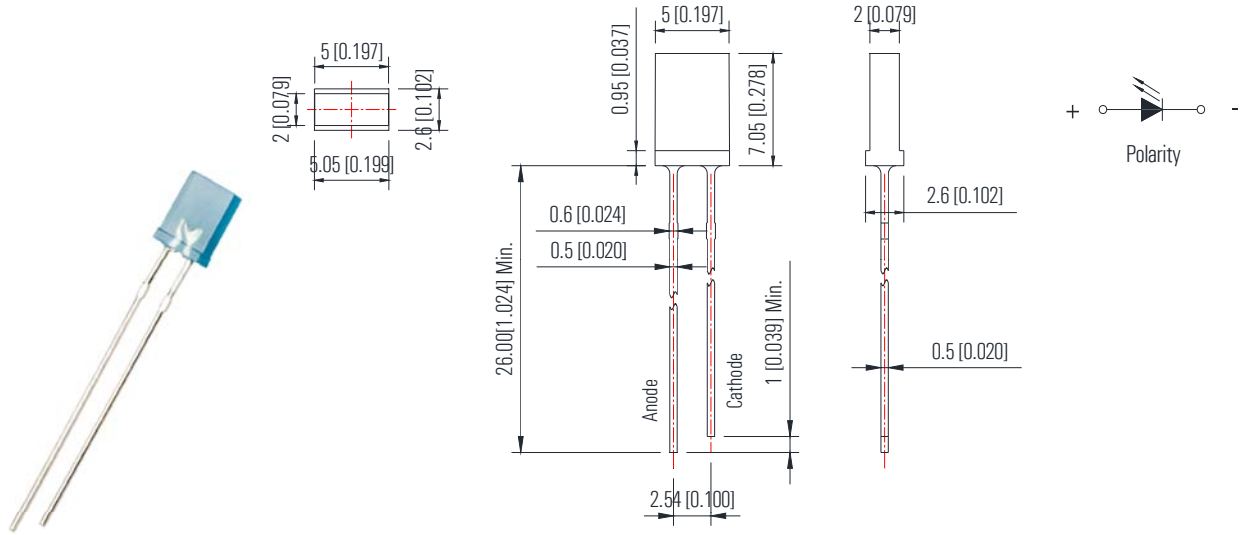

253VD1G-1B	AlGaInP	Super Bright Red	632	624	Red Diffused	2.00	2.40	20	45	90	130
253AD1G-1B	AlGaInP	Super Bright Orange	610	605	Orange Diffused	2.00	2.40		30	70	
253YD1G-1B	AlGaInP	Super Bright Yellow	592	590	Yellow Diffused	2.00	2.40		20	45	
253GD1G-1B	AlGaInP/GaAs	Super Yellow Green	573	571	Green Diffused	2.00	2.40		9	20	
254PGD1G-G5-2B	InGaN	Pure Green	520	525	Green Diffused	3.20	3.60		780	1300	
254BD1G-B4-2B	InGaN	Blue	468	470	Blue Diffused	3.20	3.60		160	270	

Part Number	Chip Material	Emitting Color	λp (nm) / x	λd (nm) / y	Lens Color	VF (V)		IV (mcd)			Viewing Angle
						Typ.	Max.	IF=mA	Min.	Typ.	2θ ½

2×3mm Rectangular Flangeless Super Bright LED Lamps

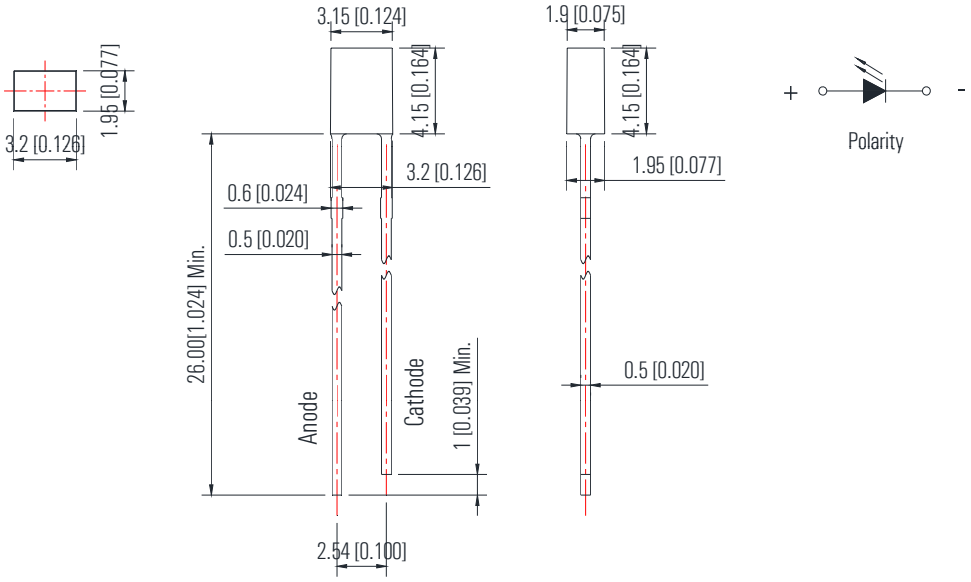

234VC2Q-2B	AlGaInP	Super Bright Red	632	624	Water Clear	2.00	2.40	20	90	160	130
234AC2Q-2B	AlGaInP	Super Bright Orange	610	605		2.00	2.40		120	210	
234YC2Q-2B	AlGaInP	Super Bright Yellow	592	590		2.00	2.40		90	160	
234PGC2Q-G5-2B	InGaN	Pure Green	520	525		3.20	3.60		1700	2900	
234BC2Q-B4-2B	InGaN	Blue	468	470		3.20	3.60		460	780	

6.22×3.68mm Rectangular Flangeless LED Lamps

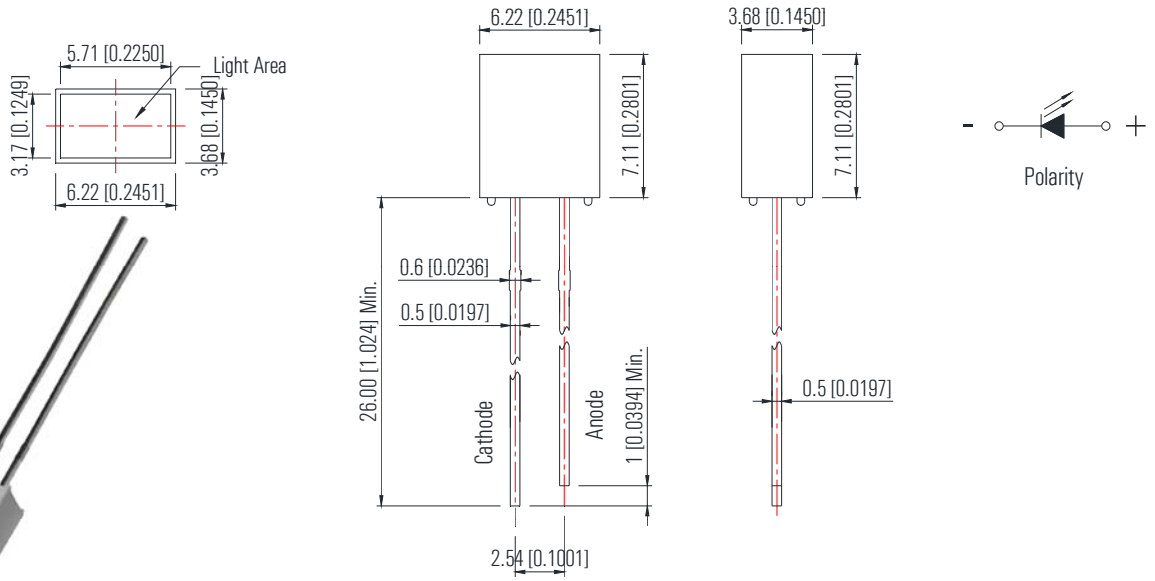

463VDS	AlGaInP	Super Bright Red	632	624	Red Diffused	2.00	2.40	20	20	45	110
463YDS	AlGaInP	Super Bright Yellow	592	590	Yellow Diffused	2.00	2.40		20	45	
463GDS	AlGaInP/GaAs	Super Yellow Green	573	571	Green Diffused	2.00	2.40		5	12	

Part Number	Chip Material	Emitting Color	λp (nm) / x	λd (nm) / y	Lens Color	VF (V)		IV (mcd)			Viewing Angle
						Typ.	Max.	IF=mA	Min.	Typ.	2θ ½

3.9×3.2mm Oval LED Lamps

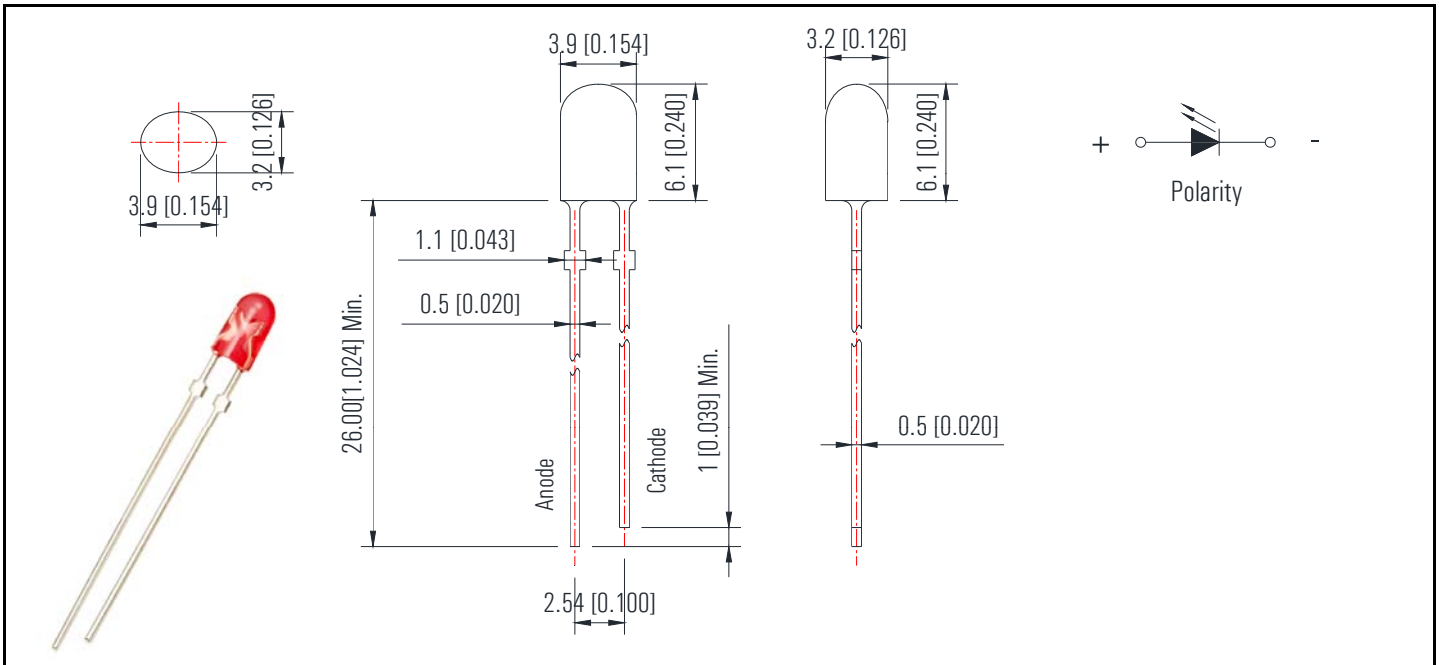

434VD2Q-4C-T	AlGaInP	Super Bright Red	632	624	Red Diffused	2.00	2.40	20	780	1300	110/40
434YD2Q-4C-T	AlGaInP	Super Bright Yellow	592	590	Yellow Diffused	2.00	2.40		780	1300	
434PGD2Q-G5-2B-T	InGaN	Pure Green	520	525	Green Diffused	3.20	3.60		2200	3800	
434BD2Q-B4-2B-T	InGaN	Blue	468	470	Blue Diffused	3.20	3.60		350	600	

5.2×3.8mm Oval LED Lamps

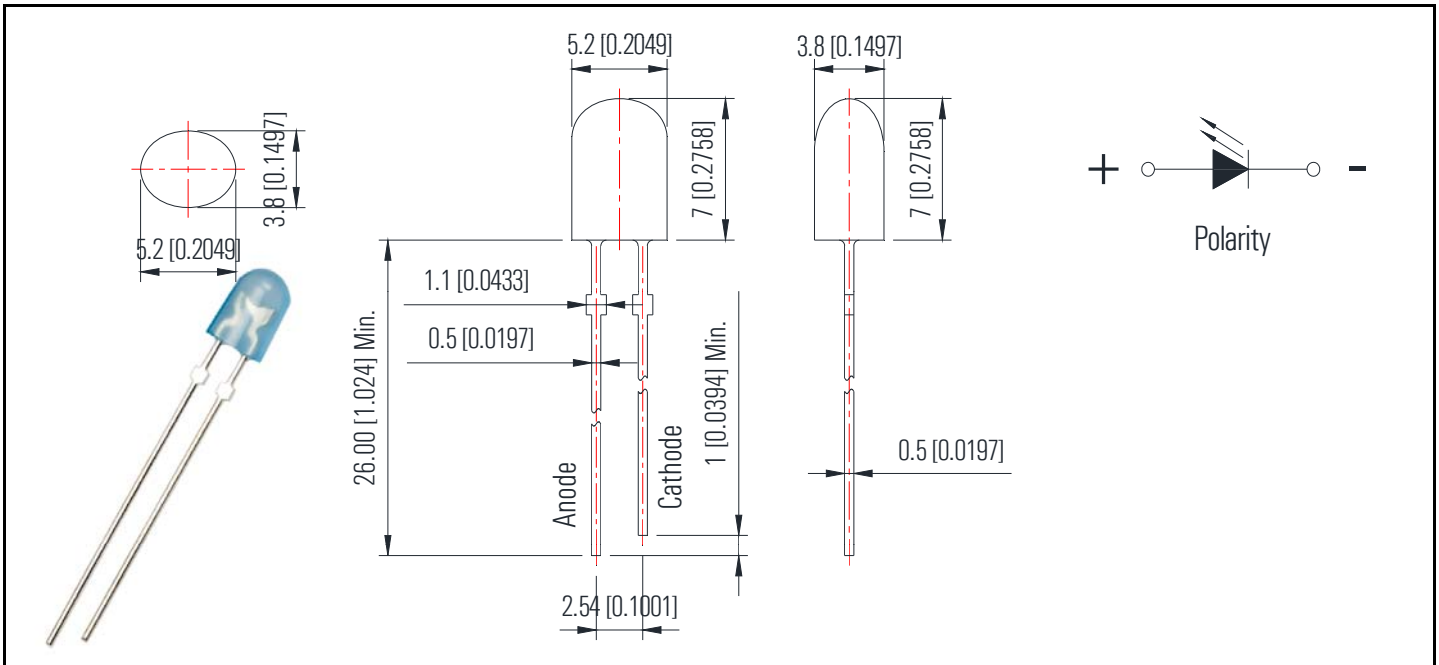

544VD2I-4C-T	AlGaInP	Super Bright Red	632	624	Red Diffused	2.00	2.40	20	780	1300	110/40
544YD2I-4C-T	AlGaInP	Super Bright Yellow	592	590	Yellow Diffused	2.00	2.40		600	1000	
544PGD2I-G5-2B-T	InGaN	Pure Green	520	525	Green Diffused	3.20	3.60		1700	2900	
544BD2I-B4-2B-T	InGaN	Blue	468	470	Blue Diffused	3.20	3.60		460	780	

Part Number	Chip Material	Emitting Color	λp (nm) / x	λd (nm) / y	Lens Color	VF (V)		IV (mcd)			Viewing Angle
						Typ.	Max.	IF=mA	Min.	Typ.	2θ ½

2×5mm Bi-Color Without Common Polarity Type LED

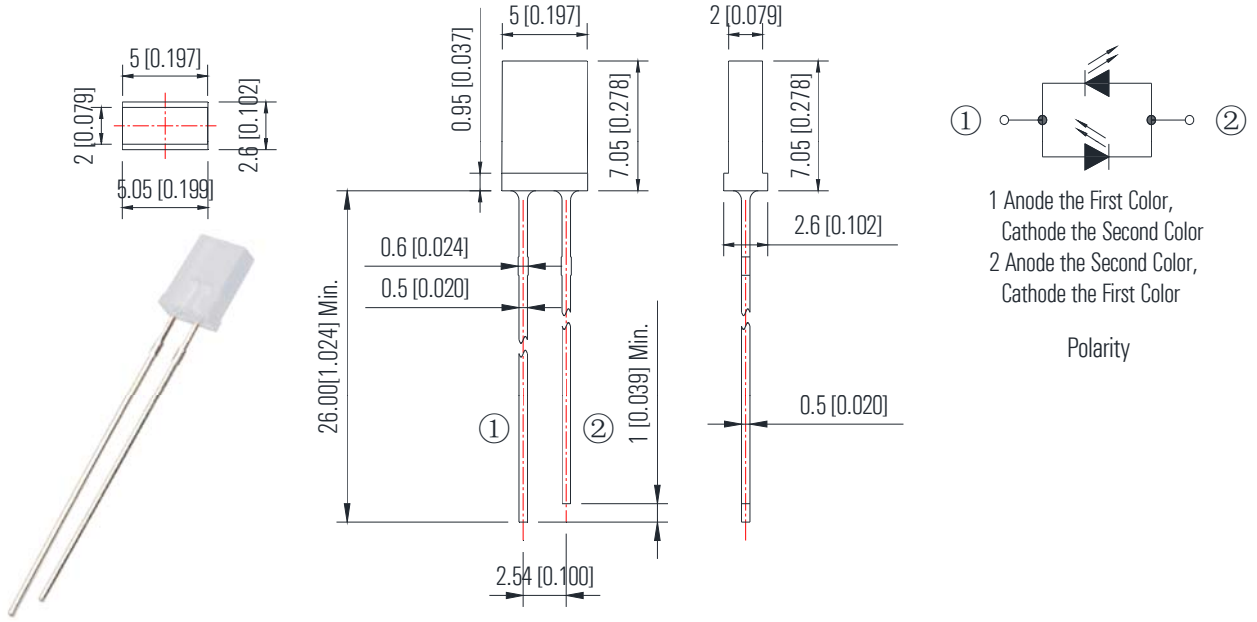

257VGM1G-1B	AlGaInP	Super Bright Red	632	624	White Diffused	2.00	2.40	20	30	70	150
	AlGaInP/GaAs	Super Yellow Green	573	571		2.00	2.40		6	13	
257YGM1G-1B	AlGaInP	Super Bright Yellow	592	590		2.00	2.40		30	70	
	AlGaInP/GaAs	Super Yellow Green	573	571		2.00	2.40		9	20	

2×5mm Bi-Color With Common Cathode Type LED

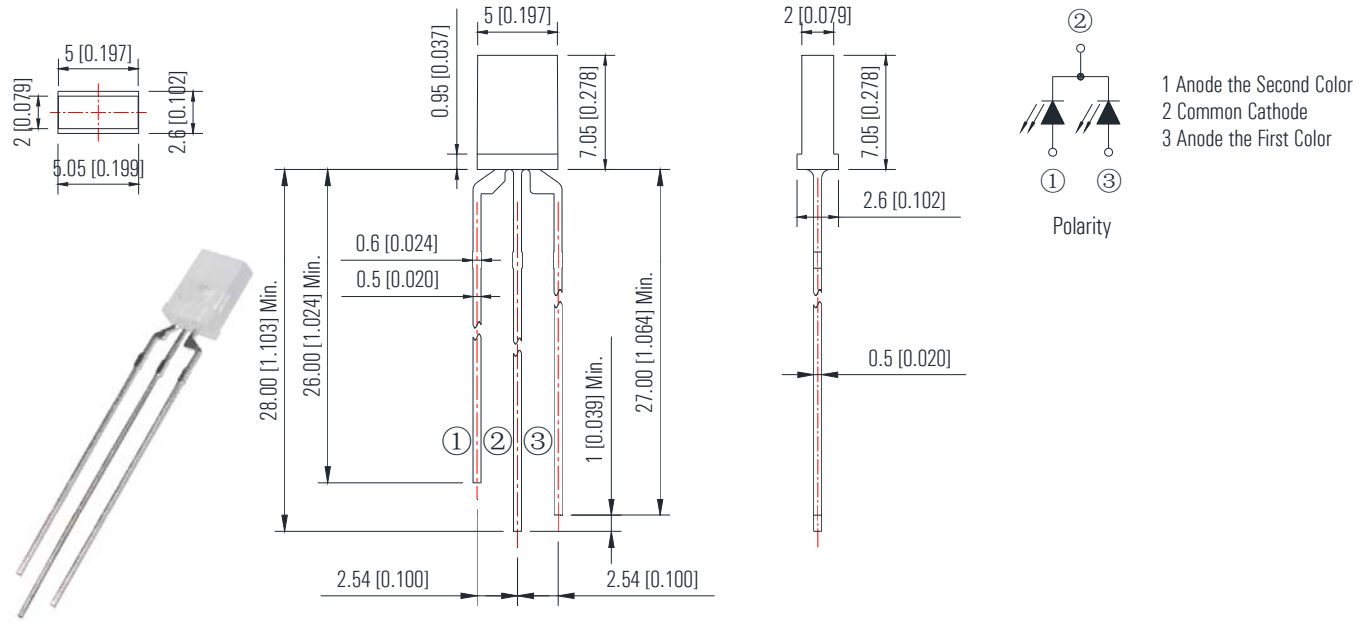

259VGM1G-C-1B	AlGaInP	Super Bright Red	632	624	White Diffused	2.00	2.40	20	45	90	120
	AlGaInP/GaAs	Super Yellow Green	573	571		2.00	2.40		13	30	
259YGM1G-C-1B	AlGaInP	Super Bright Yellow	592	590		2.00	2.40		45	90	
	AlGaInP/GaAs	Super Yellow Green	573	571		2.00	2.40		13	30	

Part Number	Chip Material	Emitting Color	λp (nm) / x	λd (nm) / y	Lens Color	VF (V)		IV (mcd)			Viewing Angle
						Typ.	Max.	IF=mA	Min.	Typ.	2θ ½

3mm Round Bi-Color Without Common Polarity Type LED

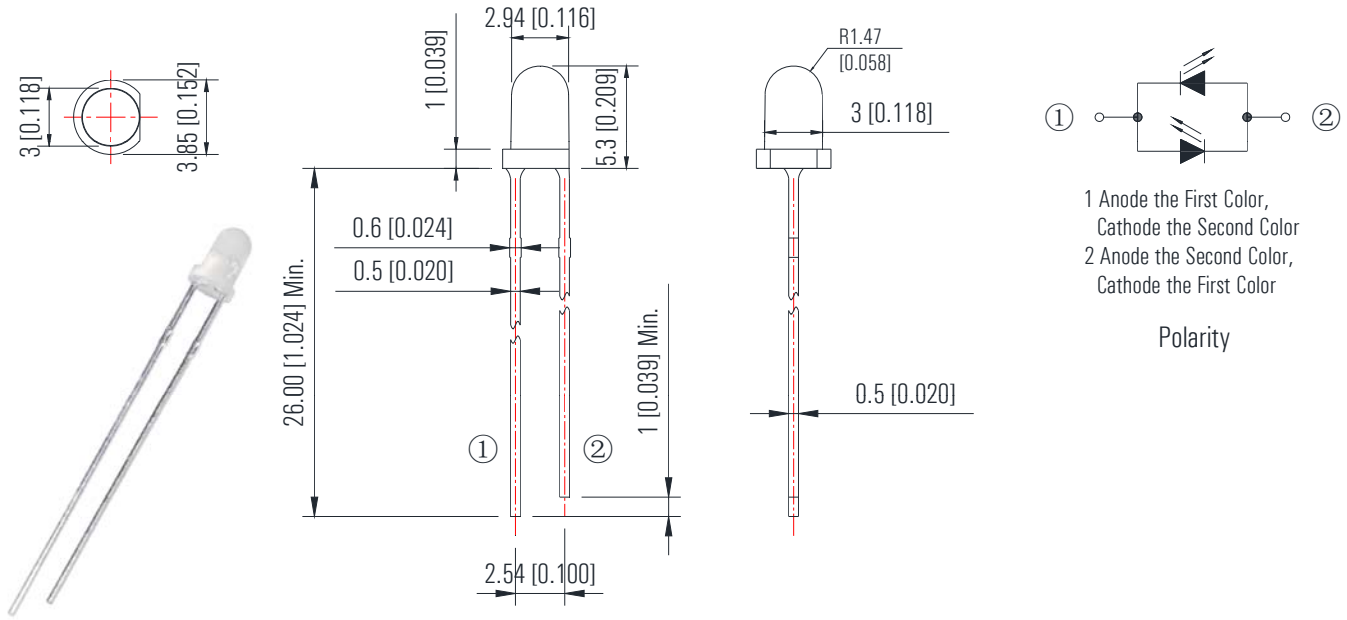

307VGM2E-1B	AlGaInP	Super Bright Red	632	624	White Diffused	2.00	2.40	20	70	170	60
	AlGaInP/GaAs	Super Yellow Green	573	571		2.00	2.40		20	45	
307YGM2E-1B	AlGaInP	Super Bright Yellow	592	590		2.00	2.40		45	90	
	AlGaInP/GaAs	Super Yellow Green	573	571		2.00	2.40		20	45	

3mm Round Bi-Color With Common Cathode Type LED

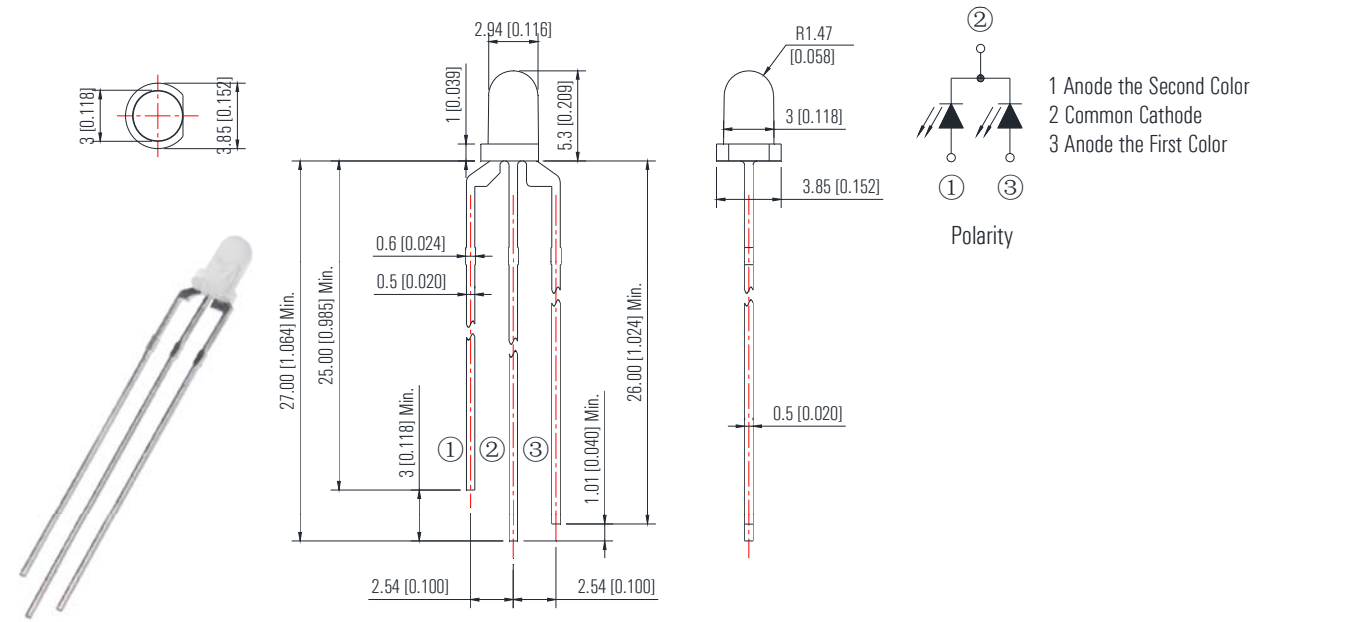

309VGM2E-C-1B	AlGaInP	Super Bright Red	632	624	White Diffused	2.00	2.40	20	110	260	60
	AlGaInP/GaAs	Super Yellow Green	573	571		2.00	2.40		45	110	
309YGM2E-C-1B	AlGaInP	Super Bright Yellow	592	590		2.00	2.40		70	170	
	AlGaInP/GaAs	Super Yellow Green	573	571		2.00	2.40		45	110	

Part Number	Chip Material	Emitting Color	λp (nm) / x	λd (nm) / y	Lens Color	VF (V)		IV (mcd)			Viewing Angle
						Typ.	Max.	IF=mA	Min.	Typ.	2θ ½

3mm Round Bi-Color With Common Anode Type LED

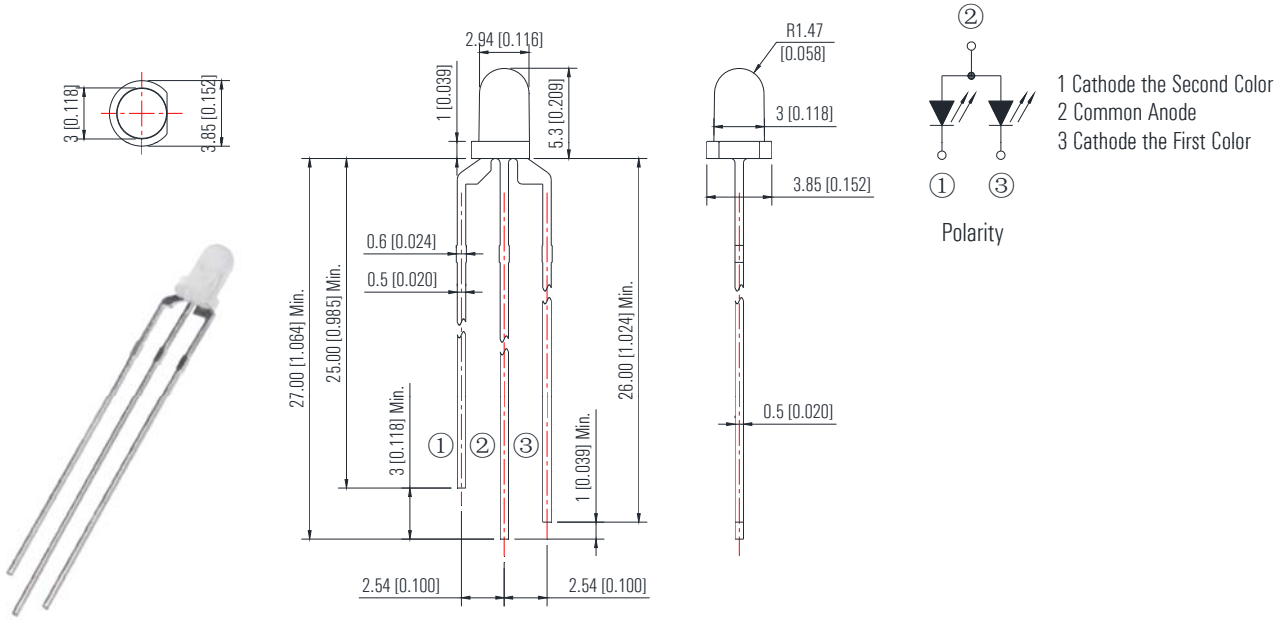

309VPGM2E-A-3C-G52B	AlGaInP	Super Bright Red	632	624	White Diffused	2.00	2.40	20	590	1300	60
	InGaN	Pure Green	520	525		3.20	3.60		2000	4500	
309YPGM2E-A-3C-G52B	AlGaInP	Super Bright Yellow	592	590		2.00	2.40		390	890	
	InGaN	Pure Green	520	525		3.20	3.60		2000	4500	

5mm Round Bi-Color Without Common Polarity Type LED

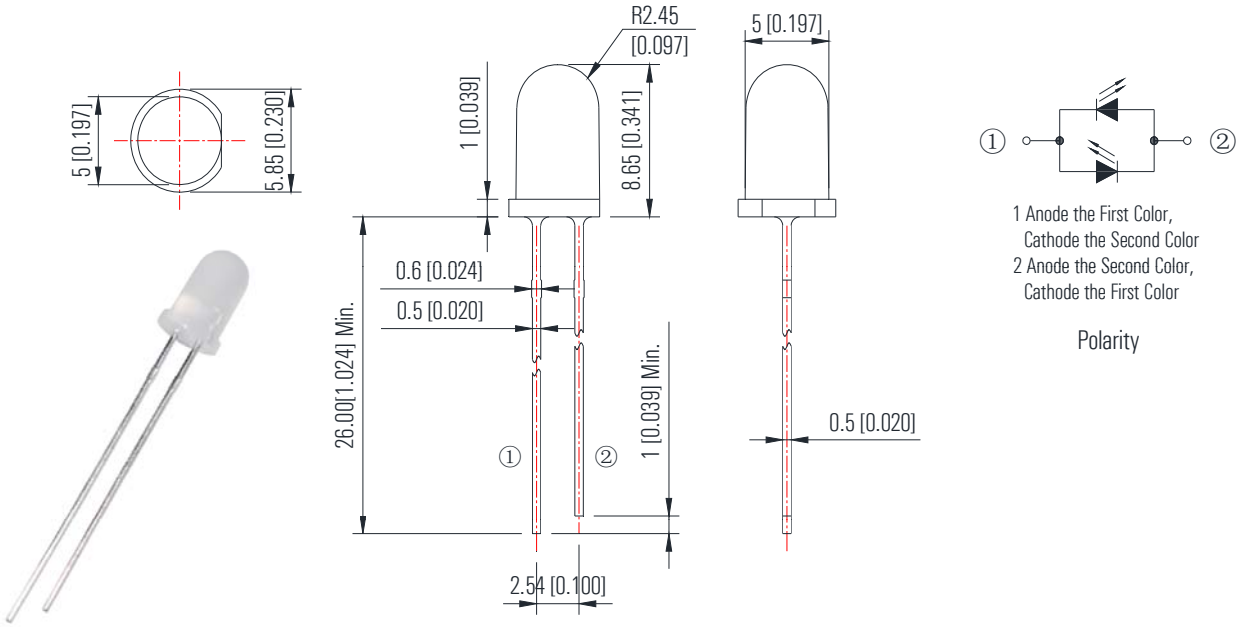

507VGM2E-1B	AlGaInP	Super Bright Red	632	624	White Diffused	2.00	2.40	20	70	170	60
	AlGaInP/GaAs	Super Yellow Green	573	571		2.00	2.40		30	70	
507YGM2E-1B	AlGaInP	Super Bright Yellow	592	590		2.00	2.40		45	90	
	AlGaInP/GaAs	Super Yellow Green	573	571		2.00	2.40		13	30	

Part Number	Chip Material	Emitting Color	λp (nm) / x	λd (nm) / y	Lens Color	VF (V)		IV (mcd)			Viewing Angle
						Typ.	Max.	IF=mA	Min.	Typ.	2θ ½

5mm Round Bi-Color With Common Cathode Type LED

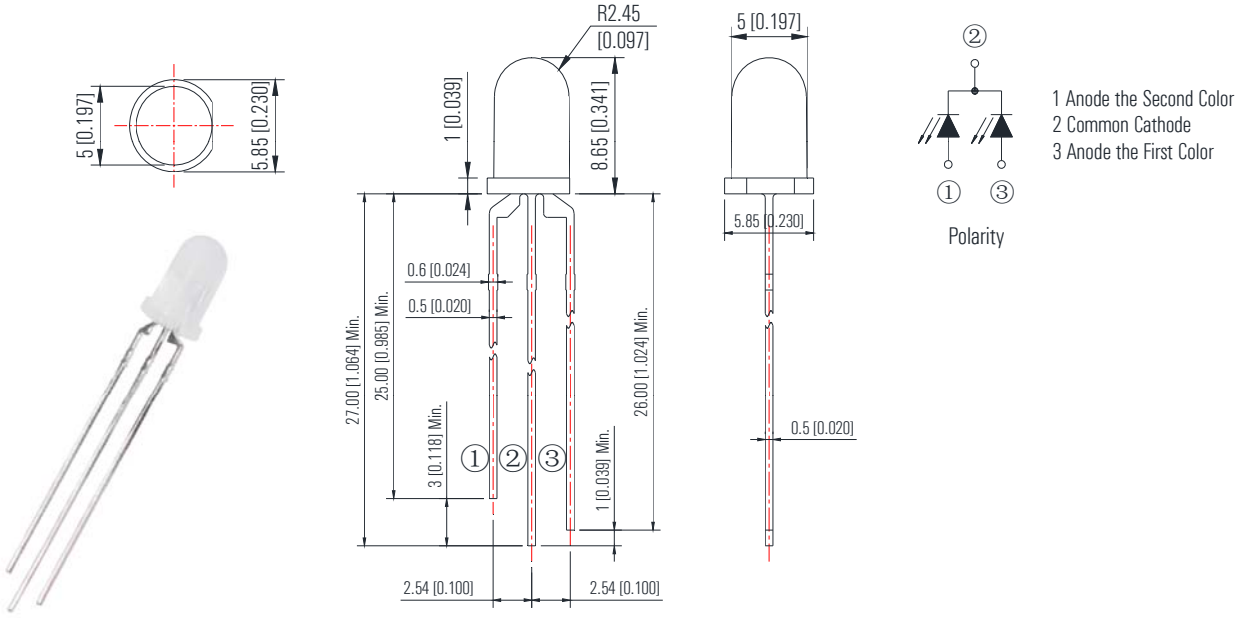

509VGM2E-C-1B	AlGaInP	Super Bright Red	632	624	White Diffused	2.00	2.40	20	110	260	60
	AlGaInP/GaAs	Super Yellow Green	573	571		2.00	2.40		30	70	
509YGM2E-C-1B	AlGaInP	Super Bright Yellow	592	590		2.00	2.40		170	390	
	AlGaInP/GaAs	Super Yellow Green	573	571		2.00	2.40		45	110	

5mm Round Bi-Color With Common Anode Type LED

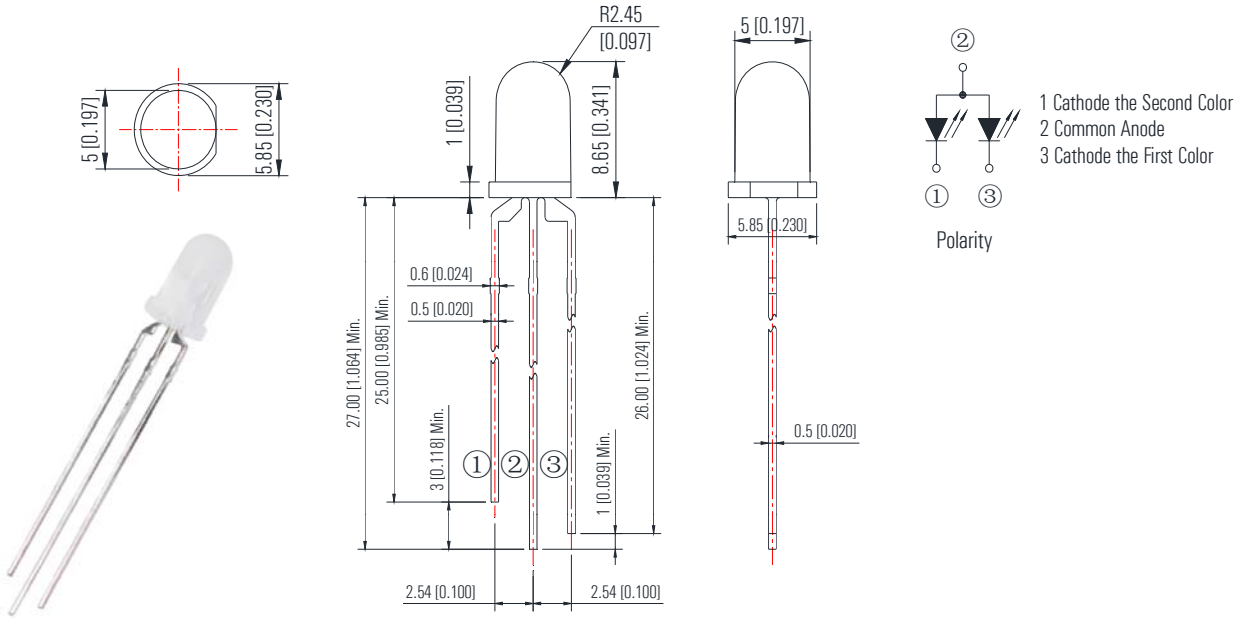

509VPGM2E-A-3C-G52B	AlGaInP	Super Bright Red	632	624	White Diffused	2.00	2.40	20	390	890	60
	InGaN	Pure Green	520	525		3.20	3.60		1300	3000	
509YPGM2E-A-3C-G52B	AlGaInP	Super Bright Yellow	592	590		2.00	2.40		390	890	
	InGaN	Pure Green	520	525		3.20	3.60		1300	3000	

Part Number	Chip Material	Emitting Color	λp (nm) / x	λd (nm) / y	Lens Color	VF (V)		IV (mcd)			Viewing Angle
						Typ.	Max.	IF=mA	Min.	Typ.	2θ ½

5mm Round Multi-Color With Common Cathode Type LED

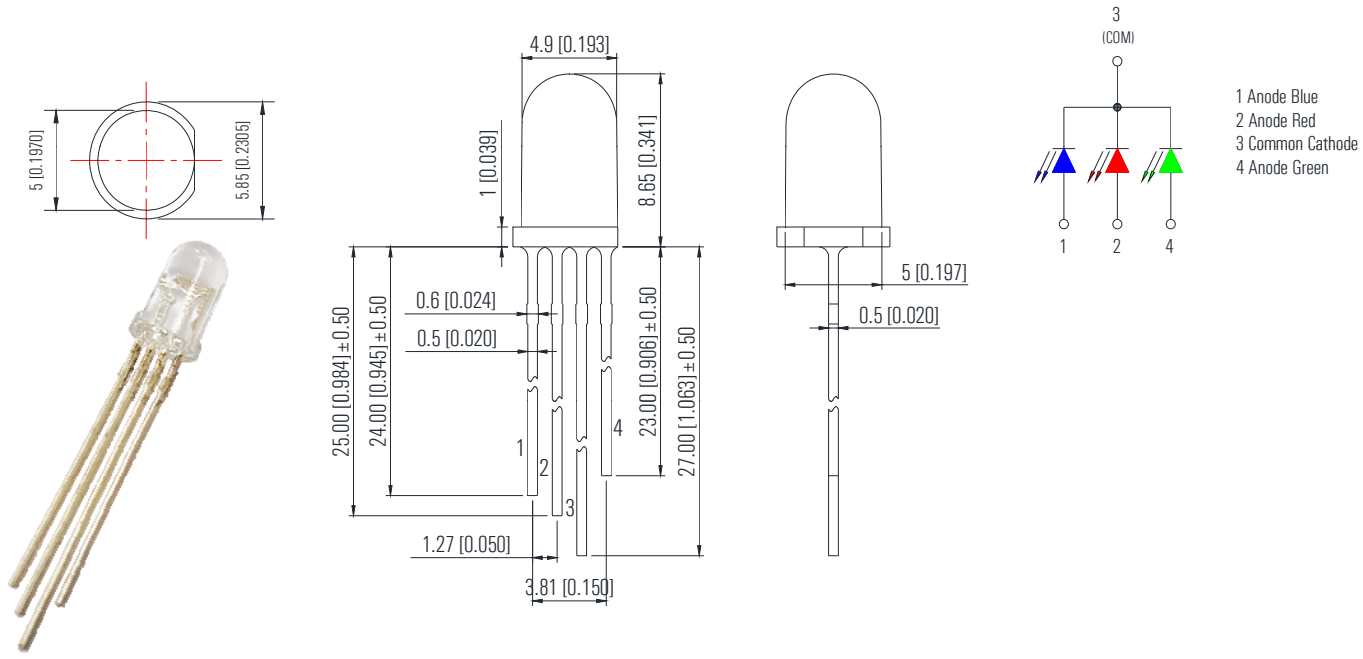

509RGBC2E-002	AlGaInP	Super Bright Red	632	624	Water Clear	2.00	2.40	20	1600	3200	25
	InGaN	Pure Green	520	525		3.20	3.60		2000	4000	
	InGaN	Blue	468	470		3.20	3.60		1000	2000	

5mm Round Multi-Color With Common Anode Type LED

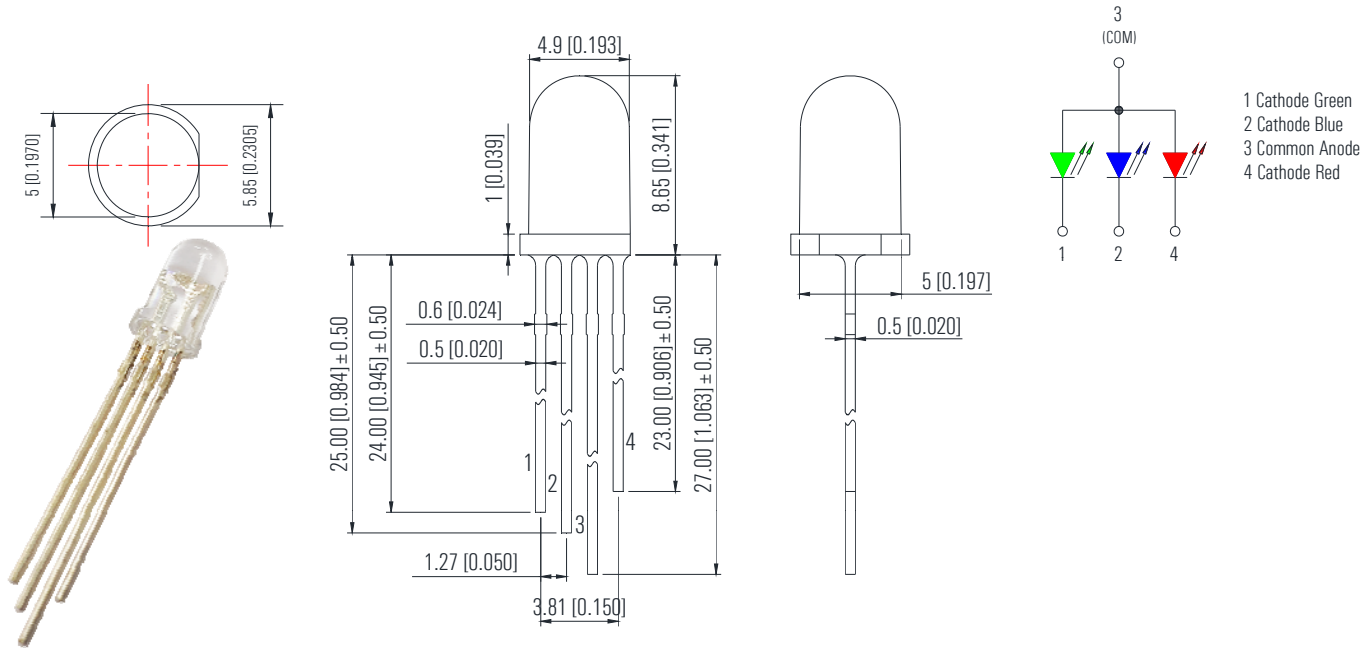

509RGBC2E-004	AlGaInP	Super Bright Red	632	624	Water Clear	2.00	2.40	20	600	1000	25
	InGaN	Pure Green	520	525		3.20	3.60		2000	4000	
	InGaN	Blue	468	470		3.20	3.60		400	700	

Part Number	Chip Material	Emitting Color	λp (nm) / x	λd (nm) / y	Lens Color	VF (V)		IV (mcd)			Viewing Angle
						Typ.	Max.	IF=mA	Min.	Typ.	2θ ½

5mm Round Multi-Color With Common Cathode Type LED

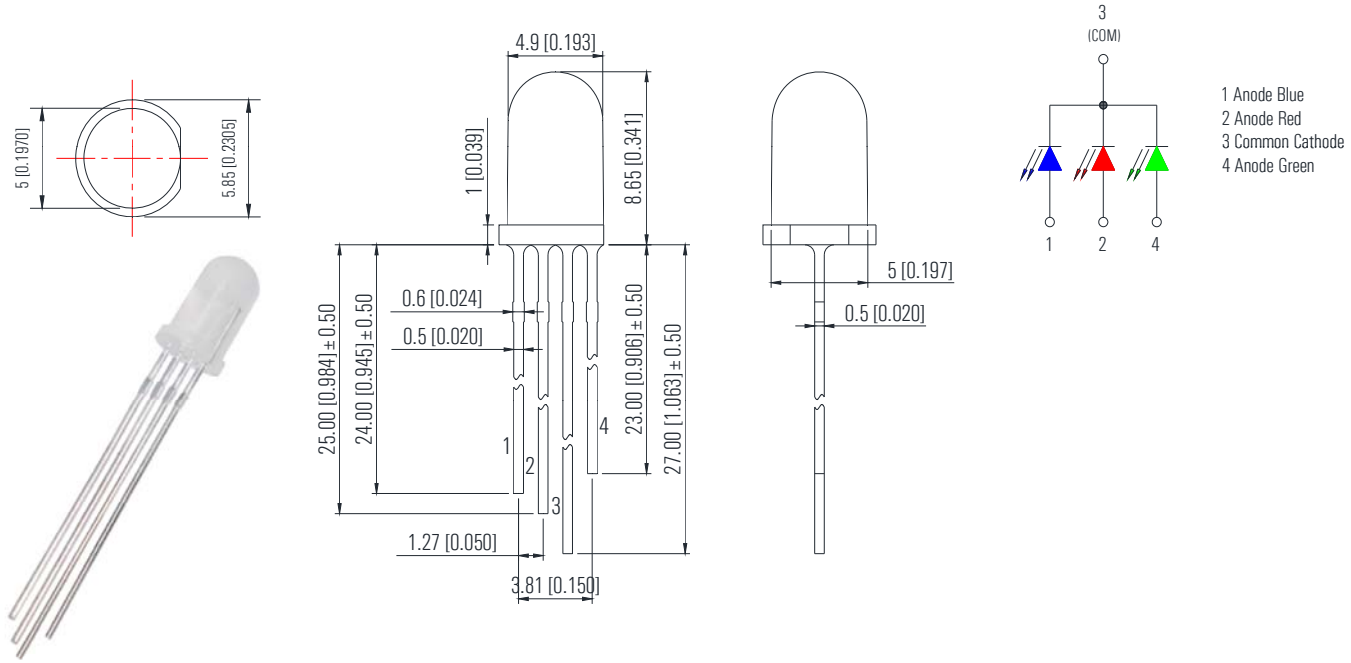

509RGBM2E-002	AlGaInP	Super Bright Red	632	624	White Diffused	2.00	2.40	20	200	500	160
	InGaN	Pure Green	520	525		3.20	3.60		250	1500	
	InGaN	Blue	468	470		3.20	3.60		150	500	

5mm Round Multi-Color With Common Anode Type LED

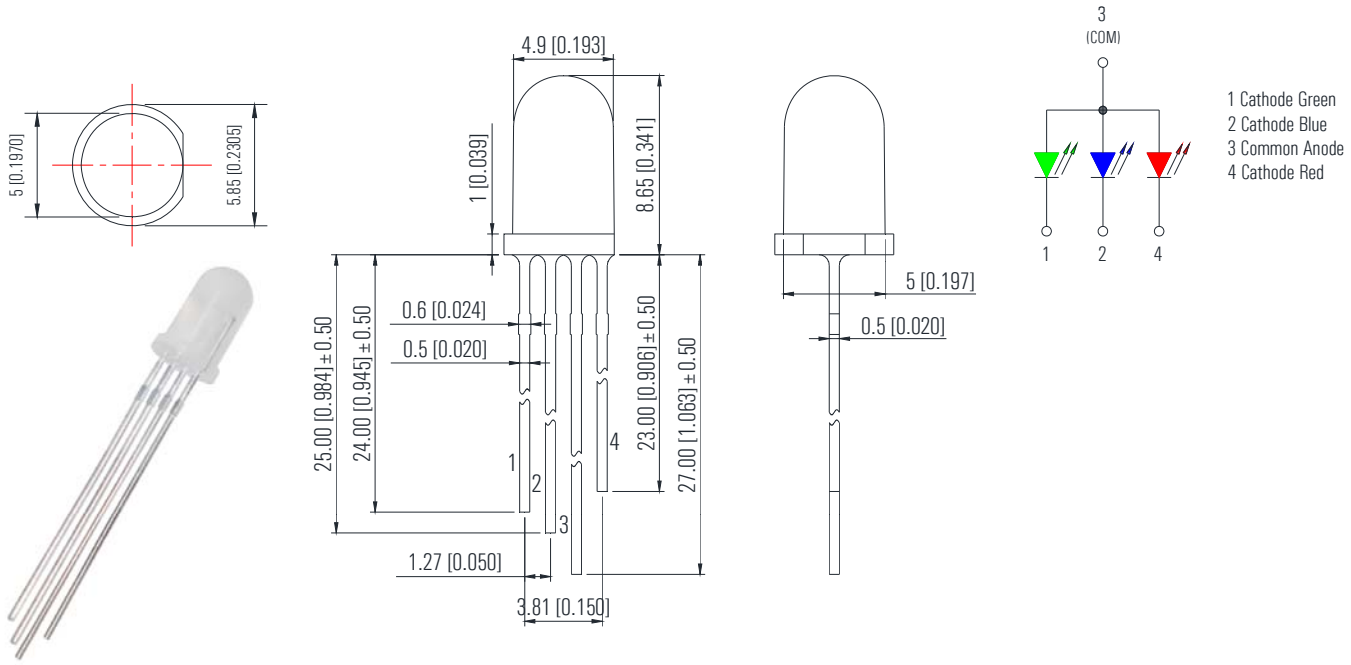

509RGBM2E-004	AlGaInP	Super Bright Red	632	624	White Diffused	2.00	2.40	20	350	600	60
	InGaN	Pure Green	520	525		3.20	3.60		450	1000	
	InGaN	Blue	468	470		3.20	3.60		250	500	

Part Number	Chip Material	Emitting Color	λp (nm) / x	λd (nm) / y	Lens Color	VF (V)		IV (mcd)			Viewing Angle
						Typ.	Max.	IF=mA	Min.	Typ.	2θ ½

2.15mm×2.40mm×1.40mm Subminiature Axial Flat Top View Chip LED

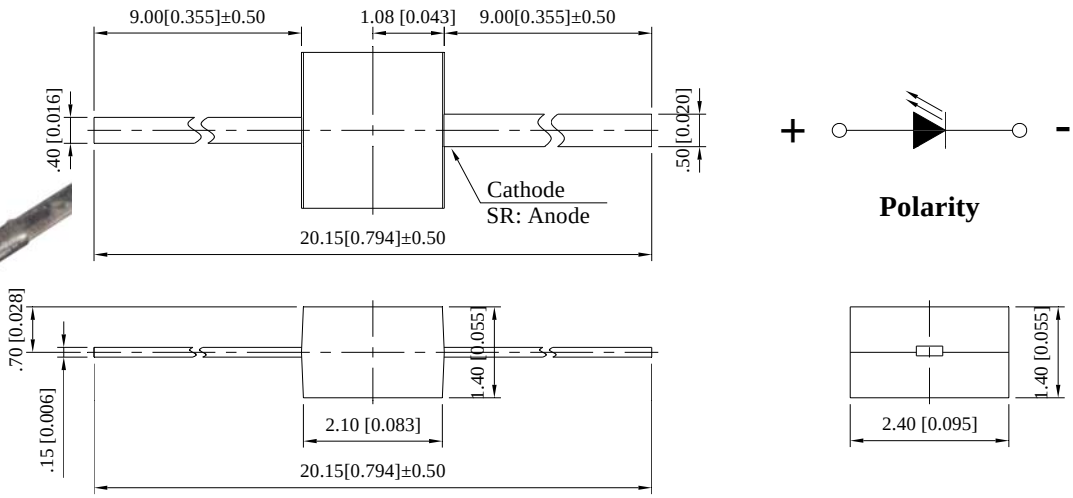

A21VC-2B	AlGaInP	Super Bright Red	632	624	Water Clear	2.00	2.40	20	80	120	140
A21AC-2B	AlGaInP	Super Bright Orange	610	605		2.00	2.40		80	150	
A21YC-2B	AlGaInP	Super Bright Yellow	592	590		2.00	2.40		80	120	
A21GC-2B	AlGaInP	Yellow Green	575	573		2.00	2.40		20	40	
A21PGC-G5-1B	InGaN	Pure Green	520	525		3.20	3.60		100	250	
A21BC-B4-1B	InGaN	Blue	468	470		3.20	3.60		45	80	
A21W-W2-1C	InGaN	Cool White	x=0.31	y=0.32	Yellow Diffused	3.20	3.60		150	300	

2.15mm×2.40mm×1.40mm Subminiature Axial Flat Top View Chip LED

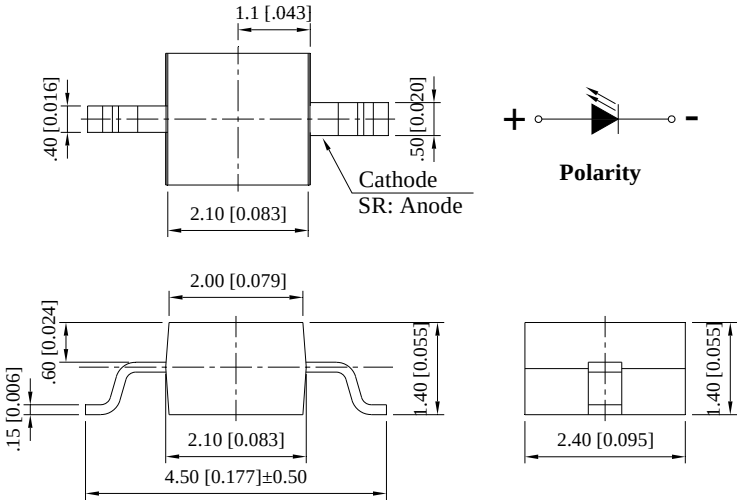

A21VC-2B/TR3	AlGaInP	Super Bright Red	632	624	Water Clear	2.00	2.40	20	80	120	140
A21AC-2B/TR3	AlGaInP	Super Bright Orange	610	605		2.00	2.40		80	150	
A21YC-2B/TR3	AlGaInP	Super Bright Yellow	592	590		2.00	2.40		80	120	
A21GC-2B/TR3	AlGaInP	Yellow Green	575	573		2.00	2.40		20	40	
A21PGC-G5-1B/TR3	InGaN	Pure Green	520	525		3.20	3.60		100	250	
A21BC-B4-1B/TR3	InGaN	Blue	468	470		3.20	3.60		45	80	
A21W-W2-1C/TR3	InGaN	Cool White	x=0.31	y=0.32	Yellow Diffused	3.20	3.60		150	300	

Part Number	Chip Material	Emitting Color	λp (nm) / x	λd (nm) / y	Lens Color	VF (V)		IV (mcd)			Viewing Angle
						Typ.	Max.	IF=mA	Min.	Typ.	2θ ½

2.15mm×2.40mm×1.40mm Subminiature Axial Flat Top View Chip LED

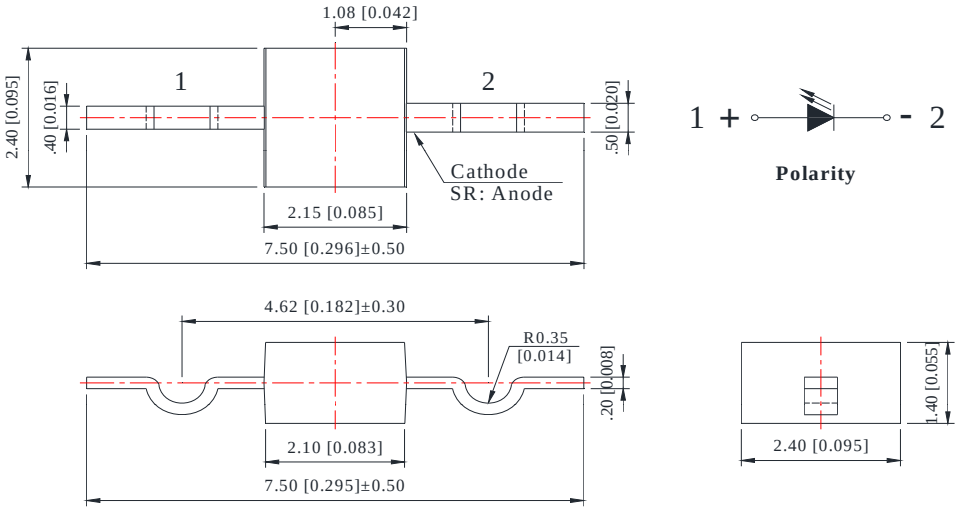

A21VC-2B/TR6	AlGaInP	Super Bright Red	632	624	Water Clear	2.00	2.40	20	80	120	140
A21AC-2B/TR6	AlGaInP	Super Bright Orange	610	605		2.00	2.40		80	150	
A21YC-2B/TR6	AlGaInP	Super Bright Yellow	592	590		2.00	2.40		80	120	
A21GC-2B/TR6	AlGaInP	Yellow Green	575	573		2.00	2.40		20	40	
A21PGC-G5-1B/TR6	InGaN	Pure Green	520	525		3.20	3.60		100	250	
A21BC-B4-1B/TR6	InGaN	Blue	468	470		3.20	3.60		45	80	
A21W-W2-1C/TR6	InGaN	Cool White	x=0.31	y=0.32	Yellow Diffused	3.20	3.60		150	300	

2.15mm×2.40mm×2.75mm Subminiature Axial Chip LED

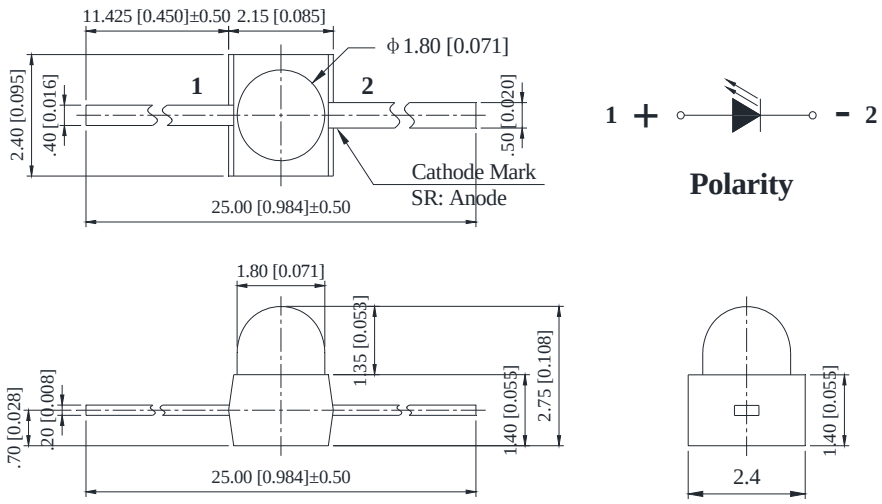

AR180VC-2B	AlGaInP	Super Bright Red	632	624	Water Clear	2.00	2.40	20	1000	2000	25
AR180AC-2B	AlGaInP	Super Bright Orange	610	605		2.00	2.40		800	1800	
AR180YC-2B	AlGaInP	Super Bright Yellow	592	590		2.00	2.40		1000	2000	
AR180GC-2B	AlGaInP	Yellow Green	575	573		2.00	2.40		800	1800	
AR180PGC-G5-1B	InGaN	Pure Green	520	525		3.20	3.60		1500	3000	
AR180BC-B4-1B	InGaN	Blue	468	470		3.20	3.60		500	1000	
AR180W-W2-1C	InGaN	Cool White	x=0.31	y=0.32	Yellow Diffused	3.20	3.60		150	500	160

Part Number	Chip Material	Emitting Color	λp (nm) / x	λd (nm) / y	Lens Color	VF (V)		IV (mcd)			Viewing Angle
						Typ.	Max.	IF=mA	Min.	Typ.	2θ ½

2.15mm×2.40mm×2.75mm Subminiature Axial Chip LED

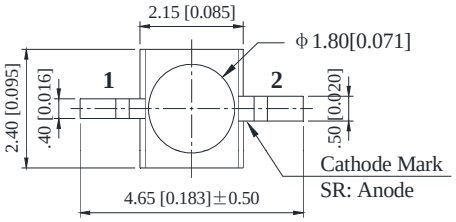

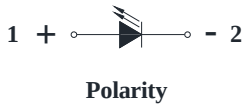

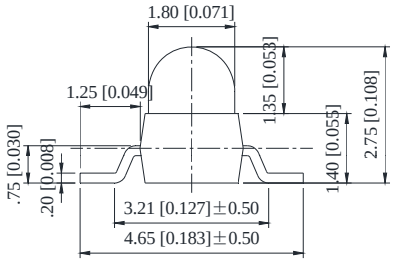

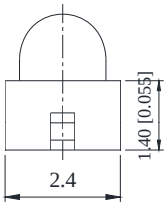

AR180VC-2B/TR2	AlGaInP	Super Bright Red	632	624	Water Clear	2.00	2.40	20	1000	2000	25
AR180AC-2B/TR2	AlGaInP	Super Bright Orange	610	605		2.00	2.40		800	1800	
AR180YC-2B/TR2	AlGaInP	Super Bright Yellow	592	590		2.00	2.40		1000	2000	
AR180GC-2B/TR2	AlGaInP	Yellow Green	575	573		2.00	2.40		800	1800	
AR180PGC-G5-1B/TR2	InGaN	Pure Green	520	525		3.20	3.60		1500	3000	
AR180BC-B4-1B/TR2	InGaN	Blue	468	470		3.20	3.60		500	1000	
AR180W-W2-1C/TR2	InGaN	Cool White	x=0.31	y=0.32	Yellow Diffused	3.20	3.60		150	500	160

2.15mm×2.40mm×2.75mm Subminiature Axial Chip LED

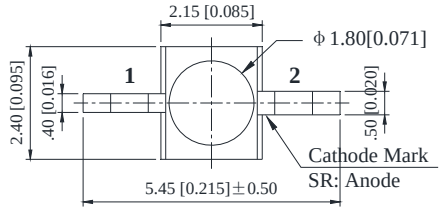

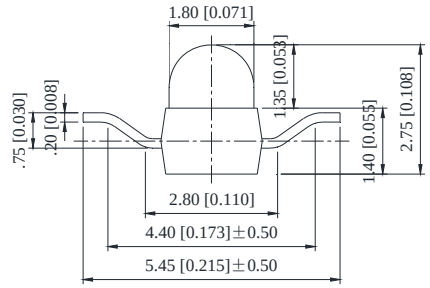

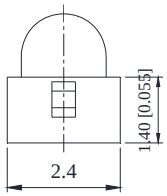

AR180VC-2B/TR5	AlGaInP	Super Bright Red	632	624	Water Clear	2.00	2.40	20	1000	2000	25
AR180AC-2B/TR5	AlGaInP	Super Bright Orange	610	605		2.00	2.40		800	1800	
AR180YC-2B/TR5	AlGaInP	Super Bright Yellow	592	590		2.00	2.40		1000	2000	
AR180GC-2B/TR5	AlGaInP	Yellow Green	575	573		2.00	2.40		800	1800	
AR180PGC-G5-1B/TR5	InGaN	Pure Green	520	525		3.20	3.60		1500	3000	
AR180BC-B4-1B/TR5	InGaN	Blue	468	470		3.20	3.60		500	1000	
AR180W-W2-1C/TR5	InGaN	Cool White	x=0.31	y=0.32	Yellow Diffused	3.20	3.60		150	500	160

Part Number	Chip Material	Emitting Color	λp (nm) / x	λd (nm) / y	Lens Color	VF (V)		IV (mcd)			Viewing Angle
						Typ.	Max.	IF=mA	Min.	Typ.	2θ ½

3mm Circuit Board Indicator / Single Level CBI

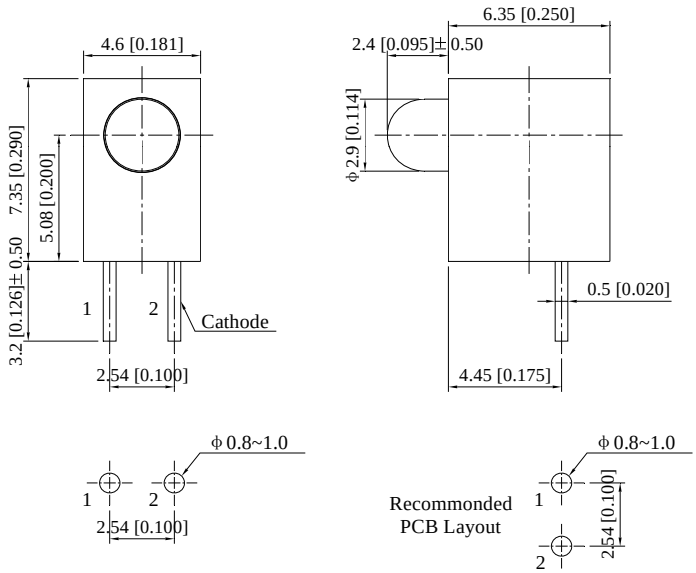

H30C-1VD	AlGaInP	Super Bright Red	632	624	Red Diffused	2.00	2.40	20	160	270	80
H30C-1AD	AlGaInP	Super Bright Orange	610	605	Orange Diffused	2.00	2.40		90	160	
H30C-1YD	AlGaInP	Super Bright Yellow	592	590	Yellow Diffused	2.00	2.40		90	160	
H30C-1GD	AlGaInP/GaAs	Super Yellow Green	573	571	Green Diffused	2.00	2.40		90	160	
H30C-1BD	InGaN	Blue	468	470	Blue Diffused	3.20	3.60		460	780	60

3mm Circuit Board Indicator / Single Level CBI

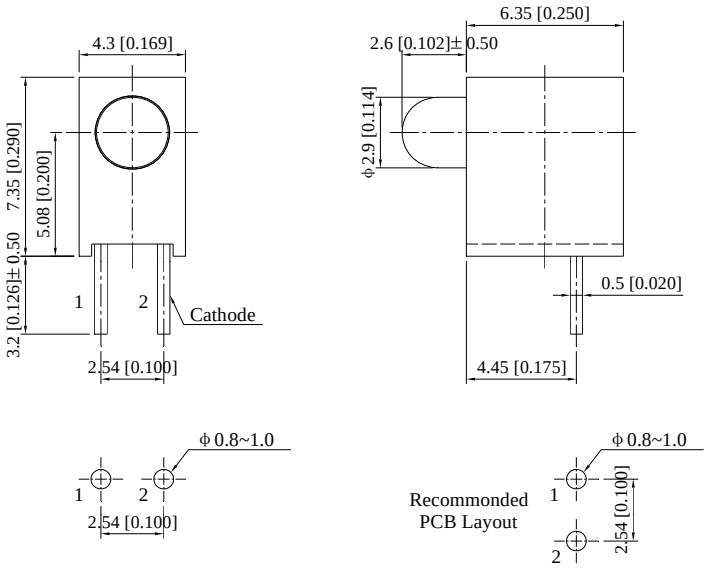

H30E-1VD	AlGaInP	Super Bright Red	632	624	Red Diffused	2.00	2.40	20	160	270	80
H30E-1AD	AlGaInP	Super Bright Orange	610	605	Orange Diffused	2.00	2.40		90	160	
H30E-1YD	AlGaInP	Super Bright Yellow	592	590	Yellow Diffused	2.00	2.40		90	160	
H30E-1GD	AlGaInP/GaAs	Super Yellow Green	573	571	Green Diffused	2.00	2.40		90	160	
H30E-1BD	InGaN	Blue	468	470	Blue Diffused	3.20	3.60		460	780	60

Part Number	Chip Material	Emitting Color	λp (nm) / x	λd (nm) / y	Lens Color	VF (V)		IV (mcd)			Viewing Angle
						Typ.	Max.	IF=mA	Min.	Typ.	2θ ½

5mm Circuit Board Indicator / Single Level CBI

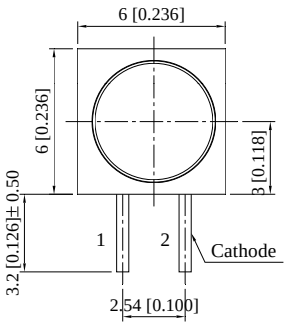

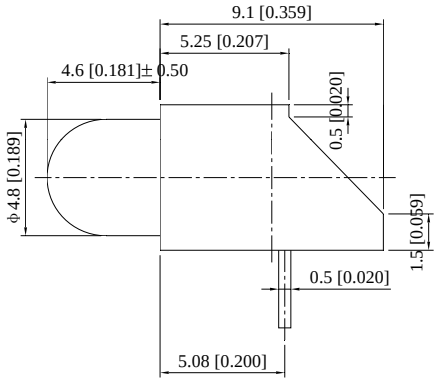

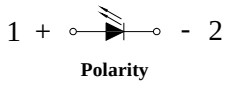

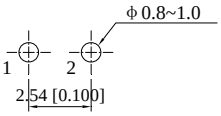

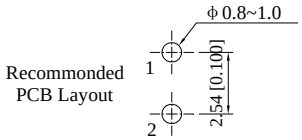

H50C-1VD	AlGaInP	Super Bright Red	632	624	Red Diffused	2.00	2.40	20	160	270	60
H50C-1AD	AlGaInP	Super Bright Orange	610	605	Orange Diffused	2.00	2.40		70	120	
H50C-1YD	AlGaInP	Super Bright Yellow	592	590	Yellow Diffused	2.00	2.40		120	210	
H50C-1GD	AlGaInP/GaAs	Super Yellow Green	573	571	Green Diffused	2.00	2.40		20	45	
H50C-1BD	InGaN	Blue	468	470	Blue Diffused	3.20	3.60		350	600	

3mm Circuit Board Indicator / Bi-Level CBI

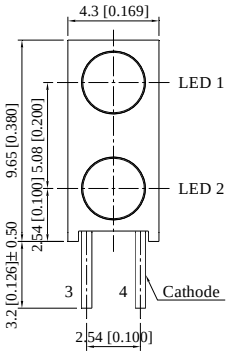

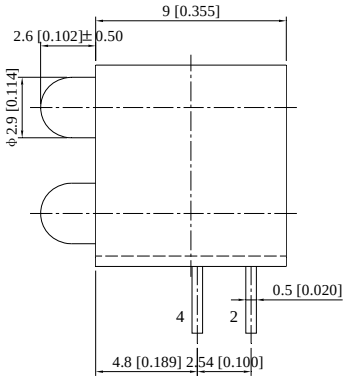

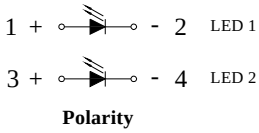

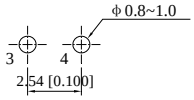

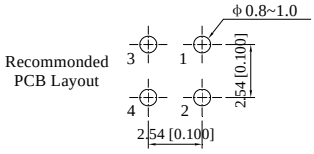

H30F-2VD-RS	AlGaInP	Super Bright Red	632	624	Red Diffused	2.00	2.40	20	160	270	80
H30F-2AD-RS	AlGaInP	Super Bright Orange	610	605	Orange Diffused	2.00	2.40		90	160	
H30F-2YD-RS	AlGaInP	Super Bright Yellow	592	590	Yellow Diffused	2.00	2.40		90	160	
H30F-2GD-RS	AlGaInP/GaAs	Super Yellow Green	573	571	Green Diffused	2.00	2.40		90	160	
H30F-2BD-RS	InGaN	Blue	468	470	Blue Diffused	3.20	3.60		460	780	60

Part Number	Chip Material	Emitting Color	λp (nm) / x	λd (nm) / y	Lens Color	VF (V)		IV (mcd)			Viewing Angle
						Typ.	Max.	IF=mA	Min.	Typ.	2θ ½

5mm Circuit Board Indicator / Bi-Level CBI

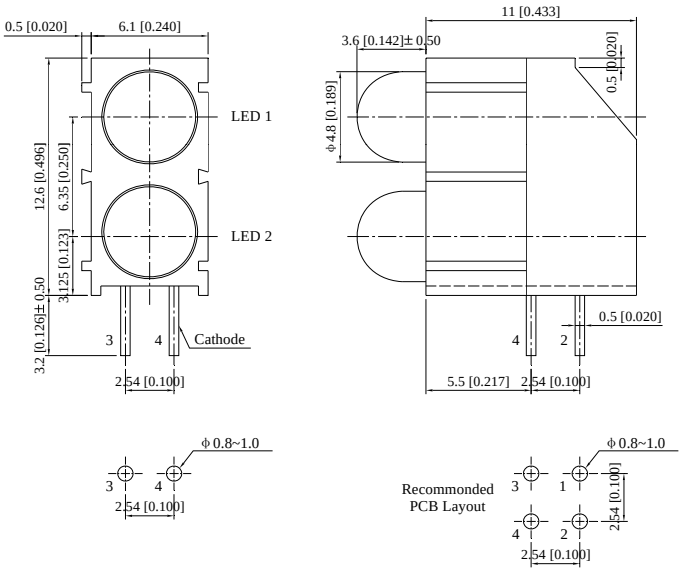

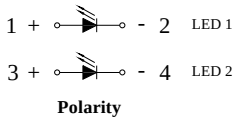

H50F-2VD	AlGaInP	Super Bright Red	632	624	Red Diffused	2.00	2.40	20	210	350	60
H50F-2AD	AlGaInP	Super Bright Orange	610	605	Orange Diffused	2.00	2.40		90	160	
H50F-2YD	AlGaInP	Super Bright Yellow	592	590	Yellow Diffused	2.00	2.40		210	350	
H50F-2GD	AlGaInP/GaAs	Super Yellow Green	573	571	Green Diffused	2.00	2.40		70	120	
H50F-2BD	InGaN	Blue	468	470	Blue Diffused	3.20	3.60		350	600	

3mm Circuit Board Indicator / Tri-Level CBI

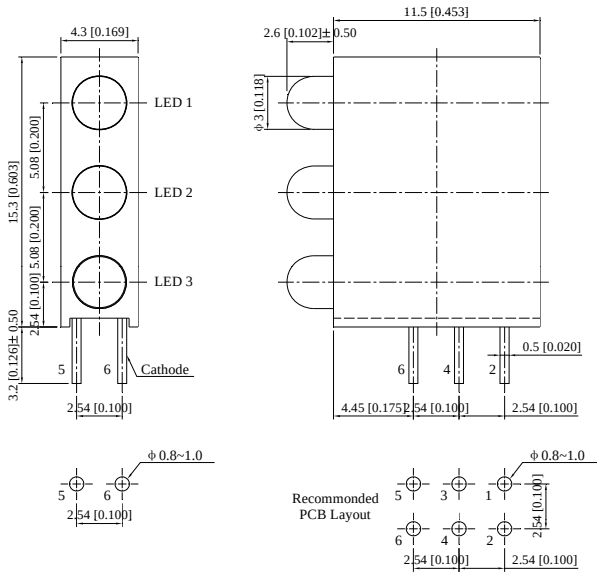

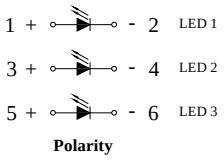

H30D-3VD-RS	AlGaInP	Super Bright Red	632	624	Red Diffused	2.00	2.40	20	160	270	80
H30D-3AD-RS	AlGaInP	Super Bright Orange	610	605	Orange Diffused	2.00	2.40		90	160	
H30D-3YD-RS	AlGaInP	Super Bright Yellow	592	590	Yellow Diffused	2.00	2.40		90	160	
H30D-3GD-RS	AlGaInP/GaAs	Super Yellow Green	573	571	Green Diffused	2.00	2.40		90	160	
H30D-3BD-RS	InGaN	Blue	468	470	Blue Diffused	3.20	3.60		460	780	60

Part Number	Chip Material	Emitting Color	λp (nm) / x	λd (nm) / y	Lens Color	VF (V)		IV (mcd)			Viewing Angle
						Typ.	Max.	IF=mA	Min.	Typ.	2θ ½

3mm Circuit Board Indicator / Quad-Level CBI

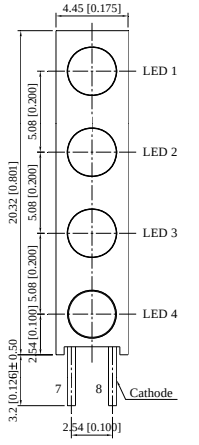

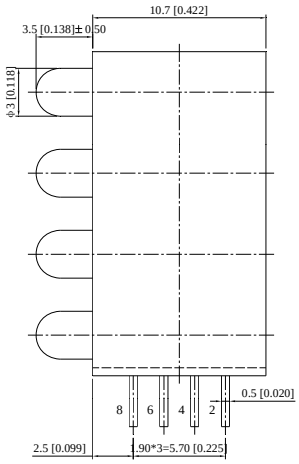

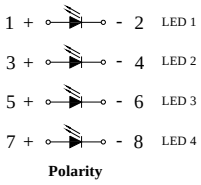

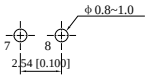

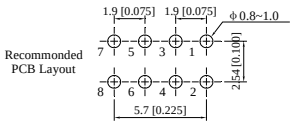

H30D-4VD-RS	AlGaInP	Super Bright Red	632	624	Red Diffused	2.00	2.40	20	160	270	80
H30D-4AD-RS	AlGaInP	Super Bright Orange	610	605	Orange Diffused	2.00	2.40		90	160	
H30D-4YD-RS	AlGaInP	Super Bright Yellow	592	590	Yellow Diffused	2.00	2.40		90	160	
H30D-4GD-RS	AlGaInP/GaAs	Super Yellow Green	573	571	Green Diffused	2.00	2.40		90	160	
H30D-4BD-RS	InGaN	Blue	468	470	Blue Diffused	3.20	3.60		460	780	60

2×3mm Rectangular LED Circuit Board Indicator / Quad-Level Right Angle CBI

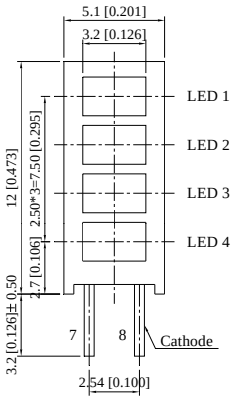

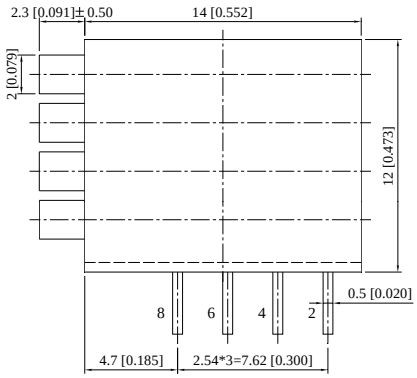

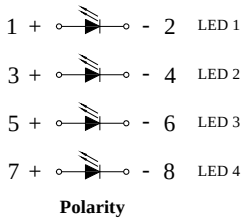

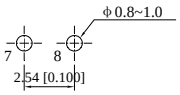

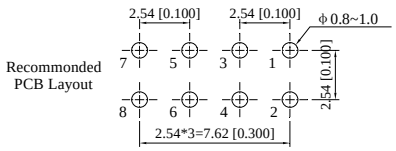

H23K-4VD	AlGaInP	Super Bright Red	632	624	Red Diffused	2.00	2.40	20	70	120	130
H23K-4AD	AlGaInP	Super Bright Orange	610	605	Orange Diffused	2.00	2.40		45	90	
H23K-4YD	AlGaInP	Super Bright Yellow	592	590	Yellow Diffused	2.00	2.40		30	70	
H23K-4GD	AlGaInP/GaAs	Super Yellow Green	573	571	Green Diffused	2.00	2.40		20	45	

Part Number	Chip Material	Emitting Color	λp (nm) / x	λd (nm) / y	Lens Color	VF (V)		IV (mcd)			Viewing Angle
						Typ.	Max.	IF=mA	Min.	Typ.	2θ ½

2×5mm Rectangular LED Circuit Board Indicator / Tri-Block CBI

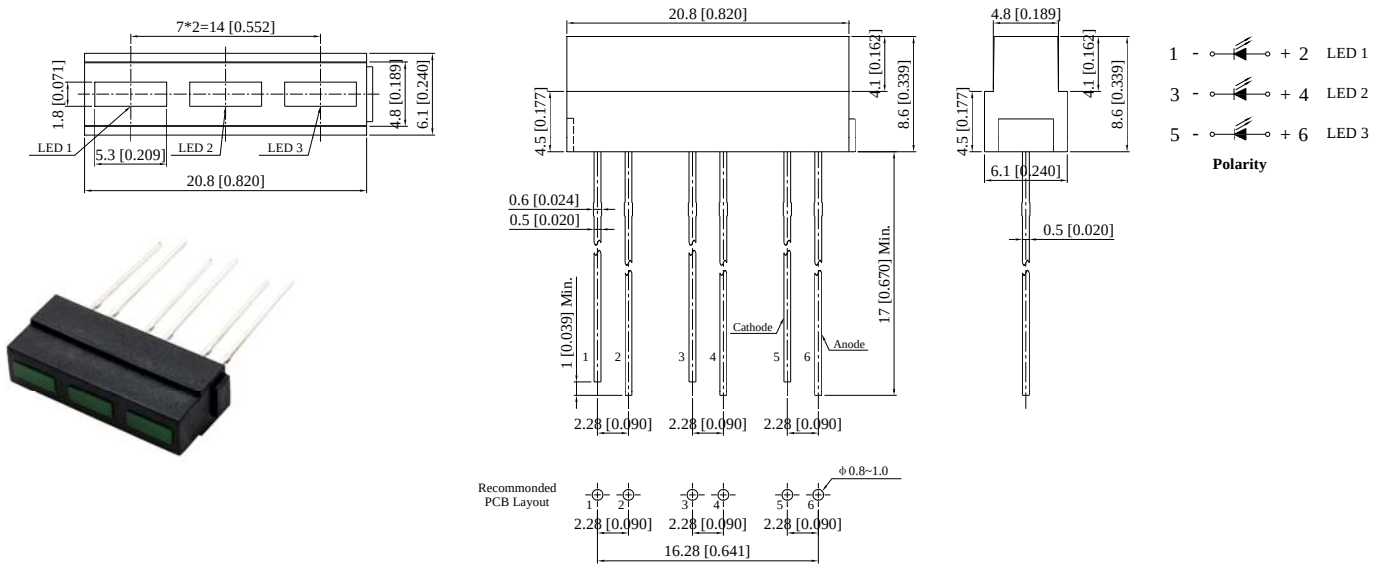

H23CB-3VD	AlGaInP	Super Bright Red	632	624	Red Diffused	2.00	2.40	20	9	20	180
H23CB-3AD	AlGaInP	Super Bright Orange	610	605	Orange Diffused	2.00	2.40		13	30	
H23CB-3YD	AlGaInP	Super Bright Yellow	592	590	Yellow Diffused	2.00	2.40		9	20	
H23CB-3GD	AlGaInP/GaAs	Super Yellow Green	573	571	Green Diffused	2.00	2.40		1	3	

2×5mm Rectangular LED Circuit Board Indicator / Multiple Block CBI

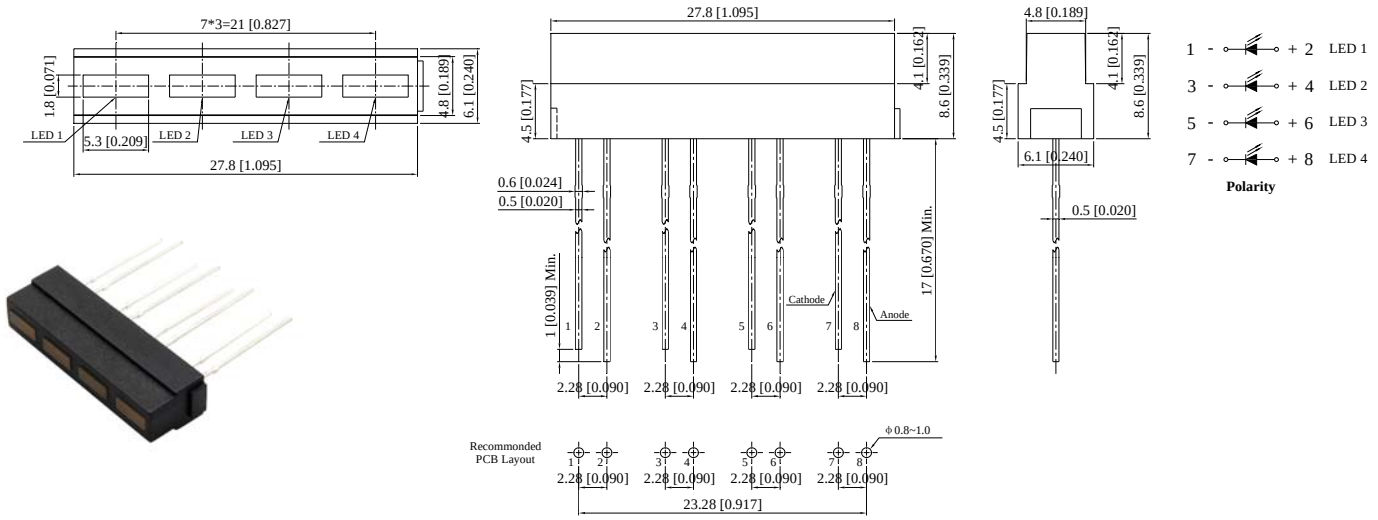

H23CB-4VD	AlGaInP	Super Bright Red	632	624	Red Diffused	2.00	2.40	20	9	20	180
H23CB-4AD	AlGaInP	Super Bright Orange	610	605	Orange Diffused	2.00	2.40		13	30	
H23CB-4YD	AlGaInP	Super Bright Yellow	592	590	Yellow Diffused	2.00	2.40		9	20	
H23CB-4GD	AlGaInP/GaAs	Super Yellow Green	573	571	Green Diffused	2.00	2.40		1	3	

Part Number	Chip Material	Emitting Color	λp (nm) / x	λd (nm) / y	Lens Color	VF (V)		IV (mcd)			Viewing Angle
						Typ.	Max.	IF=mA	Min.	Typ.	2θ ½

2×5mm Rectangular LED Circuit Board Indicator / Multiple Block CBI

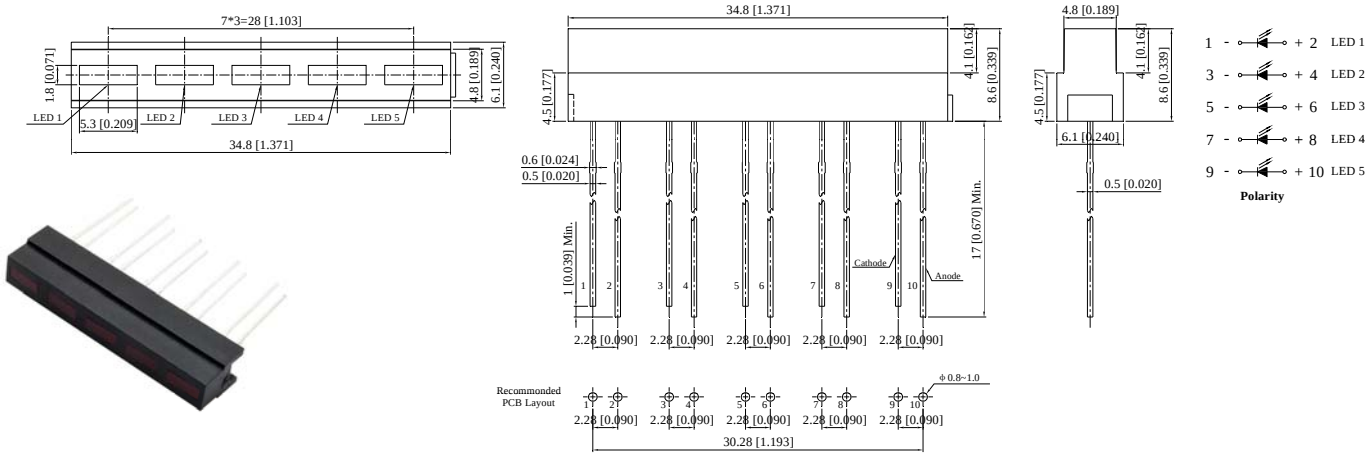

H23CB-5VD	AlGaInP	Super Bright Red	632	624	Red Diffused	2.00	2.40	20	9	20	180
H23CB-5AD	AlGaInP	Super Bright Orange	610	605	Orange Diffused	2.00	2.40		13	30	
H23CB-5YD	AlGaInP	Super Bright Yellow	592	590	Yellow Diffused	2.00	2.40		9	20	
H23CB-5GD	AlGaInP/GaAs	Super Yellow Green	573	571	Green Diffused	2.00	2.40		1	3	

3mm Bi-Color Circuit Board Indicator / Single Level CBI

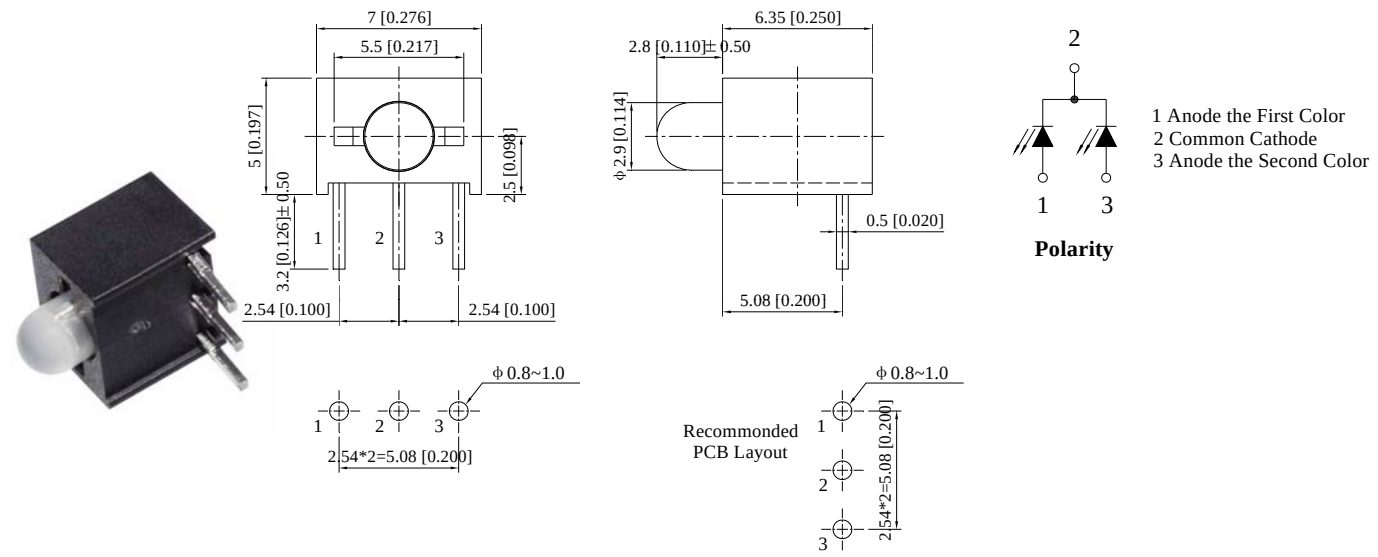

H30WD-1VGM	AlGaInP	Super Bright Red	632	624	White Diffused	2.00	2.40	20	110	260	80
	AlGaInP/GaAs	Super Yellow Green	573	571		2.00	2.40		45	110	
H30WD-1VYM	AlGaInP	Super Bright Red	632	624		2.00	2.40		70	170	
	AlGaInP	Super Bright Yellow	592	590		2.00	2.40		45	110	
H30WD-1GYM	AlGaInP/GaAs	Super Yellow Green	573	571		2.00	2.40		30	70	
	AlGaInP	Super Bright Yellow	592	590		2.00	2.40		70	170	

Luckylight

Part Number	Chip Material	Emitting Color	λp (nm) / x	λd (nm) / y	Lens Color	VF (V)		IV (mcd)			Viewing Angle
						Typ.	Max.	IF=mA	Min.	Typ.	2θ ½

5mm Bi-Color Circuit Board Indicator / Single Level CBI

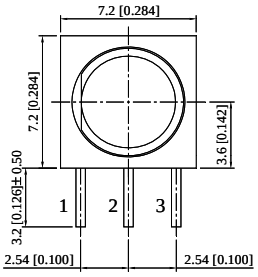

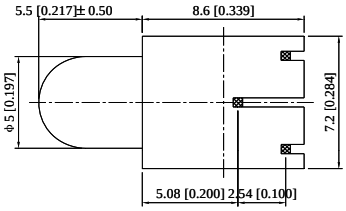

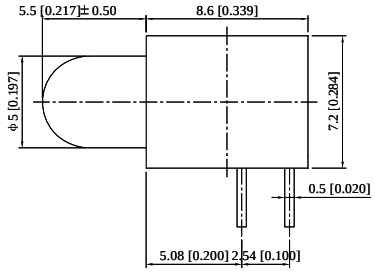

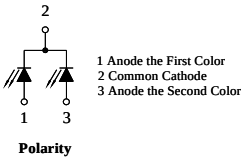

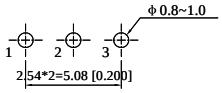

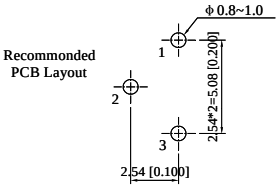

H50E-1VGM	AlGaInP	Super Bright Red	632	624	White Diffused	2.00	2.40	20	110	260	60
	AlGaInP/GaAs	Super Yellow Green	573	571		2.00	2.40		30	70	
H50E-1VYM	AlGaInP	Super Bright Red	632	624		2.00	2.40		110	260	
	AlGaInP	Super Bright Yellow	592	590		2.00	2.40		110	260	
H50E-1GYM	AlGaInP/GaAs	Super Yellow Green	573	571		2.00	2.40		45	110	
	AlGaInP	Super Bright Yellow	592	590		2.00	2.40		170	390	

1. All dimensions are in millimeters (inches).
2. Tolerance is ±0.25mm (.010") unless otherwise noted.
3. Specifications are subject to change without notice.

Part Number	Chip Material	Emitting Color	λp (nm) / x	λd (nm) / y	Lens Color	VF (V)		ΦV (lm)			Viewing Angle
						Typ.	Max.	IF=mA	Min.	Typ.	2θ ½

EMC Top View 1W High Power LED

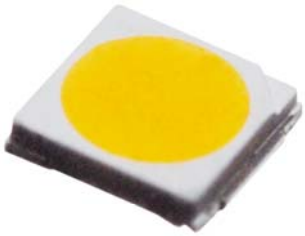

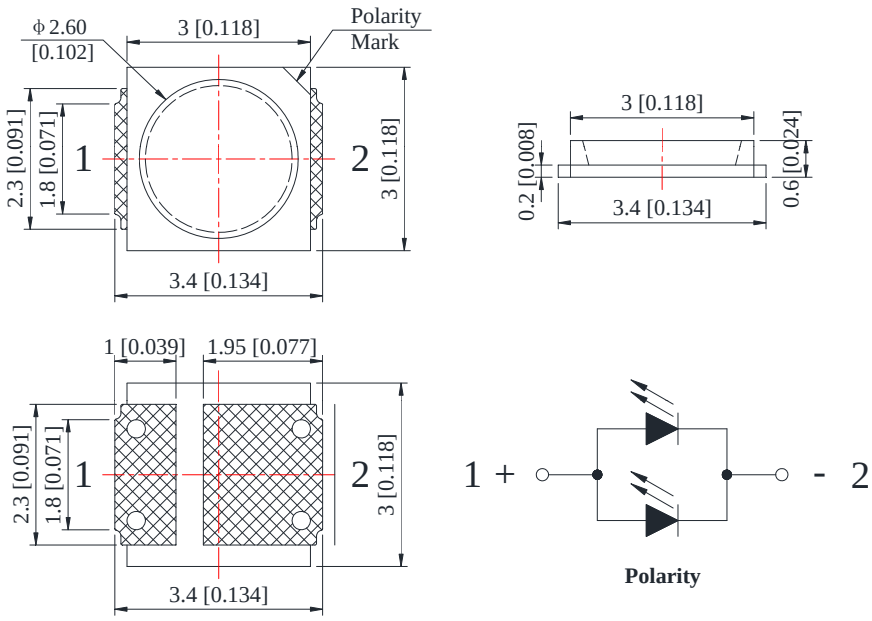

R3030EW-W2H-Q100-RA80	InGaN	Cool White	x=0.31	y=0.32	Yellow Diffused	3.20	3.80	350	100	120	120
R3030EW-W5H-Q100-RA80	InGaN	Neutral White	x=0.35	y=0.36		3.20	3.80		100	120	
R3030EW-W6H-Q100-RA80	InGaN	Warm White	x=0.43	y=0.40		3.20	3.80		100	120	

1W, 3W High Power LED

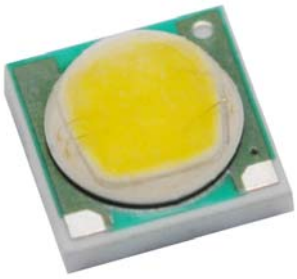

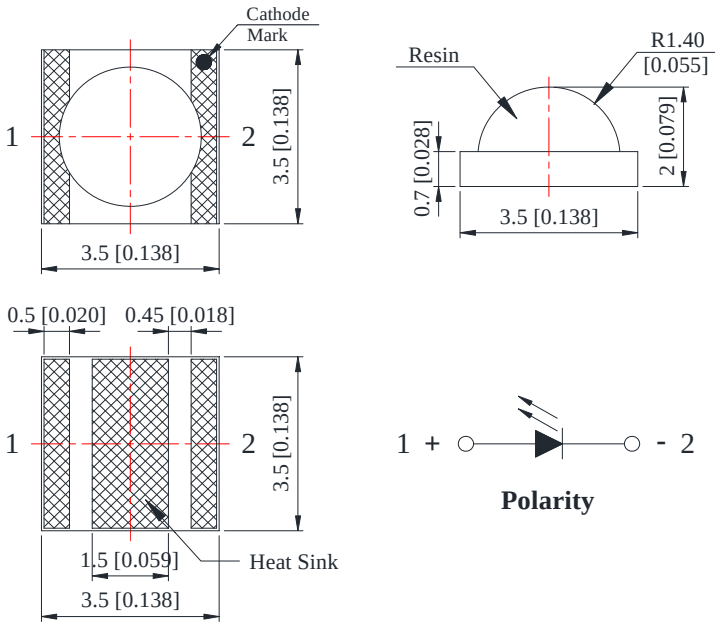

C3535W-W2H-Q100	InGaN	Cool White	x=0.31	y=0.32	Yellow Diffused	3.20	3.80	350	100	130	120
								700	200	230	
C3535W-W5H-Q100	InGaN	Neutral White	x=0.37	y=0.37		3.20	3.80	350	100	125	
								700	200	220	
C3535W-W6H-Q100	InGaN	Warm White	x=0.43	y=0.40		3.20	3.80	350	100	120	
								700	200	220	

Part Number	Chip Material	Emitting Color	λp (nm) / x	λd (nm) / y	Lens Color	VF (V)		ΦV (lm)			Viewing Angle
						Typ.	Max.	IF=mA	Min.	Typ.	2θ ½

4W High Power Flash LED

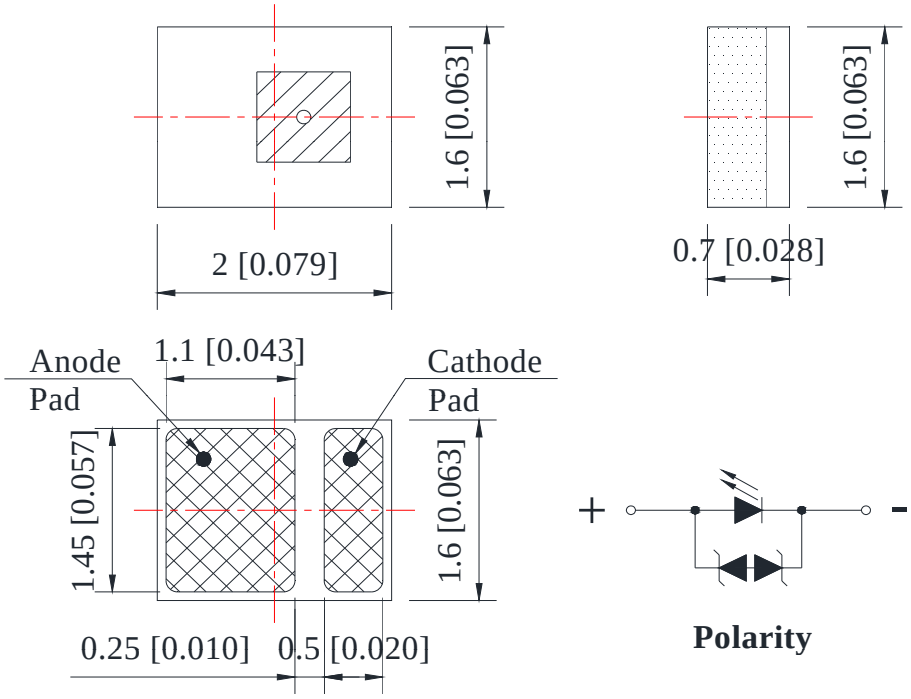

R2016SW-W2H-Q220-D	InGaN	Pure White	x=0.31	y=0.32	Yellow Diffused	3.40	3.80	1000	220	240	120

PLCC-2 Top View 0.2W Mid-power LED

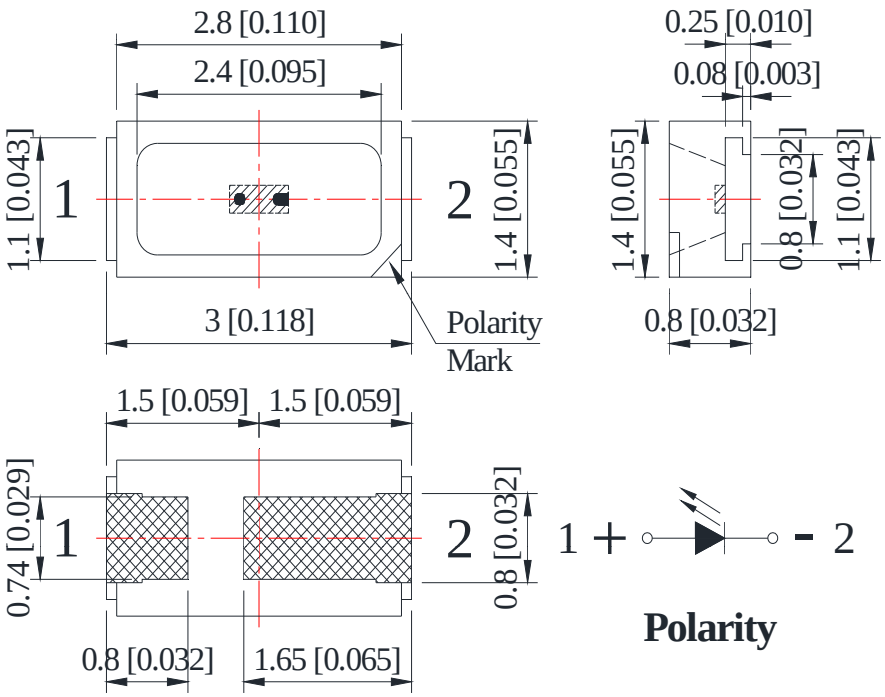

R3014W-W2M-Q10	InGaN	Cool White	x=0.31	y=0.32		3.20	3.60		10.00	12.50	
R3014W-W5M-Q10	InGaN	Neutral White	x=0.35	y=0.36	Yellow Diffused	3.20	3.60	30	10.00	12.00	120
R3014W-W6M-Q10	InGaN	Warm White	x=0.43	y=0.40		3.20	3.60		10.00	12.00	

Part Number	Chip Material	Emitting Color	λp (nm) / x	λd (nm) / y	Lens Color	VF (V)		ΦV (lm)			Viewing Angle
						Typ.	Max.	IF=mA	Min.	Typ.	2θ ½

3.50mm×2.80mm×0.80mm PLCC-2 Top View 0.2W Mid-power LED

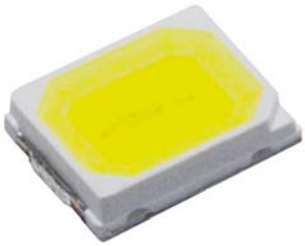

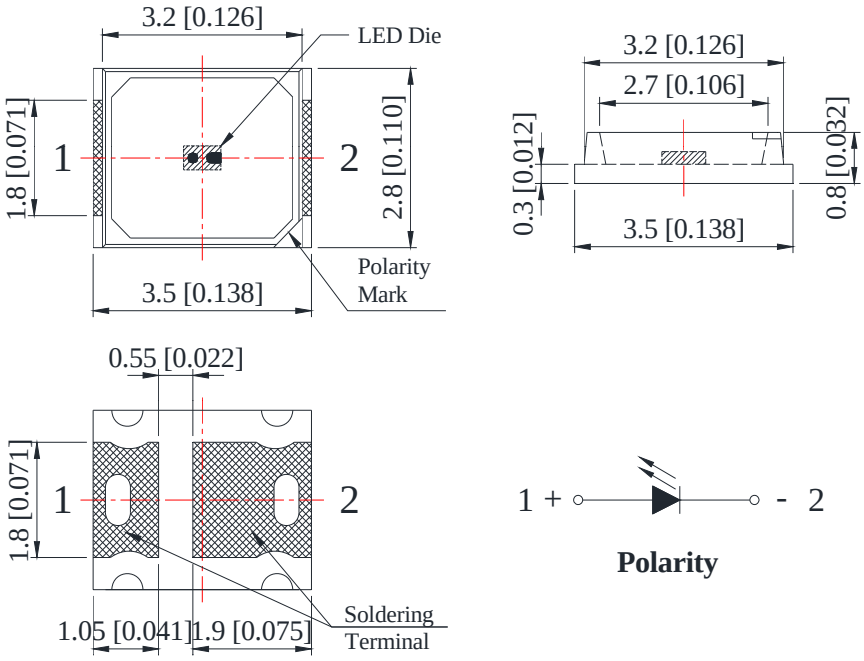

R2835W-W2M-Q20	InGaN	Cool White	x=0.32	y=0.33	Yellow Diffused	3.20	3.60	60	20	24	120
R2835W-W5M-Q20	InGaN	Neutral White	x=0.37	y=0.37		3.20	3.60		20	24	
R2835W-W6M-Q20	InGaN	Warm White	x=0.43	y=0.40		3.20	3.60		20	23	

EMC Top View 0.5W Mid-power LED

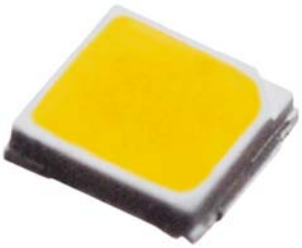

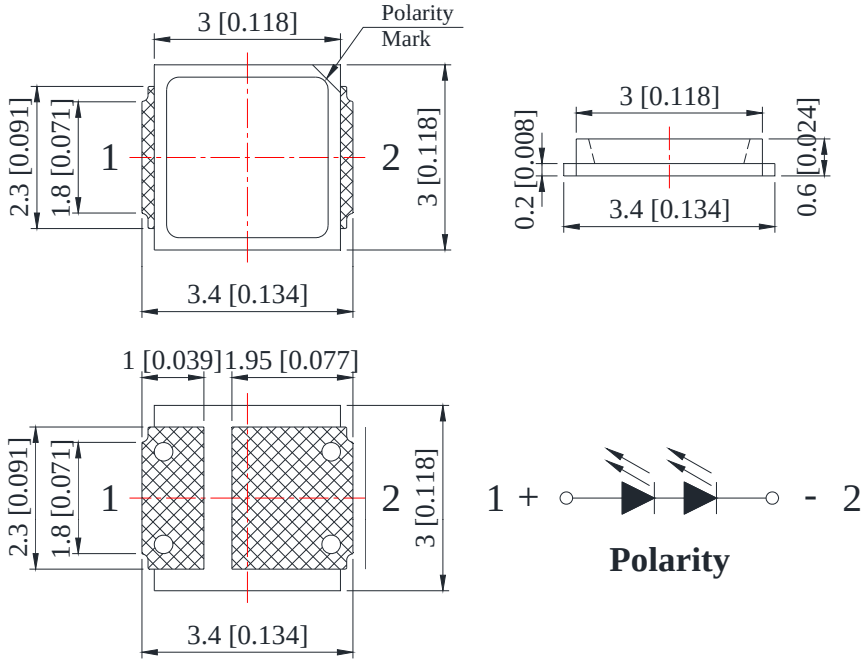

R3030EW-W2H-Q100-6V-F	InGaN	Cool White	x=0.31	y=0.32	Yellow Diffused	6.00	6.80	150	100	120	120
R3030EW-W5H-Q100-6V-F	InGaN	Neutral White	x=0.35	y=0.36		6.00	6.80		100	120	
R3030EW-W6H-Q100-6V-F	InGaN	Warm White	x=0.43	y=0.40		6.00	6.80		100	120	

Part Number	Chip Material	Emitting Color	λp (nm) / x	λd (nm) / y	Lens Color	VF (V)		ΦV (lm)			Viewing Angle
						Typ.	Max.	IF=mA	Min.	Typ.	2θ ½

PLCC-2 Top View 0.5W Mid-power LED

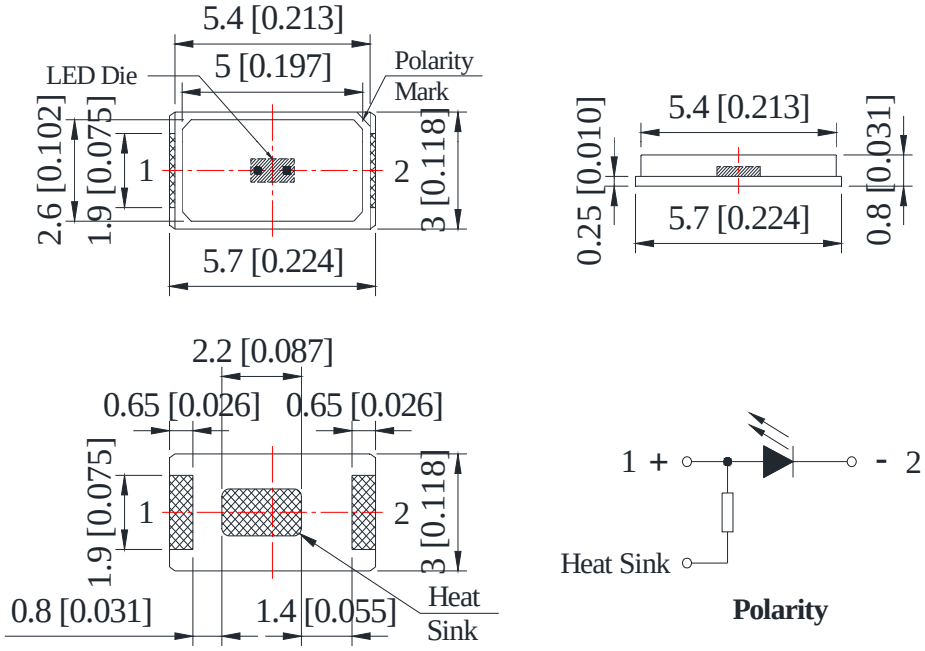

R5730W-W2H-Q50	InGaN	Cool White	x=0.31	y=0.32	Yellow Diffused	3.20	3.60	150	50	60	120
R5730W-W5H-Q50	InGaN	Neutral White	x=0.37	y=0.37		3.20	3.60		50	60	
R5730W-W6H-Q50	InGaN	Warm White	x=0.43	y=0.40		3.20	3.60		50	60	

PLCC-6 Top View 0.5W Mid-power LED

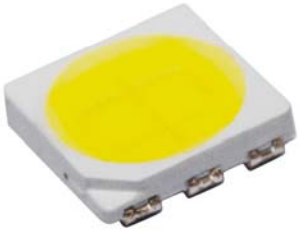

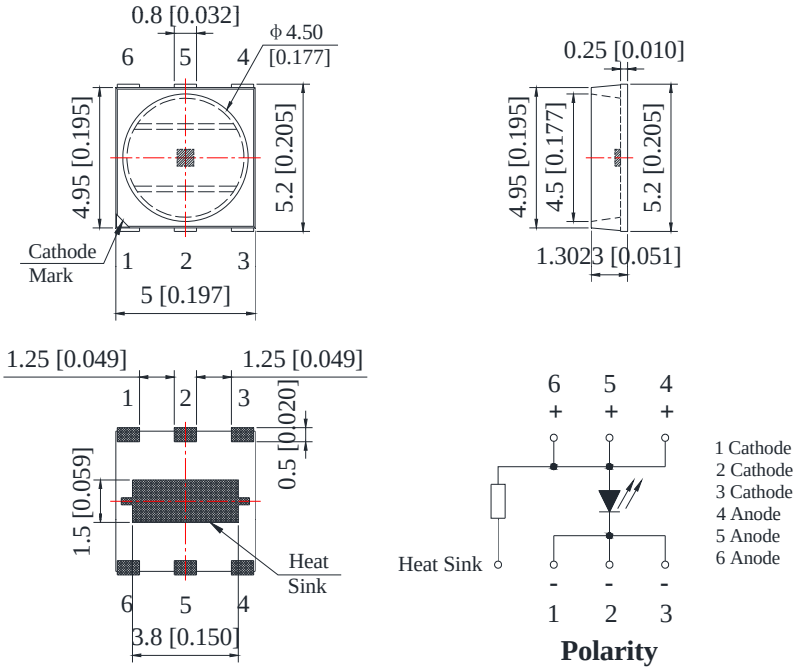

R5050W-W2H-Q50	InGaN	Cool White	x=0.31	y=0.32	Yellow Diffused	3.20	3.60	150	50	60	120
R5050W-W5H-Q50	InGaN	Neutral White	x=0.37	y=0.37		3.20	3.60		50	60	
R5050W-W6H-Q45	InGaN	Warm White	x=0.43	y=0.40		3.20	3.60		45	60	

Part Number	Chip Material	Emitting Color	λp (nm) / x	λd (nm) / y	Lens Color	VF (V)		ΦV (lm)			Viewing Angle
						Typ.	Max.	IF=mA	Min.	Typ.	2θ ½

3.50mm×2.80mm×0.80mm PLCC-2 Top View 0.2W Mid-power LED

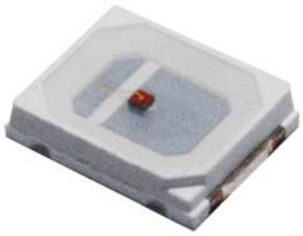

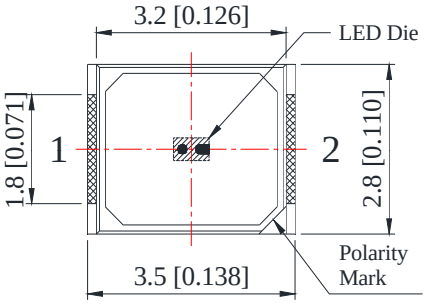

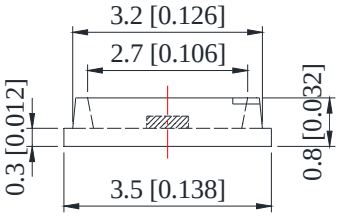

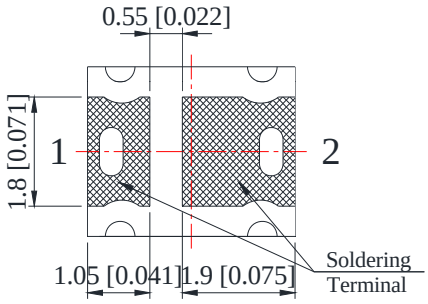

Polarity

R2835FRC-02W	GaP	Far Red	730	/	Water Clear	2.10	2.40	60	10mW	30mW	120
R2835RC-4C	GaP	Plant Red	670	660		2.10	2.40		35mW	55mW	
R2835BC-B2M-M10	InGaN	Blue	450	455		3.20	3.60		1000	1500	
R2835UVC-Q8M	InGaN	UV	415	440		3.20	3.60		50	100	

3.50mm×2.80mm×1.85mm PLCC-2 Top View 0.2W Mid-power LED

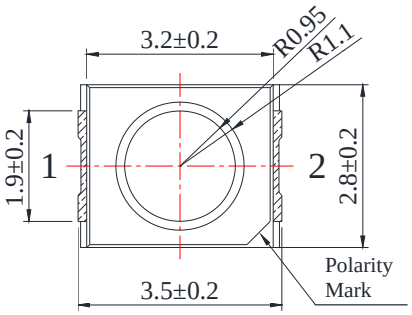

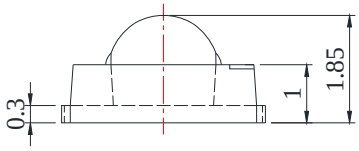

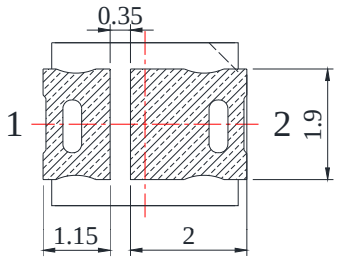

Polarity

RT2835VC-S5	AlGaInP	Deep Red	660	640	Water Clear	2.10	2.40	60	1500	2000	60
									5 lm	8 lm	
RT2835YC-S5	AlGaInP	Super Bright Yellow	592	590		2.10	2.40		1500	2000	
									5 lm	8 lm	
RT2835PGC-G5-S15	InGaN	Pure Green	520	525		3.20	3.60		4500	5500	
									15 lm	18 lm	
RT2835BC-B4-S3	InGaN	Blue	462	465		3.20	3.60		1000	1500	
									3 lm	5 lm	

Part Number	Chip Material	Emitting Color	λp (nm) / x	λd (nm) / y	Lens Color	VF (V)		ΦV (lm)			Viewing Angle
						Typ.	Max.	IF=mA	Min.	Typ.	2θ ½

EMC Top View 1W High Power LED

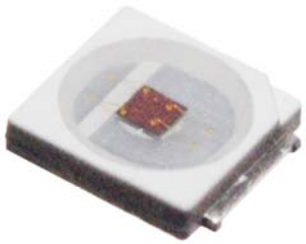

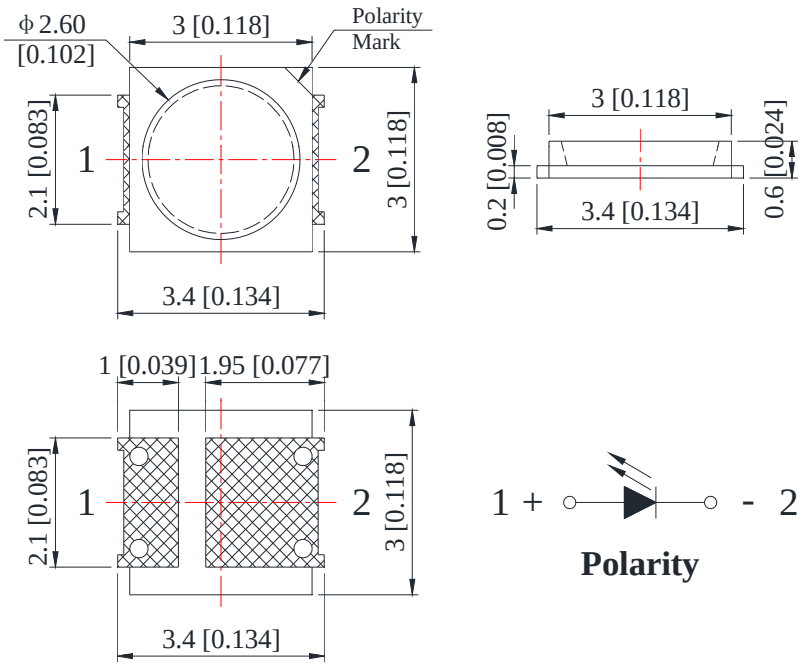

R3030ERC-1W	AlGaInP	Deep Red	660	640	Water Clear	2.10	2.40	350	10	15	120
R3030EBC-B2H-1W	InGaN	Blue	450	455		3.20	3.80		15	20	

1W High Power LED

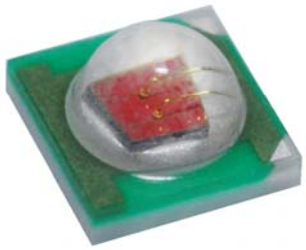

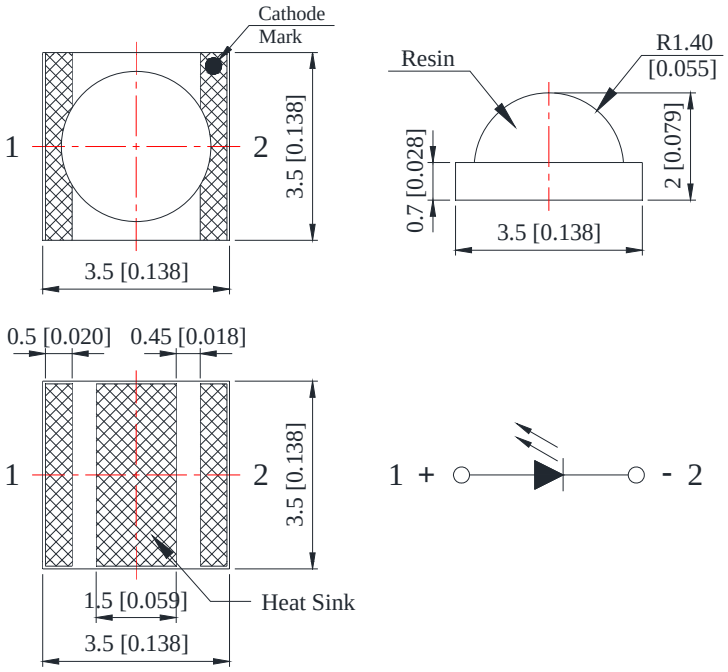

C3535VC-H40	AlGaInP	Super Bright Red	632	624	Water Clear	2.20	2.60	350	40	50	120
C3535YC-H40	AlGaInP	Super Bright Yellow	592	590		2.20	2.60		40	50	
C3535PGC-G5H-Q65	InGaN	Pure Green	520	525		3.20	3.60		65	85	
C3535BC-B4H-Q15	InGaN	Blue	468	470		3.20	3.60		15	25	
C3535UVC-Q5	InGaN	UV	395	425		3.40	3.80		335	500	

Part Number	Chip Material	Emitting Color	λp (nm) / x	λd (nm) / y	Lens Color	VF (V)		ΦV (lm)			Viewing Angle
						Typ.	Max.	IF=mA	Min.	Typ.	2θ ½

3.00mm×3.00mm×0.65mm PLCC-6 Top View 1.5W Mid-power Multi-color LED

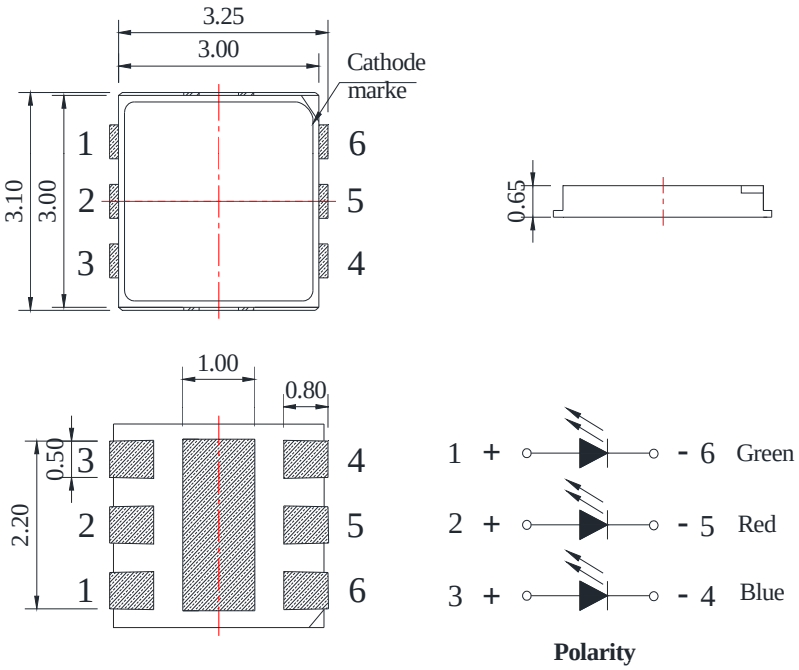

R3030ERGBC-001-1D5W	AlGaInP	Super Bright Red	632	624	Water Clear	2.15	2.40	150	13	15	120
	InGaN	Pure Green	520	525		3.20	3.80		30	35	
	InGaN	Blue	462	457		3.20	3.80		7	9	

3.50mm×3.50mm×2.10mm Ceramic Top View 1W High Power Multi-color LED

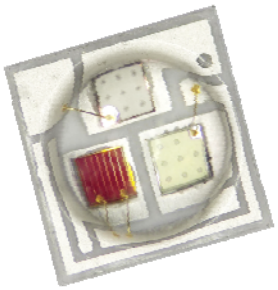

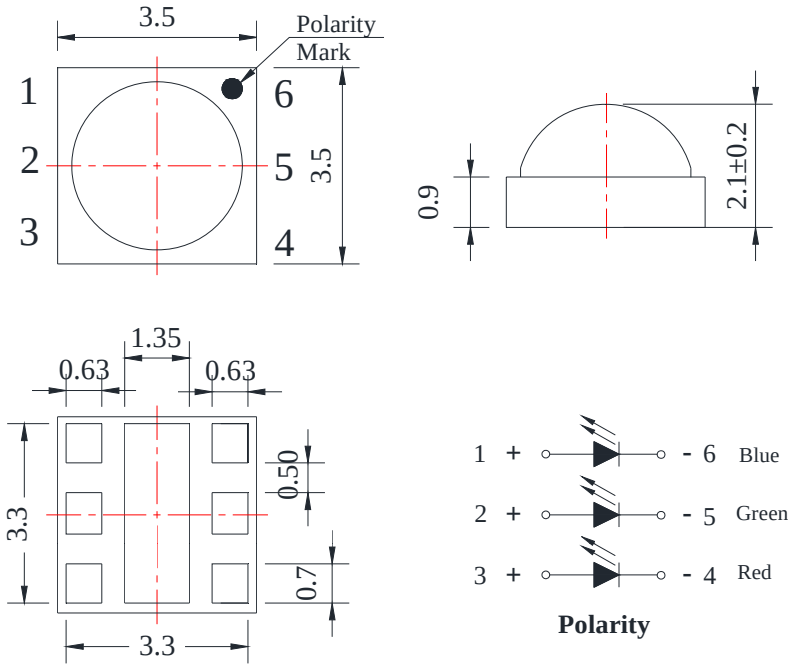

C3535RGBC-002	AlGaInP	Super Bright Red	632	624	Water Clear	2.00	2.60	350	30	40	140
	InGaN	Pure Green	520	525		3.20	3.60		50	75	
	InGaN	Blue	462	457		3.20	3.60		20	25	

Luckylight

Part Number	Chip Material	Emitting Color	λp (nm) / x	λd (nm) / y	Lens Color	VF (V)		ΦV (lm)			Viewing Angle
						Typ.	Max.	IF=mA	Min.	Typ.	2θ ½

5.40mm×5.00mm×1.30mm PLCC-6 Top View 3×0.5W Mid-power Multi-color LED

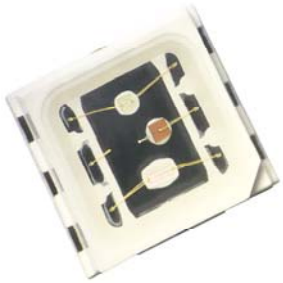

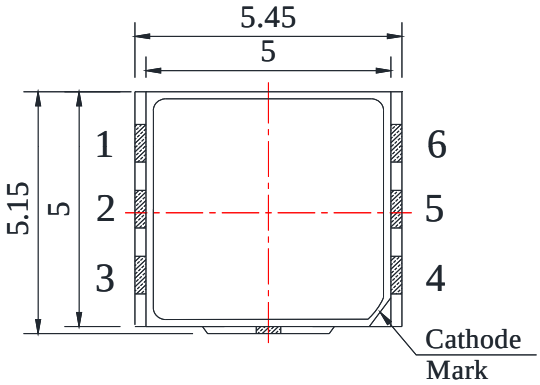

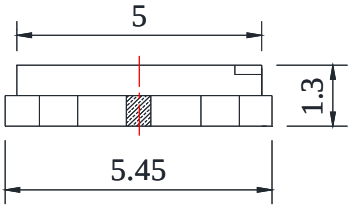

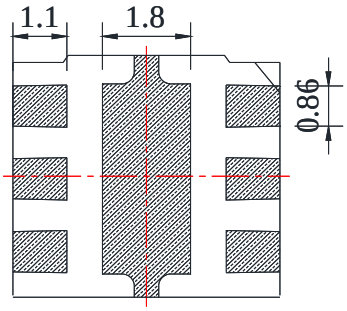

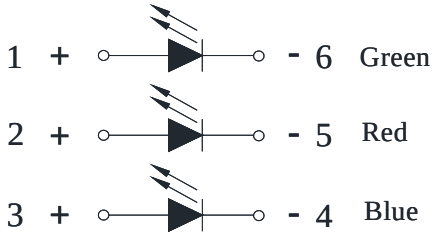

Polarity

R5054RGBC-001-1D5W	AlGaInP	Super Bright Red	632	624	Water Clear	2.15	2.40	150	10	15	120
	InGaN	Pure Green	520	525		3.20	3.80		20	30	
	InGaN	Blue	462	457		3.20	3.80		5	8	

1. All dimensions are in millimeters (inches).
2. Tolerance is ±0.10mm (.004") unless otherwise noted.
3. Specifications are subject to change without notice.

Part Number	Emitting Color	λd (nm) / x, y	Face Color	Luminous Intensity Iv (mcd)		Circuit Common
				IF=mA	Typ.	

0.28" Single Digit LED Display

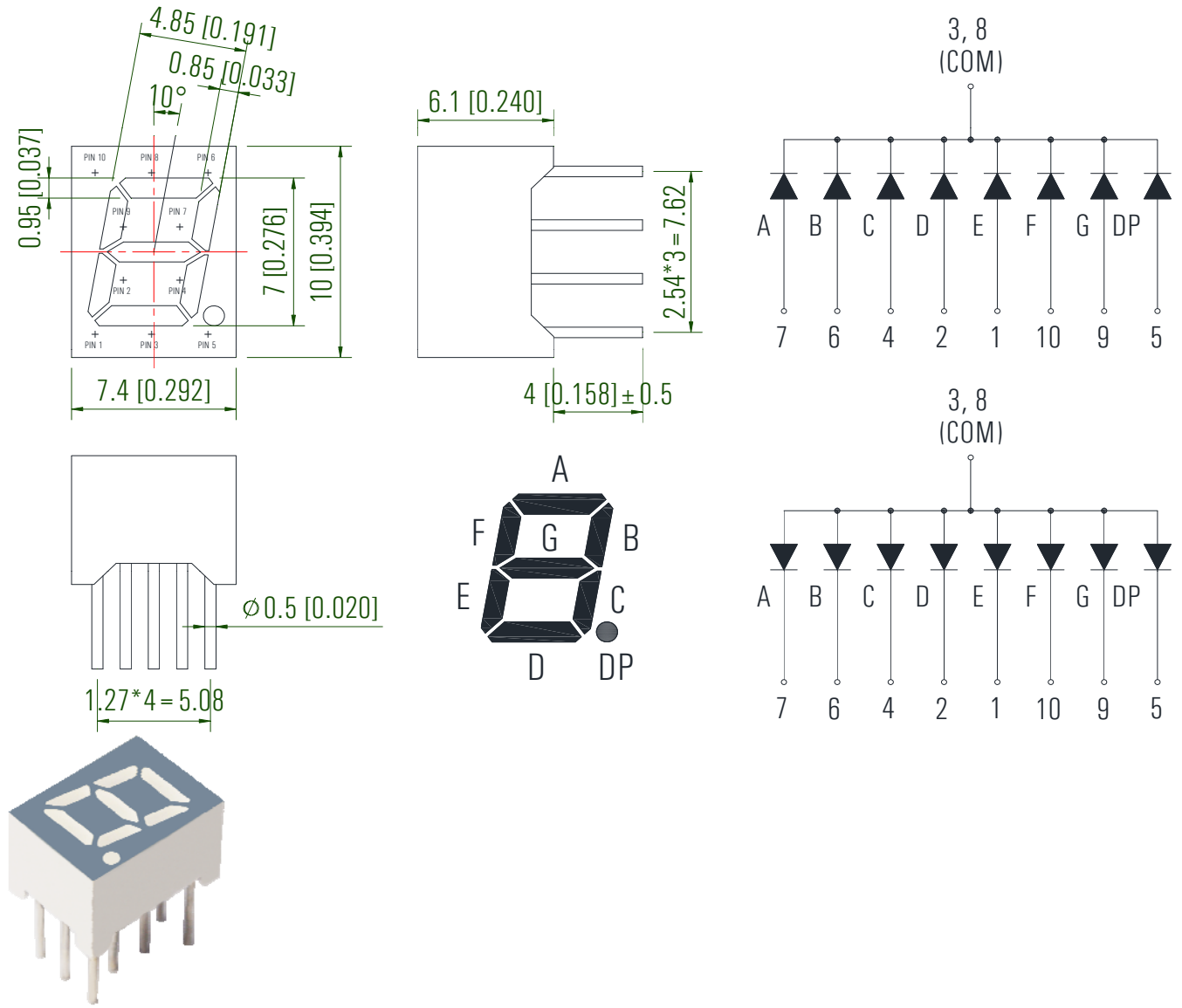

KW1-281CRA	Deep Red	630	Gray	20	22.0	Common Cathode
KW1-281CAA	Orange	605			30.0	
KW1-281CGA	Yellow Green	572			20.0	
KW1-281CGA-G5	Pure Green	525			80.0	
KW1-281CBA	Blue	470			44.0	
KW1-281CWA-Y	White	x=0.30, y=0.31			130.0	
KW1-281ARA	Deep Red	630			22.0	Common Anode
KW1-281AAA	Orange	605			30.0	
KW1-281AGA	Yellow Green	572			20.0	
KW1-281AGA-G5	Pure Green	525			80.0	
KW1-281ABA	Blue	470			44.0	
KW1-281AWA-Y	White	x=0.30, y=0.31			130.0	

Part Number	Emitting Color	λd (nm) / x, y	Face Color	Luminous Intensity Iv (mcd)		Circuit Common
				IF=mA	Typ.	

0.30" Single Digit LED Display

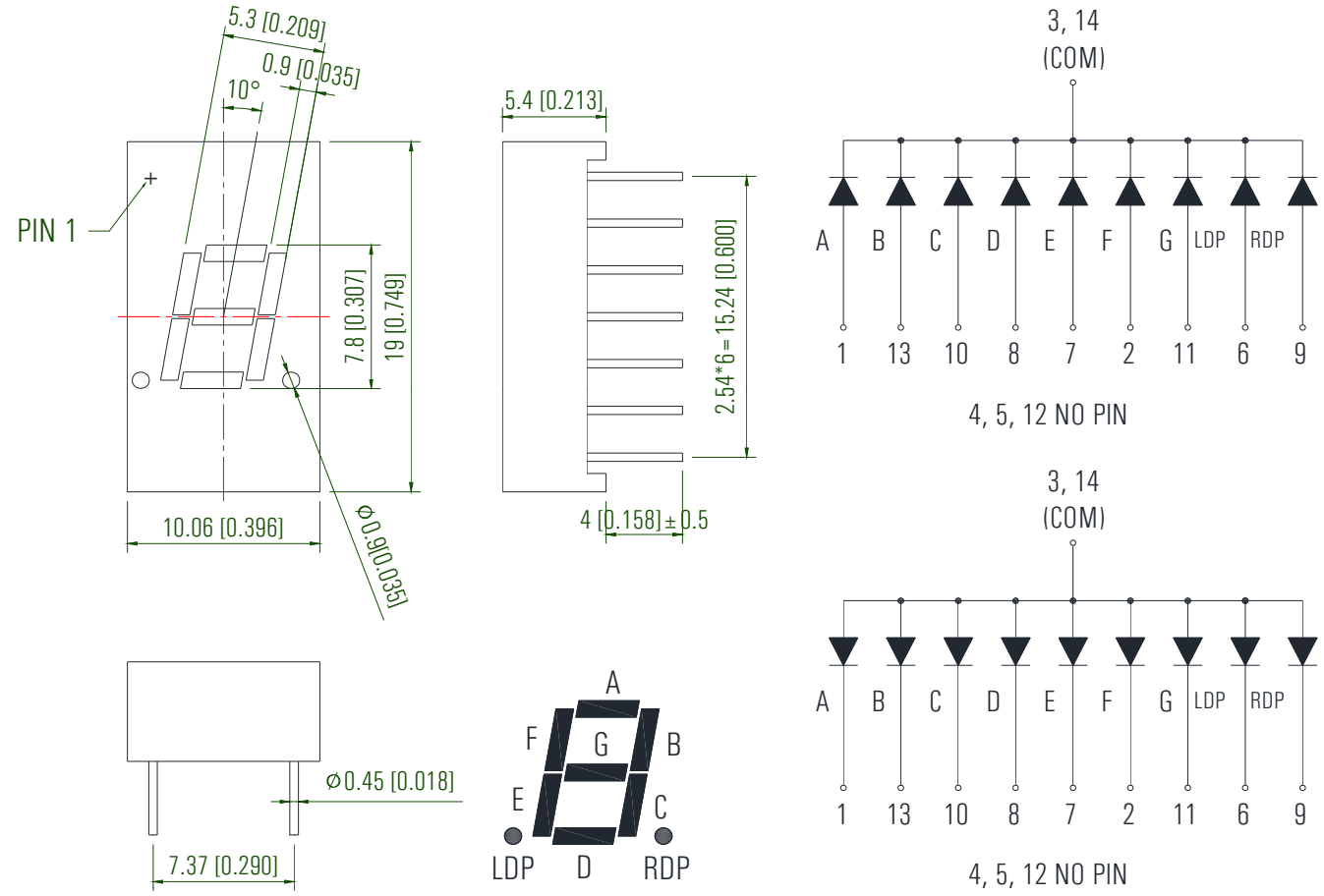

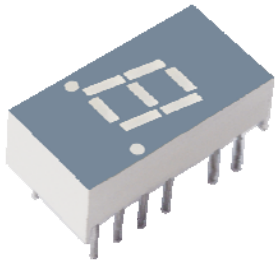

KW1-301CRA	Deep Red	630	Gray	20	24.0	Common Cathode
KW1-301CAA	Orange	605			32.0	
KW1-301CGA	Yellow Green	572			22.0	
KW1-301CGA-G5	Pure Green	525			84.0	
KW1-301CBA	Blue	470			46.0	
KW1-301CWA-Y	White	x=0.30, y=0.31			136.0	
KW1-301ARA	Deep Red	630			24.0	Common Anode
KW1-301AAA	Orange	605			32.0	
KW1-301AGA	Yellow Green	572			22.0	
KW1-301AGA-G5	Pure Green	525			84.0	
KW1-301ABA	Blue	470			46.0	
KW1-301AWA-Y	White	x=0.30, y=0.31			136.0	

Part Number	Emitting Color	λd (nm) / x, y	Face Color	Luminous Intensity Iv (mcd)		Circuit Common
				IF=mA	Typ.	

0.32" Single Digit LED Display

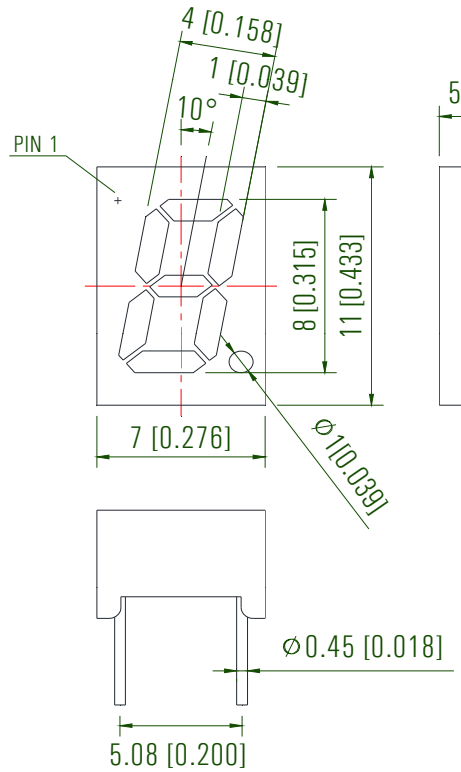

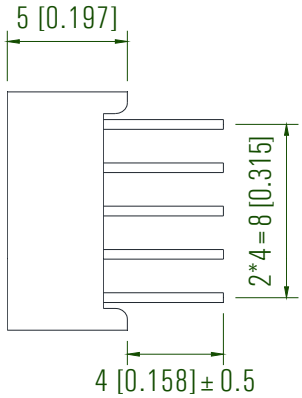

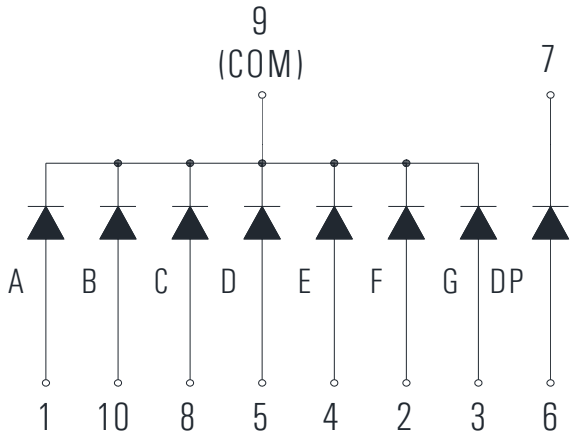

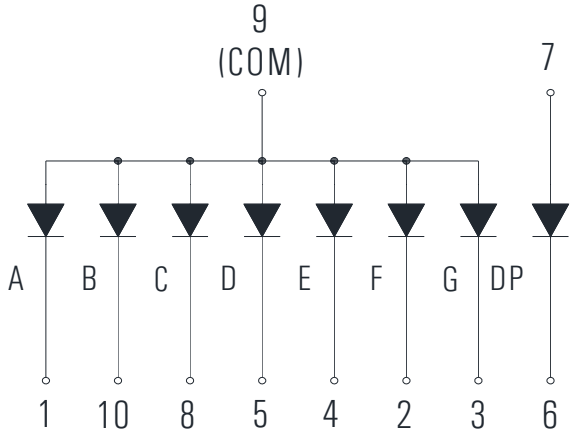

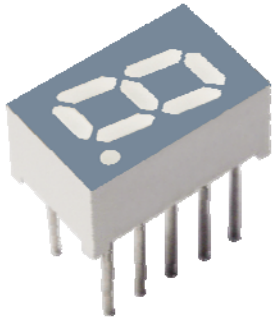

KW1-321CRA	Deep Red	630	Gray	20	18.0	Common Cathode
KW1-321CAA	Orange	605			28.0	
KW1-321CGA	Yellow Green	572			16.0	
KW1-321CGA-G5	Pure Green	525			78.0	
KW1-321CBA	Blue	470			40.0	
KW1-321CWA-Y	White	x=0.30, y=0.31			120.0	
KW1-321ARA	Deep Red	630			18.0	Common Anode
KW1-321AAA	Orange	605			28.0	
KW1-321AGA	Yellow Green	572			16.0	
KW1-321AGA-G5	Pure Green	525			78.0	
KW1-321ABA	Blue	470			40.0	
KW1-321AWA-Y	White	x=0.30, y=0.31			120.0	

Part Number	Emitting Color	λd (nm) / x, y	Face Color	Luminous Intensity Iv (mcd)		Circuit Common
				IF=mA	Typ.	

0.36" Single Digit LED Display

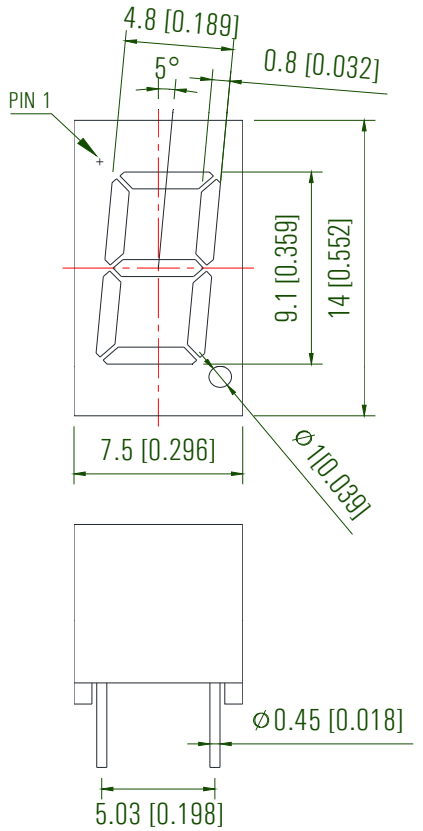

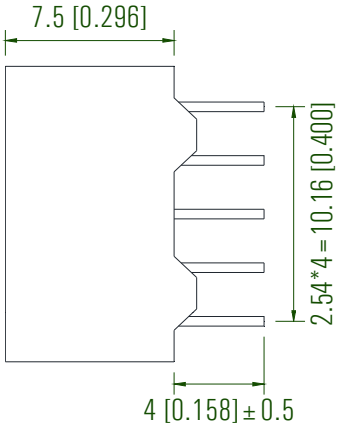

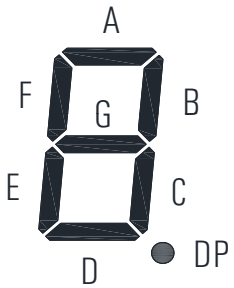

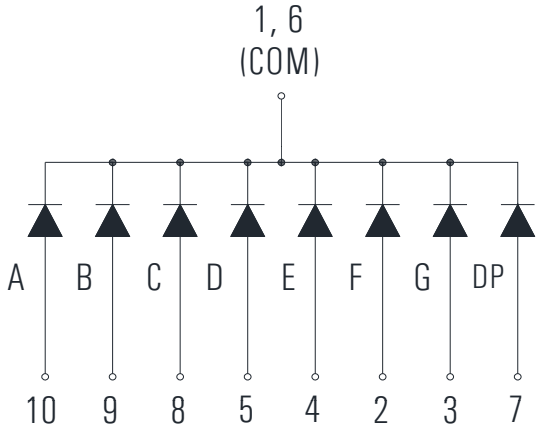

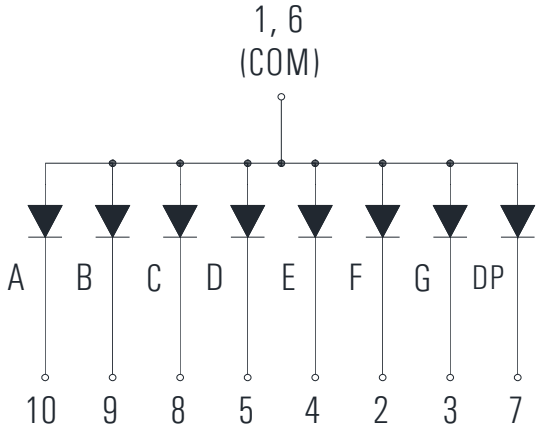

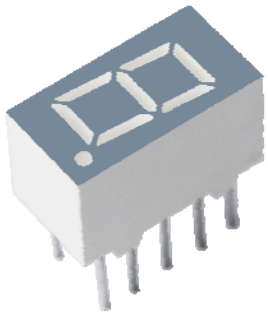

KW1-361CRA	Deep Red	630	Gray	20	16.0	Common Cathode
KW1-361CAA	Orange	605			22.0	
KW1-361CGA	Yellow Green	572			14.0	
KW1-361CGA-G5	Pure Green	525			70.0	
KW1-361CBA	Blue	470			32.0	
KW1-361CWA-Y	White	x=0.30, y=0.31			100.0	
KW1-361ARA	Deep Red	630			16.0	Common Anode
KW1-361AAA	Orange	605			22.0	
KW1-361AGA	Yellow Green	572			14.0	
KW1-361AGA-G5	Pure Green	525			70.0	
KW1-361ABA	Blue	470			32.0	
KW1-361AWA-Y	White	x=0.30, y=0.31			100.0	

Part Number	Emitting Color	λd (nm) / x, y	Face Color	Luminous Intensity Iv (mcd)		Circuit Common
				IF=mA	Typ.	

0.39" Single Digit LED Display

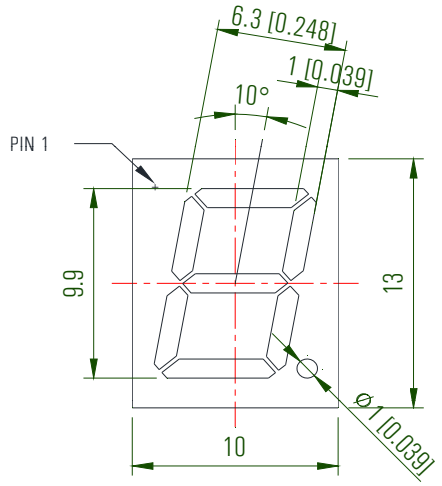

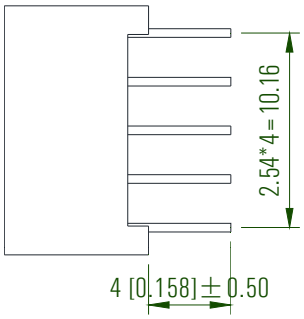

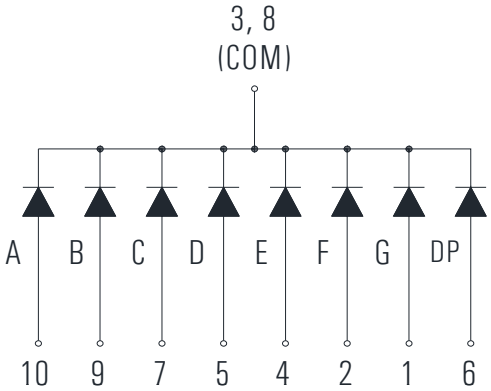

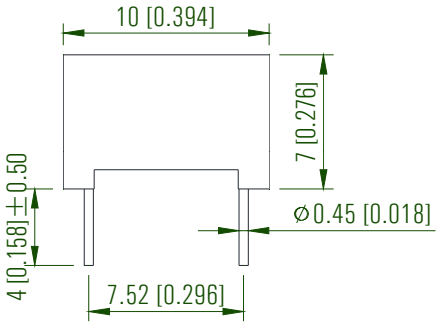

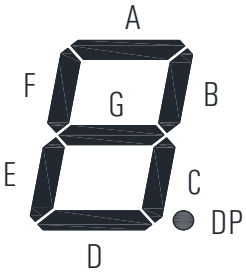

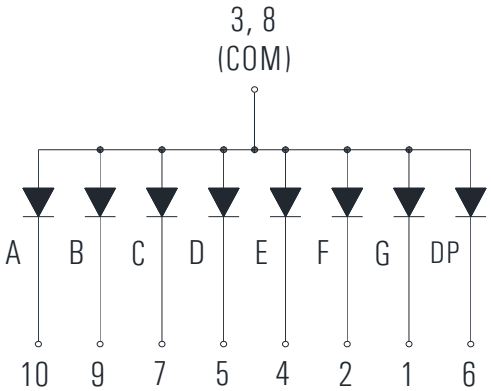

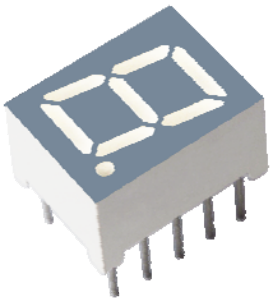

KW1-391CRA	Deep Red	630	Gray	20	26.0	Common Cathode
KW1-391CAA	Orange	605			30.0	
KW1-391CGA	Yellow Green	572			24.0	
KW1-391CGA-G5	Pure Green	525			100.0	
KW1-391CBA	Blue	470			32.0	
KW1-391CWA-Y	White	x=0.30, y=0.31			110.0	
KW1-391ARA	Deep Red	630			26.0	Common Anode
KW1-391AAA	Orange	605			30.0	
KW1-391AGA	Yellow Green	572			24.0	
KW1-391AGA-G5	Pure Green	525			100.0	
KW1-391ABA	Blue	470			32.0	
KW1-391AWA-Y	White	x=0.30, y=0.31			110.0	

Part Number	Emitting Color	λd (nm) / x, y	Face Color	Luminous Intensity Iv (mcd)		Circuit Common
				IF=mA	Typ.	

0.40" Single Digit LED Display

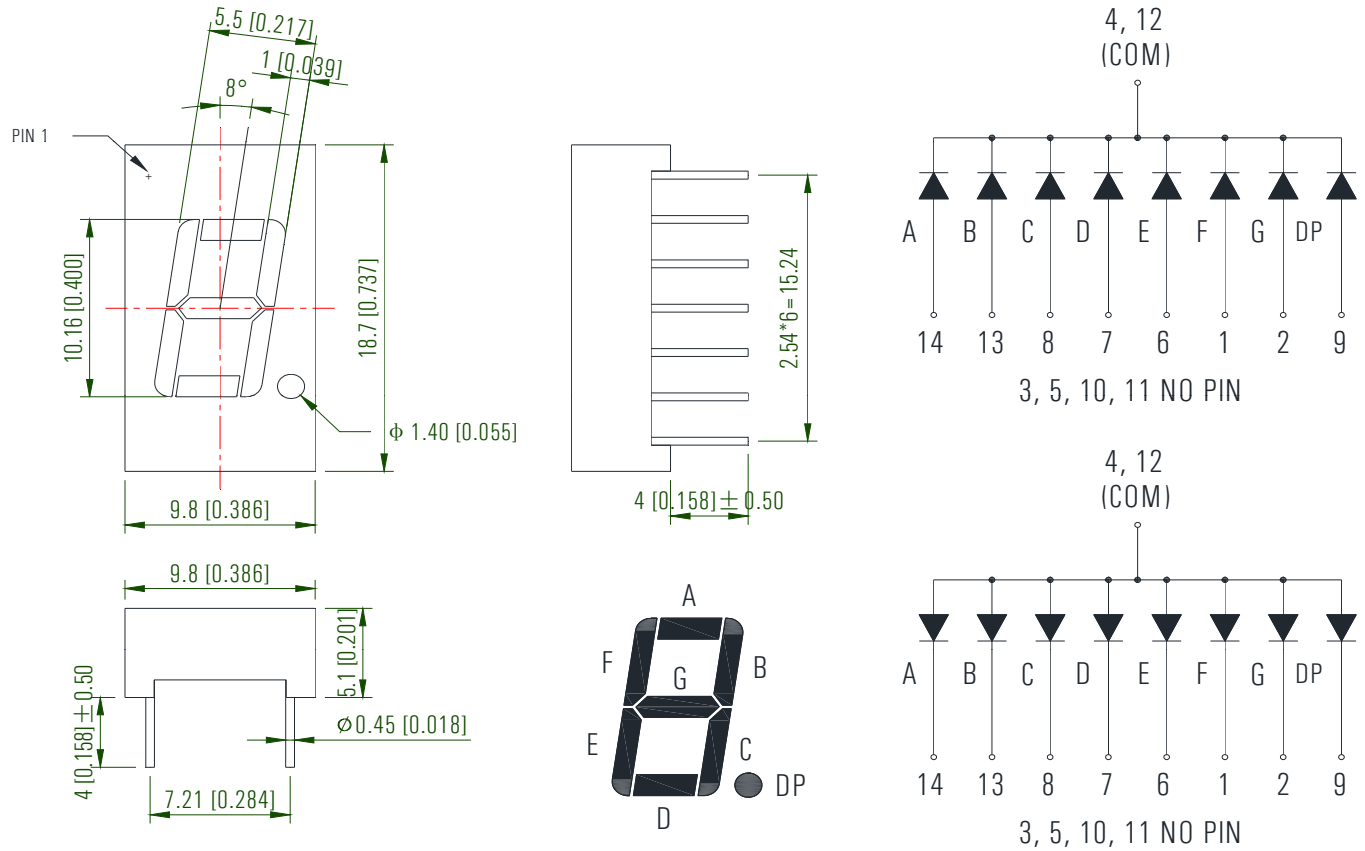

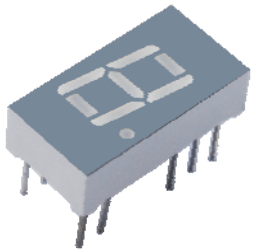

KW1-401CRA	Deep Red	630	Gray	20	30.0	Common Cathode
KW1-401CAA	Orange	605			28.0	
KW1-401CGA	Yellow Green	572			16.0	
KW1-401CGA-G5	Pure Green	525			96.0	
KW1-401CBA	Blue	470			20.0	
KW1-401CWA	White	x=0.27, y=0.28			100.0	
KW1-401ARA	Deep Red	630			30.0	Common Anode
KW1-401AAA	Orange	605			28.0	
KW1-401AGA	Yellow Green	572			16.0	
KW1-401AGA-G5	Pure Green	525			96.0	
KW1-401ABA	Blue	470			20.0	
KW1-401AWA	White	x=0.27, y=0.28			100.0	

Part Number	Emitting Color	λd (nm) / x, y	Face Color	Luminous Intensity Iv (mcd)		Circuit Common
				IF=mA	Typ.	

0.50" Single Digit LED Display

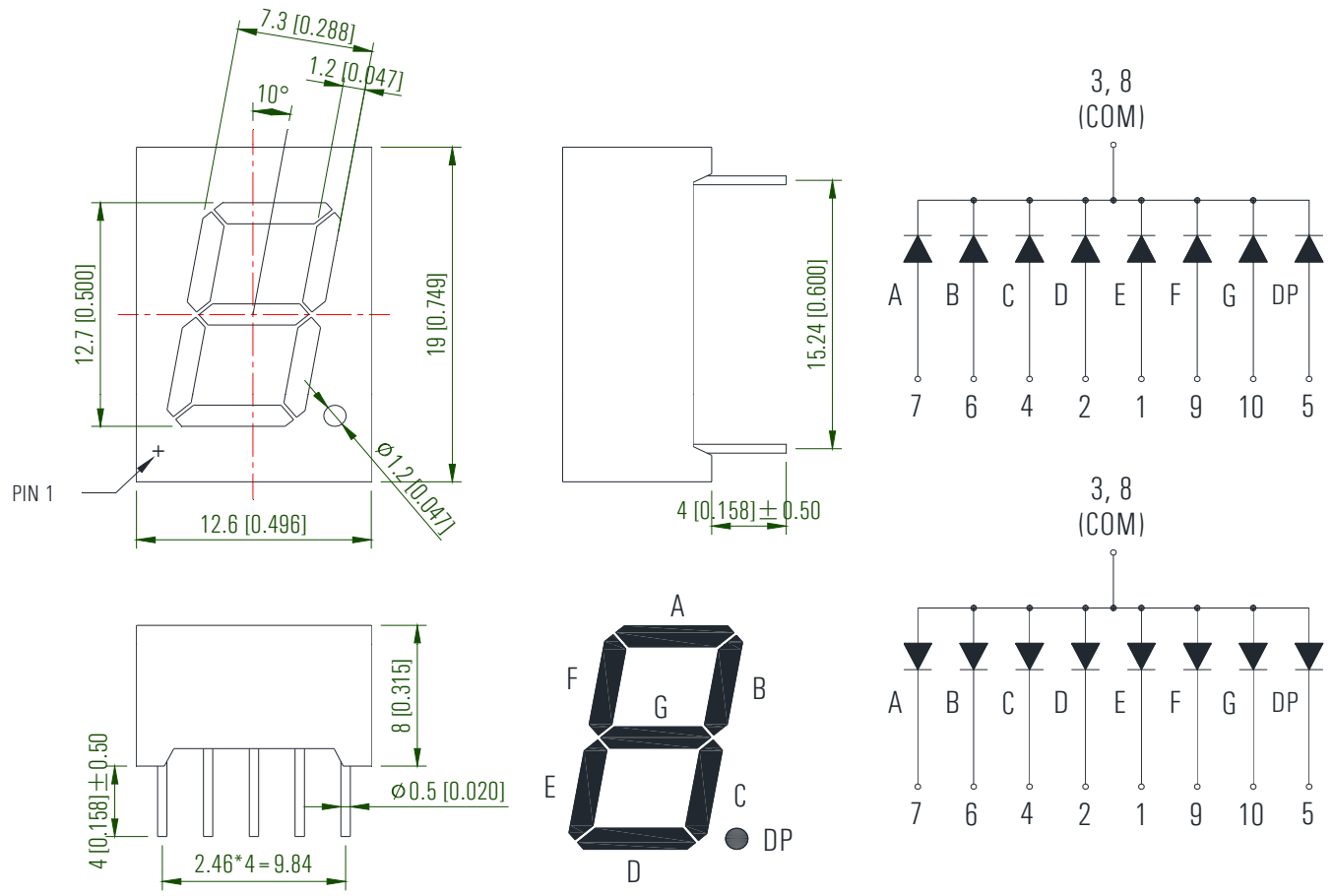

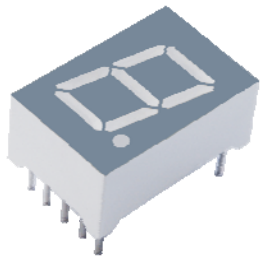

KW1-501CRA	Deep Red	630	Gray	20	40.0	Common Cathode
KW1-501CAA	Orange	605			30.0	
KW1-501CGA	Yellow Green	572			18.0	
KW1-501CGA-G5	Pure Green	525			220.0	
KW1-501CBA	Blue	470			50.0	
KW1-501CWA	White	x=0.30, y=0.31			260.0	
KW1-501ARA	Deep Red	630			40.0	Common Anode
KW1-501AAA	Orange	605			30.0	
KW1-501AGA	Yellow Green	572			18.0	
KW1-501AGA-G5	Pure Green	525			220.0	
KW1-501ABA	Blue	470			50.0	
KW1-501AWA	White	x=0.30, y=0.31			260.0	

Part Number	Emitting Color	λd (nm) / x, y	Face Color	Luminous Intensity Iv (mcd)		Circuit Common
				IF=mA	Typ.	

0.52" Single Digit LED Display

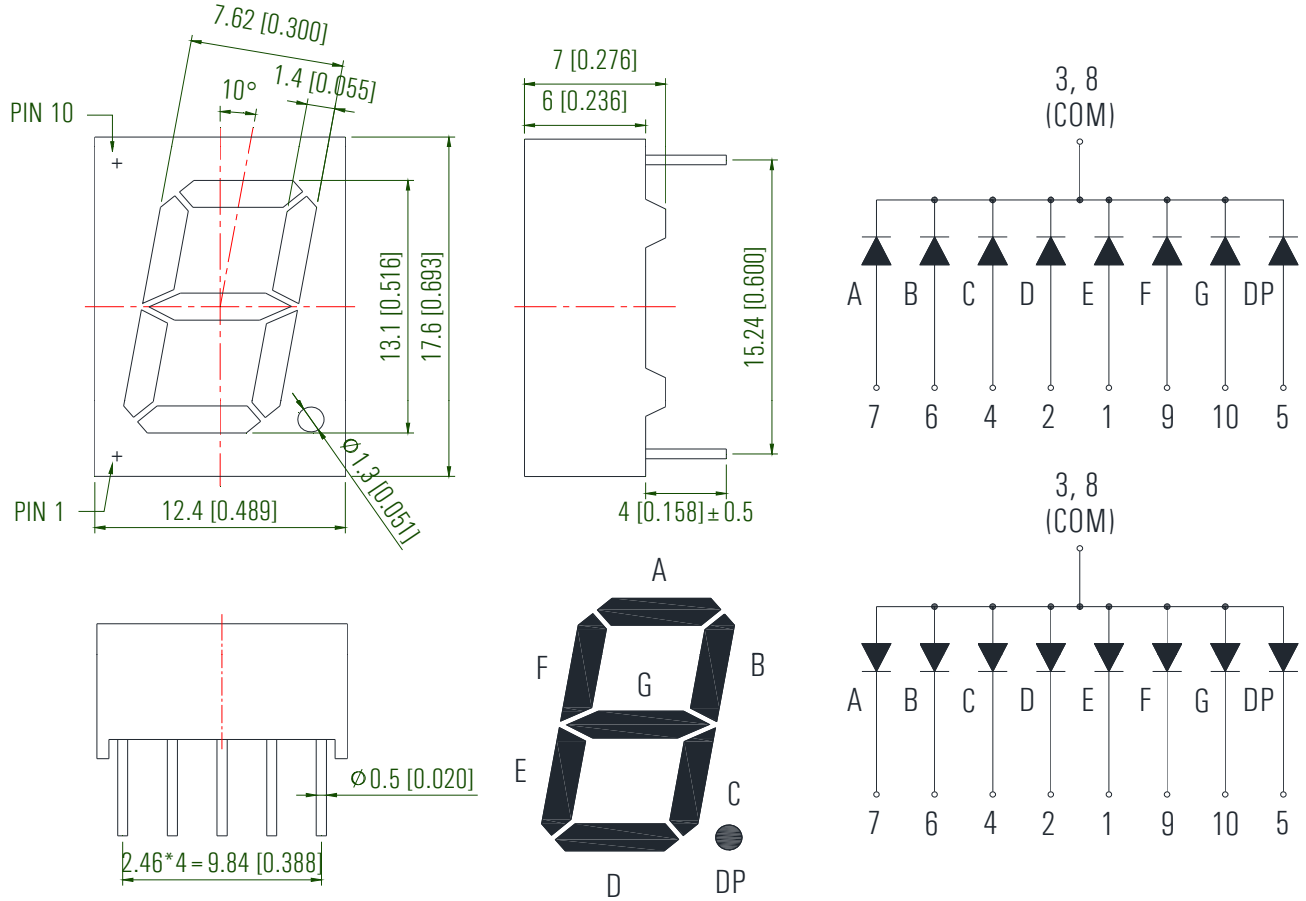

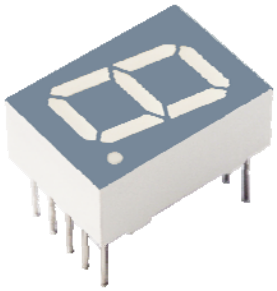

KW1-521CRA	Deep Red	630	Gray	20	40.0	Common Cathode
KW1-521CAA	Orange	605			30.0	
KW1-521CGA	Yellow Green	572			18.0	
KW1-521CGA-G5	Pure Green	525			220.0	
KW1-521CBA	Blue	470			50.0	
KW1-521CWA	White	x=0.30, y=0.31			260.0	
KW1-521ARA	Deep Red	630			40.0	Common Anode
KW1-521AAA	Orange	605			30.0	
KW1-521AGA	Yellow Green	572			18.0	
KW1-521AGA-G5	Pure Green	525			220.0	
KW1-521ABA	Blue	470			50.0	
KW1-521AWA	White	x=0.30, y=0.31			260.0	

Part Number	Emitting Color	λd (nm) / x, y	Face Color	Luminous Intensity Iv (mcd)		Circuit Common
				IF=mA	Typ.	

0.56" Single Digit LED Display

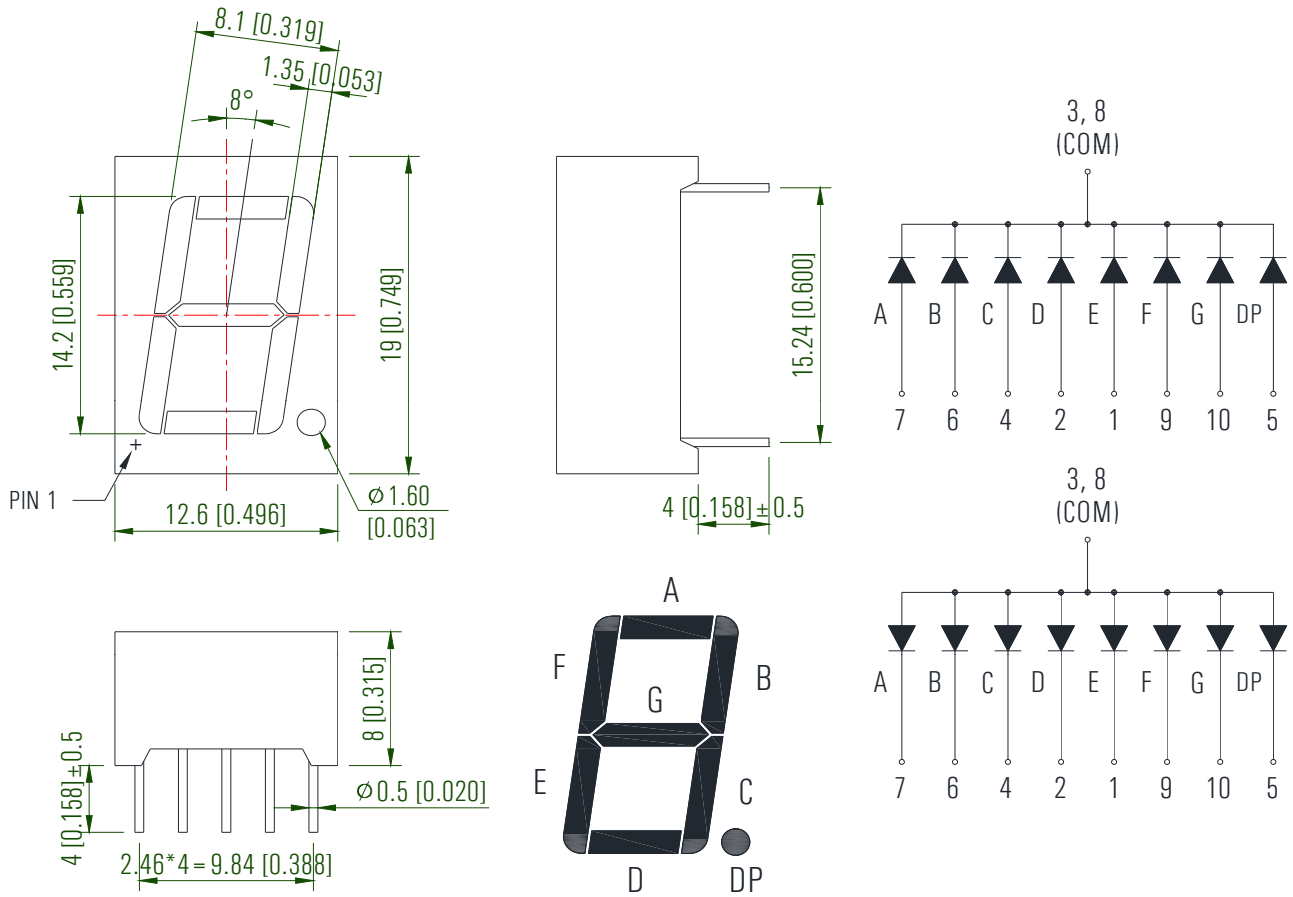

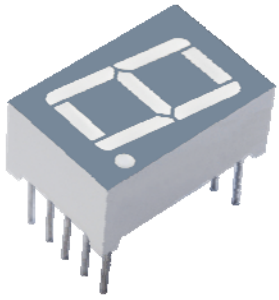

KW1-561CRA	Deep Red	630	Gray	20	40.0	Common Cathode
KW1-561CAA	Orange	605			30.0	
KW1-561CGA	Yellow Green	572			18.0	
KW1-561CGA-G5	Pure Green	525			220.0	
KW1-561CBA	Blue	470			50.0	
KW1-561CWA	White	x=0.30, y=0.31			260.0	
KW1-561ARA	Deep Red	630			40.0	Common Anode
KW1-561AAA	Orange	605			30.0	
KW1-561AGA	Yellow Green	572			18.0	
KW1-561AGA-G5	Pure Green	525			220.0	
KW1-561ABA	Blue	470			50.0	
KW1-561AWA	White	x=0.30, y=0.31			260.0	

Part Number	Emitting Color	λd (nm) / x, y	Face Color	Luminous Intensity Iv (mcd)		Circuit Common
				IF=mA	Typ.	

0.56" Single Digit LED Display

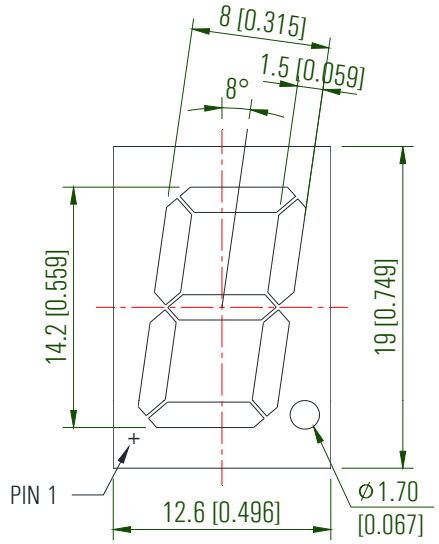

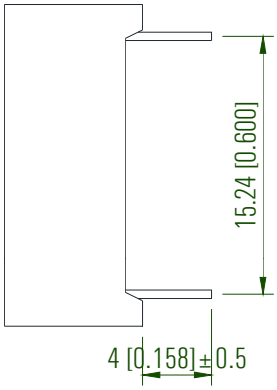

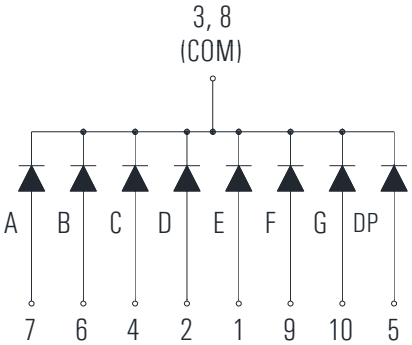

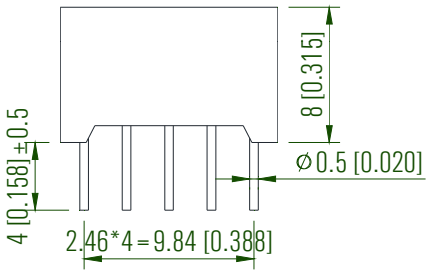

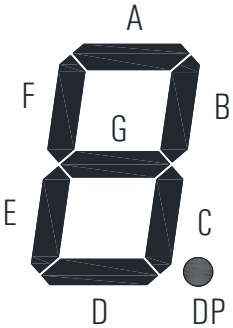

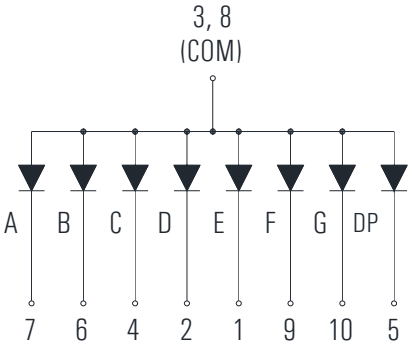

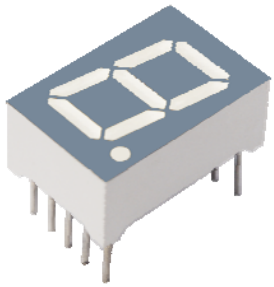

KW1-562CRA	Deep Red	630	Gray	20	40.0	Common Cathode
KW1-562CAA	Orange	605			30.0	
KW1-562CGA	Yellow Green	572			18.0	
KW1-562CGA-G5	Pure Green	525			220.0	
KW1-562CBA	Blue	470			50.0	
KW1-562CWA	White	x=0.30, y=0.31			260.0	
KW1-562ARA	Deep Red	630			40.0	Common Anode
KW1-562AAA	Orange	605			30.0	
KW1-562AGA	Yellow Green	572			18.0	
KW1-562AGA-G5	Pure Green	525			220.0	
KW1-562ABA	Blue	470			50.0	
KW1-562AWA	White	x=0.30, y=0.31			260.0	

Part Number	Emitting Color	λd (nm) / x, y	Face Color	Luminous Intensity Iv (mcd)		Circuit Common
				IF=mA	Typ.	

0.56" Single Digit LED Display

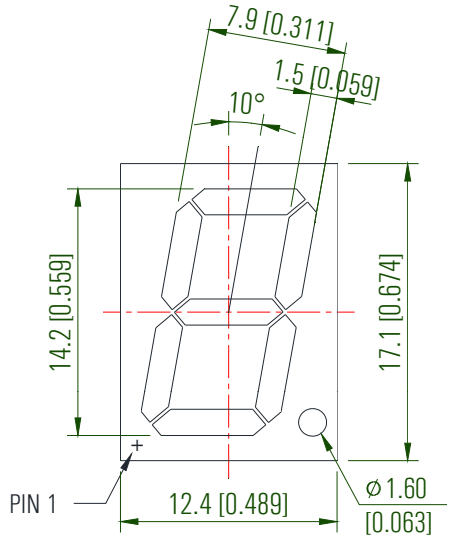

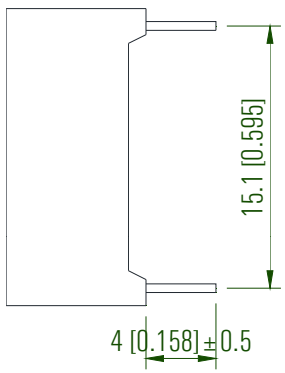

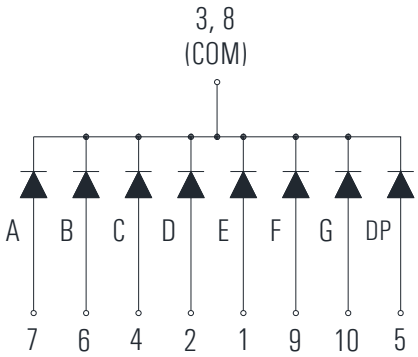

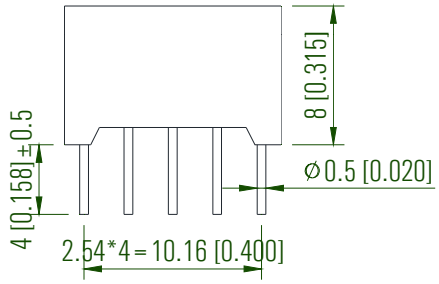

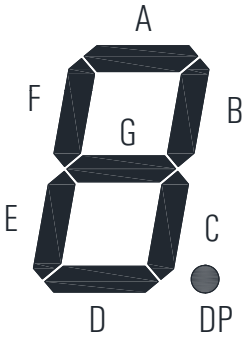

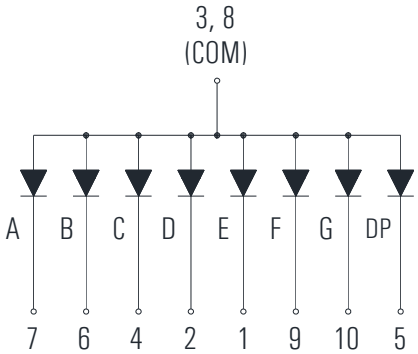

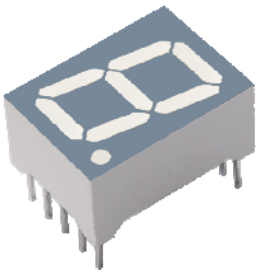

KW1-563CRA	Deep Red	630	Gray	20	40.0	Common Cathode
KW1-563CAA	Orange	605			30.0	
KW1-563CGA	Yellow Green	572			18.0	
KW1-563CGA-G5	Pure Green	525			220.0	
KW1-563CBA	Blue	470			50.0	
KW1-563CWA	White	x=0.30, y=0.31			260.0	
KW1-563ARA	Deep Red	630			40.0	Common Anode
KW1-563AAA	Orange	605			30.0	
KW1-563AGA	Yellow Green	572			18.0	
KW1-563AGA-G5	Pure Green	525			220.0	
KW1-563ABA	Blue	470			50.0	
KW1-563AWA	White	x=0.30, y=0.31			260.0	

Part Number	Emitting Color	λd (nm) / x, y	Face Color	Luminous Intensity Iv (mcd)		Circuit Common
				IF=mA	Typ.	

0.60" Single Digit LED Display

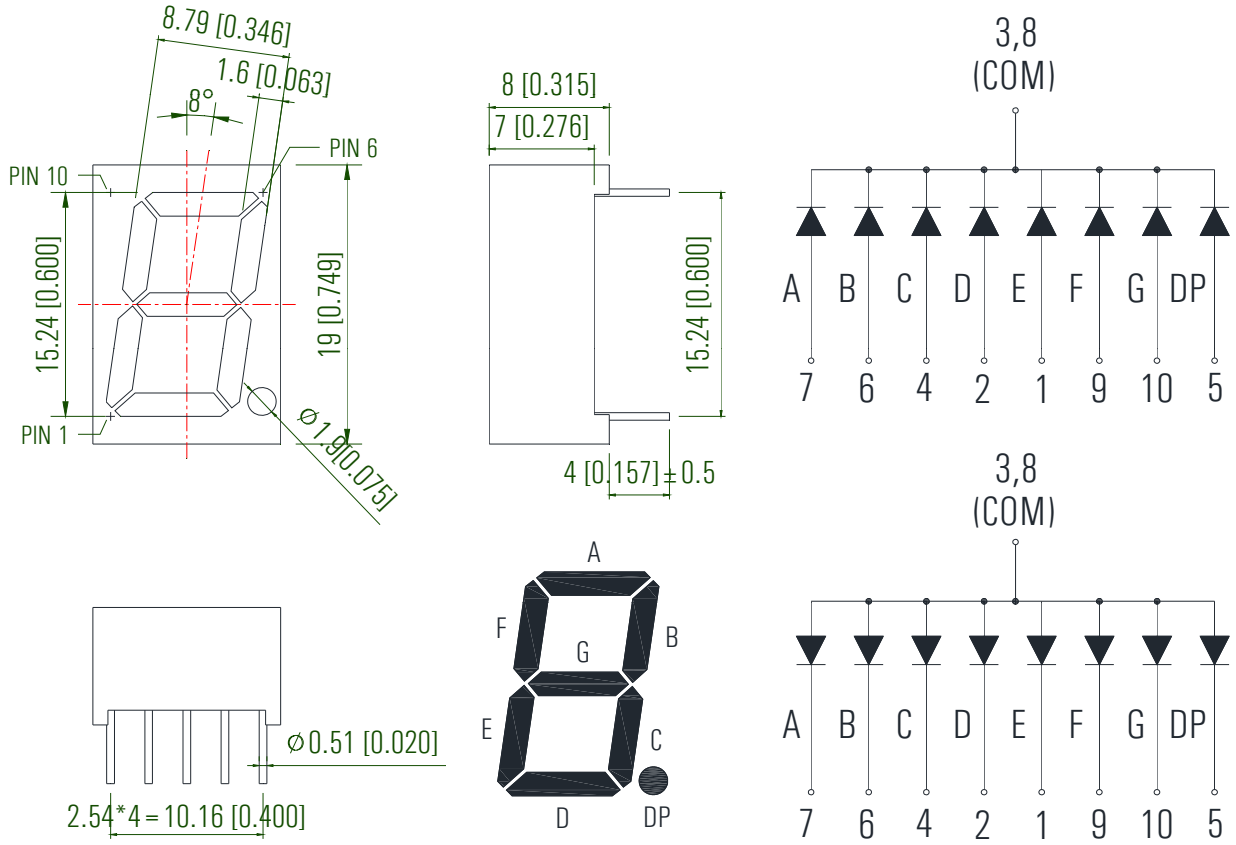

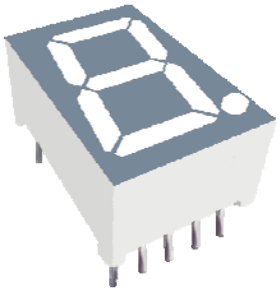

KW1-603CRA	Deep Red	630	Gray	20	41.0	Common Cathode
KW1-603CAA	Orange	605			31.0	
KW1-603CGA	Yellow Green	572			19.0	
KW1-603CGA-G5	Pure Green	525			224.0	
KW1-603CBA	Blue	470			52.0	
KW1-603CWA	White	x=0.30, y=0.31			264.0	
KW1-603ARA	Deep Red	630			41.0	Common Anode
KW1-603AAA	Orange	605			31.0	
KW1-603AGA	Yellow Green	572			19.0	
KW1-603AGA-G5	Pure Green	525			224.0	
KW1-603ABA	Blue	470			52.0	
KW1-603AWA	White	x=0.30, y=0.31			264.0	

Part Number	Emitting Color	λd (nm) / x, y	Face Color	Luminous Intensity Iv (mcd)		Circuit Common
				IF=mA	Typ.	

0.80" Single Digit LED Display

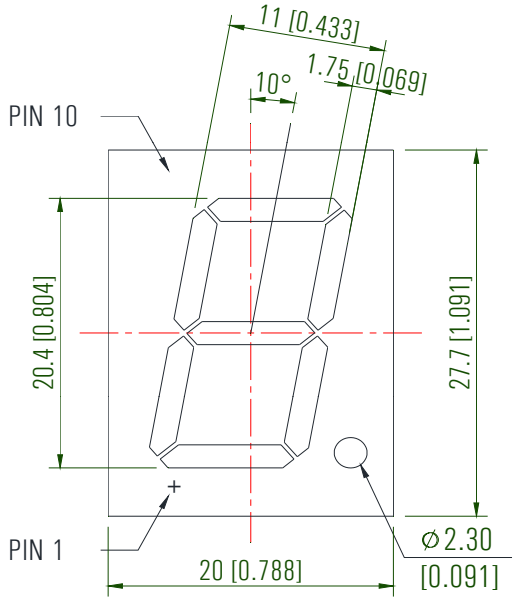

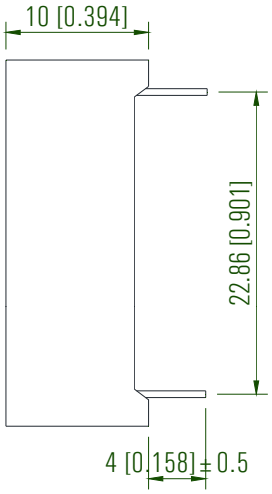

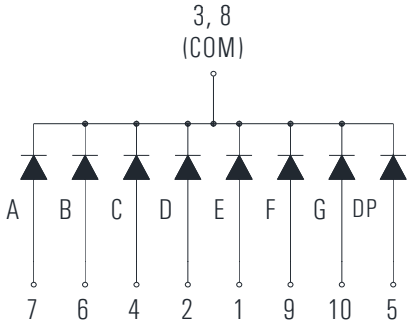

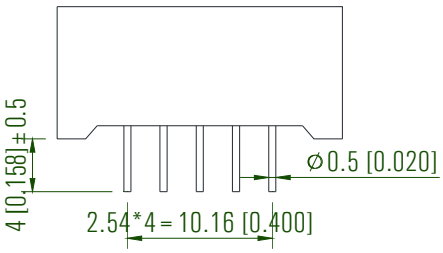

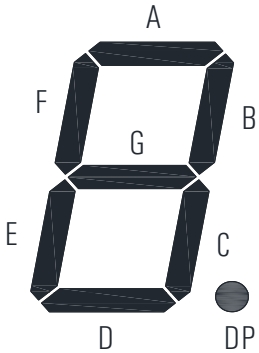

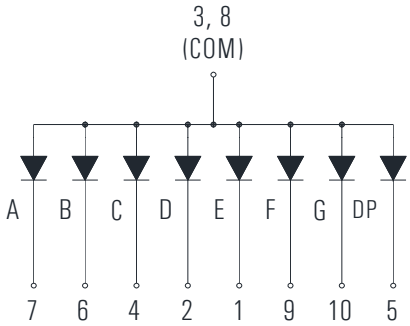

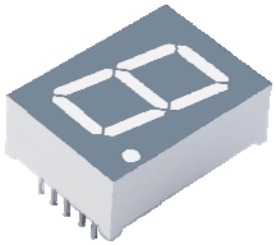

KW1-801CRA	Deep Red	630	Gray	20	42.0	Common Cathode
KW1-801CAA	Orange	605			34.0	
KW1-801CGA	Yellow Green	572			20.0	
KW1-801CGA-G5	Pure Green	525			240.0	
KW1-801CBA	Blue	470			56.0	
KW1-801CWA	White	x=0.30, y=0.31			270.0	
KW1-801ARA	Deep Red	630			42.0	Common Anode
KW1-801AAA	Orange	605			34.0	
KW1-801AGA	Yellow Green	572			20.0	
KW1-801AGA-G5	Pure Green	525			240.0	
KW1-801ABA	Blue	470			56.0	
KW1-801AWA	White	x=0.30, y=0.31			270.0	

Part Number	Emitting Color	λd (nm) / x, y	Face Color	Luminous Intensity Iv (mcd)		Circuit Common
				IF=mA	Typ.	

0.80" Single Digit LED Display

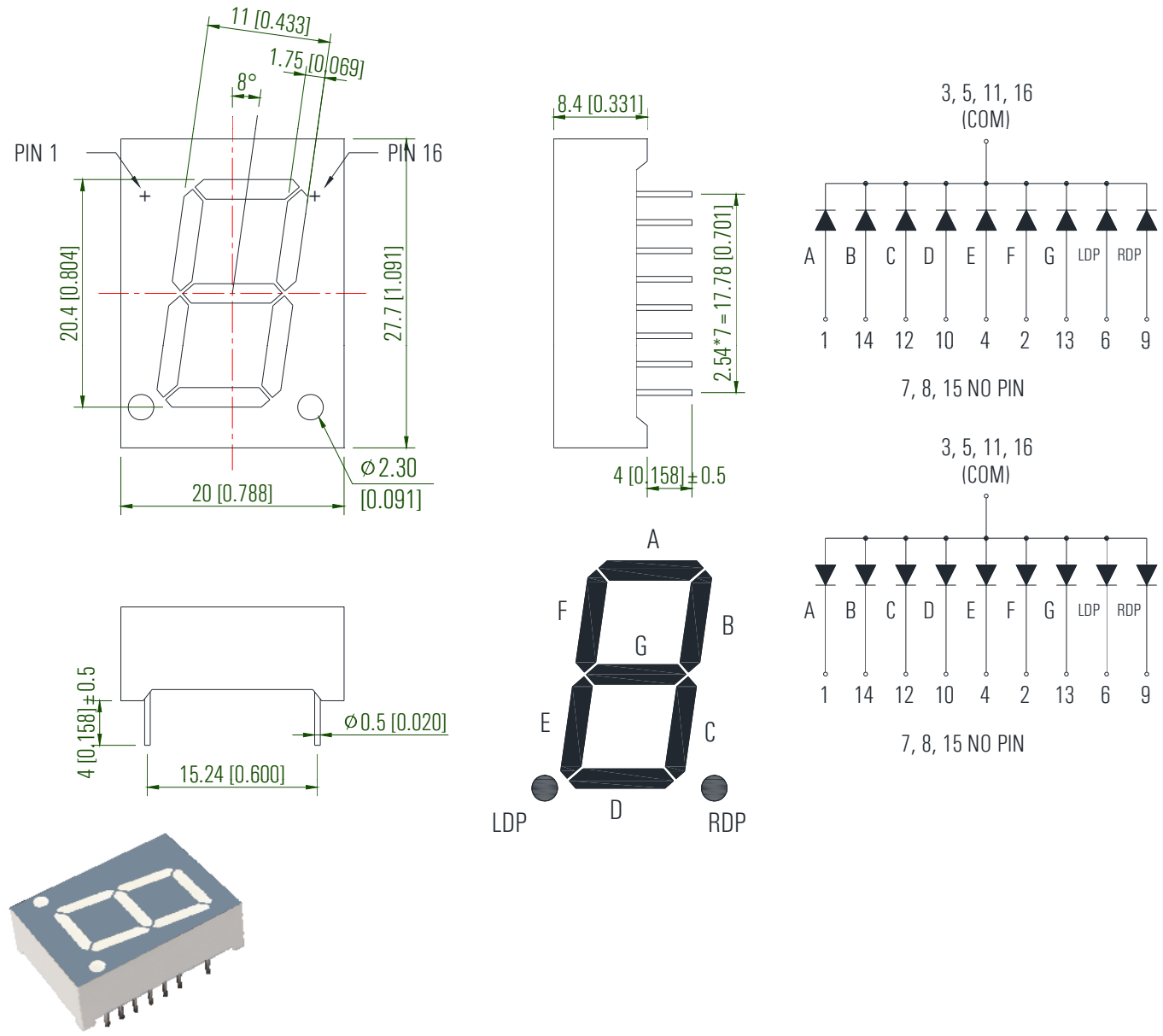

KW1-802CRA	Deep Red	630	Gray	20	42.0	Common Cathode
KW1-802CAA	Orange	605			34.0	
KW1-802CGA	Yellow Green	572			20.0	
KW1-802CGA-G5	Pure Green	525			240.0	
KW1-802CBA	Blue	470			56.0	
KW1-802CWA	White	x=0.30, y=0.31			270.0	
KW1-802ARA	Deep Red	630			42.0	Common Anode
KW1-802AAA	Orange	605			34.0	
KW1-802AGA	Yellow Green	572			20.0	
KW1-802AGA-G5	Pure Green	525			240.0	
KW1-802ABA	Blue	470			56.0	
KW1-802AWA	White	x=0.30, y=0.31			270.0	

Part Number	Emitting Color	λd (nm) / x, y	Face Color	Luminous Intensity Iv (mcd)		Circuit Common
				IF=mA	Typ.	

1.00" Single Digit LED Display

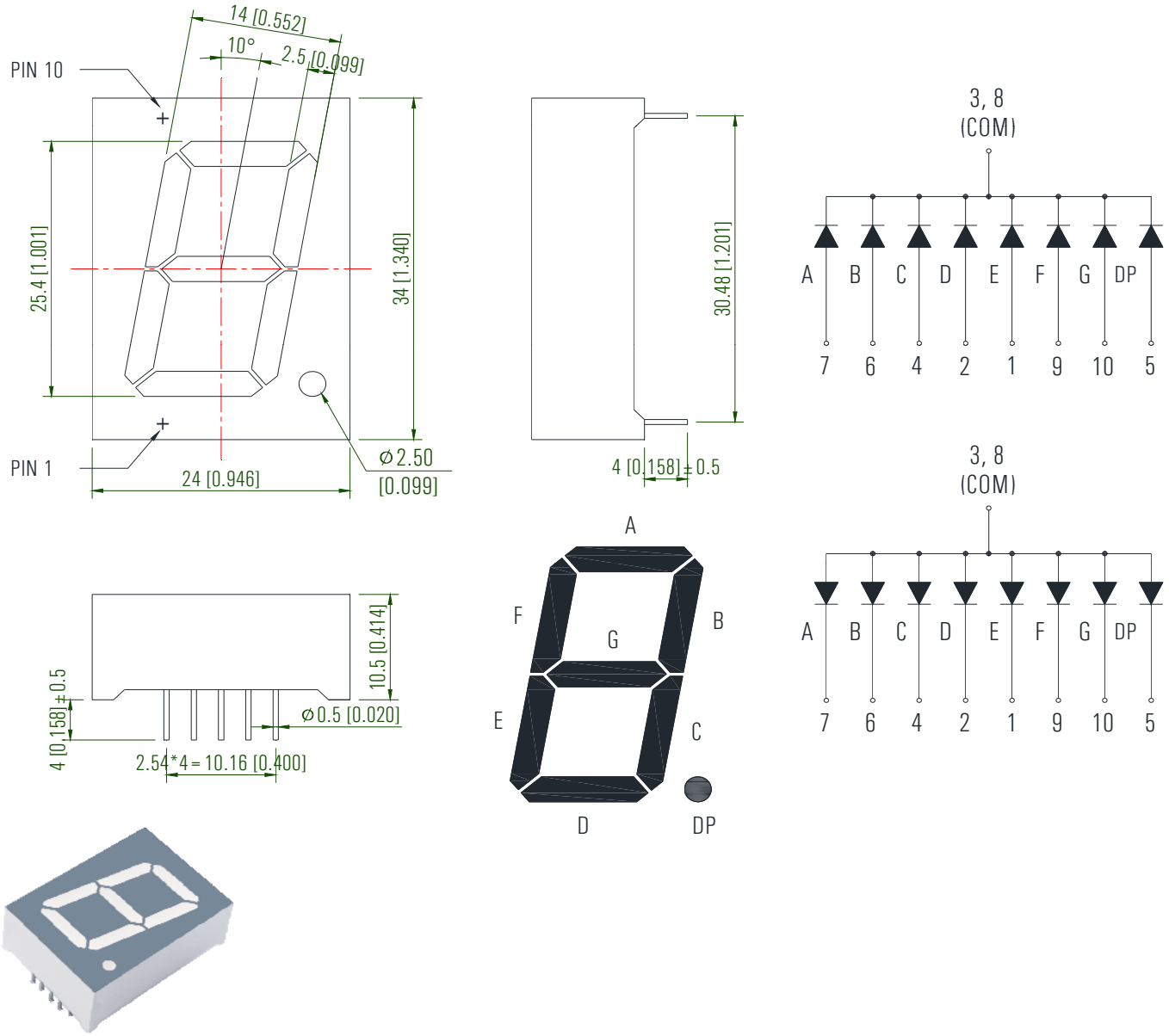

KW1-1002CRA	Deep Red	630	Gray	20	44.0	Common Cathode
KW1-1002CAA	Orange	605			58.0	
KW1-1002CGA	Yellow Green	572			26.0	
KW1-1002CGA-G5	Pure Green	525			260.0	
KW1-1002CBA	Blue	470			76.0	
KW1-1002CWA	White	x=0.30, y=0.31			290.0	
KW1-1002ARA	Deep Red	630			44.0	Common Anode
KW1-1002AAA	Orange	605			58.0	
KW1-1002AGA	Yellow Green	572			26.0	
KW1-1002AGA-G5	Pure Green	525			260.0	
KW1-1002ABA	Blue	470			76.0	
KW1-1002AWA	White	x=0.30, y=0.31			290.0	

Part Number	Emitting Color	λd (nm) / x, y	Face Color	Luminous Intensity Iv (mcd)		Circuit Common
				IF=mA	Typ.	

1.20" Single Digit LED Display

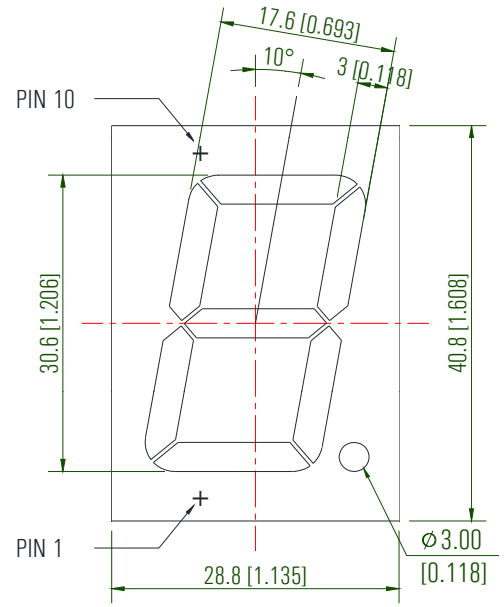

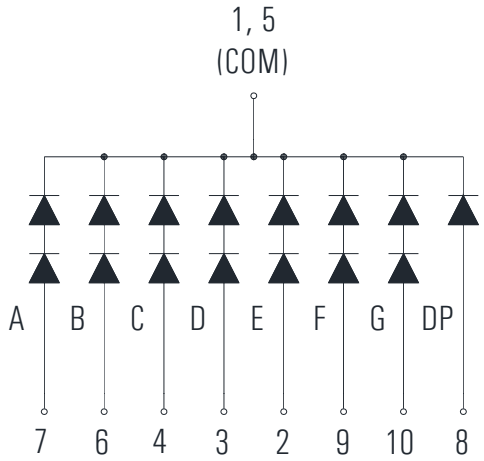

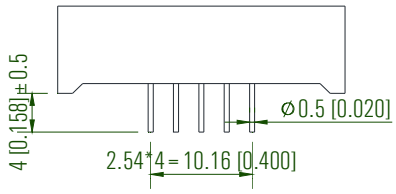

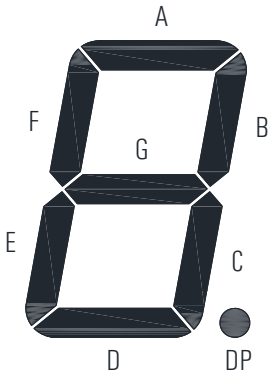

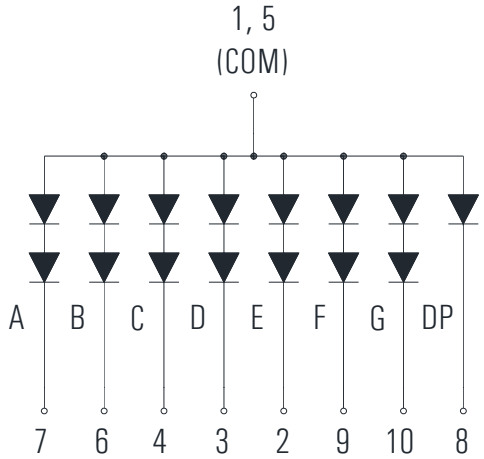

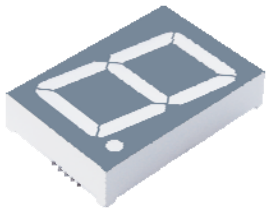

KW1-1201CRA	Deep Red	630	Gray	20	40.0	Common Cathode
KW1-1201CAA	Orange	605			48.0	
KW1-1201CGA	Yellow Green	572			20.0	
KW1-1201CGA-G5	Pure Green	525			248.0	
KW1-1201CBA	Blue	470			56.0	
KW1-1201CWA	White	x=0.30, y=0.31			270.0	
KW1-1201ARA	Deep Red	630			40.0	Common Anode
KW1-1201AAA	Orange	605			48.0	
KW1-1201AGA	Yellow Green	572			20.0	
KW1-1201AGA-G5	Pure Green	525			248.0	
KW1-1201ABA	Blue	470			56.0	
KW1-1201AWA	White	x=0.30, y=0.31			270.0	

Part Number	Emitting Color	λd (nm) / x, y	Face Color	Luminous Intensity Iv (mcd)		Circuit Common
				IF=mA	Typ.	

1.50" Single Digit LED Display

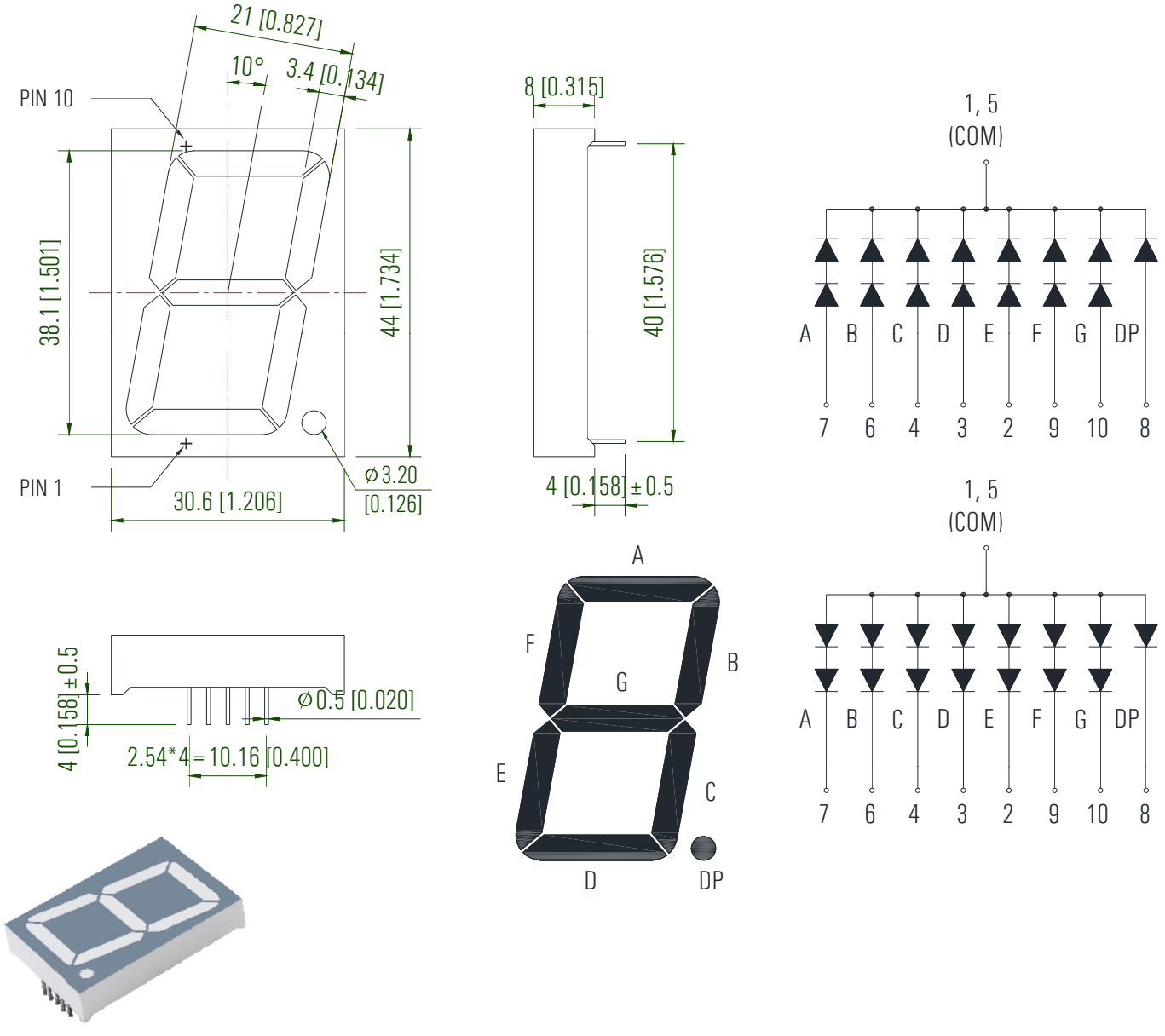

KW1-1501CRA	Deep Red	630	Gray	20	40.0	Common Cathode
KW1-1501CAA	Orange	605			48.0	
KW1-1501CGA	Yellow Green	572			20.0	
KW1-1501CGA-G5	Pure Green	525			248.0	
KW1-1501CBA	Blue	470			56.0	
KW1-1501CWA	White	x=0.30, y=0.31			270.0	
KW1-1501ARA	Deep Red	630			40.0	Common Anode
KW1-1501AAA	Orange	605			48.0	
KW1-1501AGA	Yellow Green	572			20.0	
KW1-1501AGA-G5	Pure Green	525			248.0	
KW1-1501ABA	Blue	470			56.0	
KW1-1501AWA	White	x=0.30, y=0.31			270.0	

Part Number	Emitting Color	λd (nm) / x, y	Face Color	Luminous Intensity Iv (mcd)		Circuit Common
				IF=mA	Typ.	

1.80" Single Digit LED Display

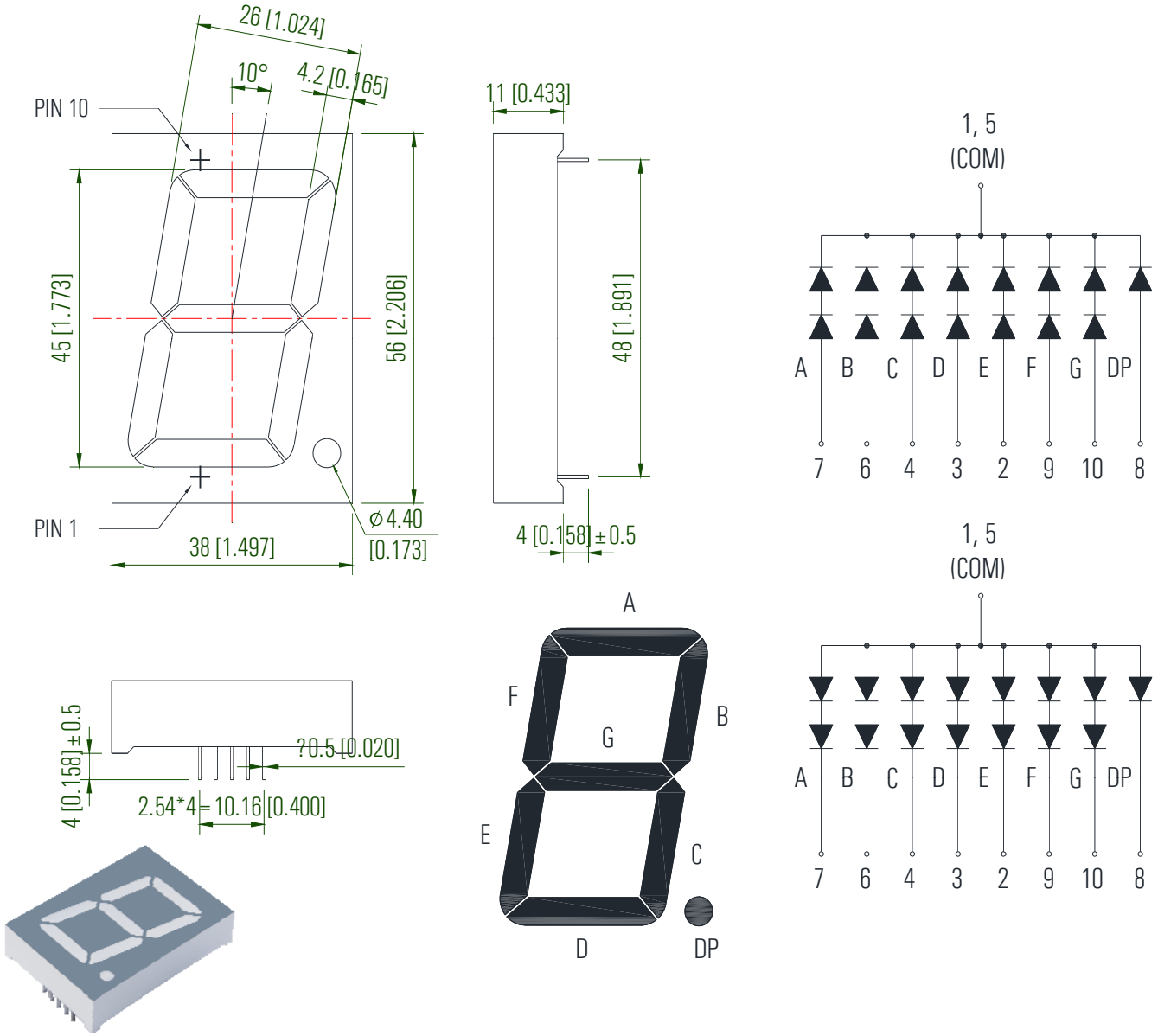

KW1-1808CRA	Deep Red	630	Gray	20	42.0	Common Cathode
KW1-1808CAA	Orange	605			52.0	
KW1-1808CGA	Yellow Green	572			24.0	
KW1-1808CGA-G5	Pure Green	525			250.0	
KW1-1808CBA	Blue	470			70.0	
KW1-1808CWA	White	x=0.30, y=0.31			280.0	
KW1-1808ARA	Deep Red	630			42.0	Common Anode
KW1-1808AAA	Orange	605			52.0	
KW1-1808AGA	Yellow Green	572			24.0	
KW1-1808AGA-G5	Pure Green	525			250.0	
KW1-1808ABA	Blue	470			70.0	
KW1-1808AWA	White	x=0.30, y=0.31			280.0	

Part Number	Emitting Color	λd (nm) / x, y	Face Color	Luminous Intensity Iv (mcd)		Circuit Common
				IF=mA	Typ.	

2.30" Single Digit LED Display

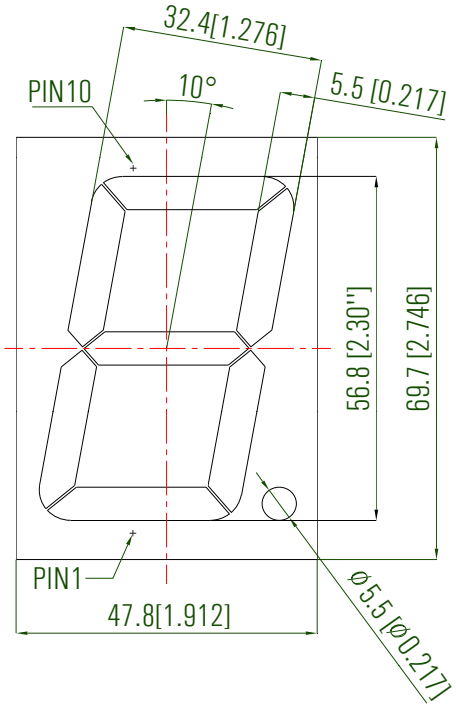

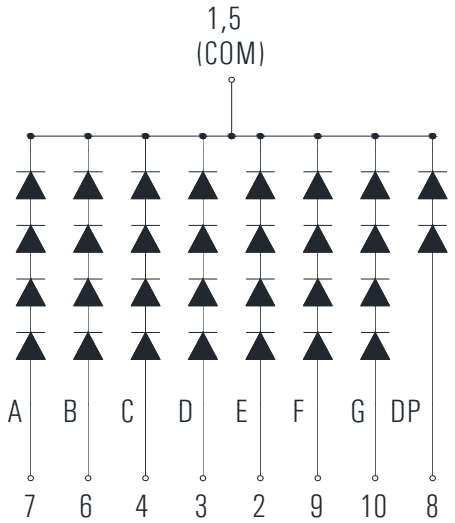

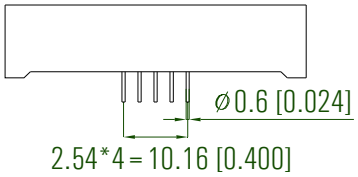

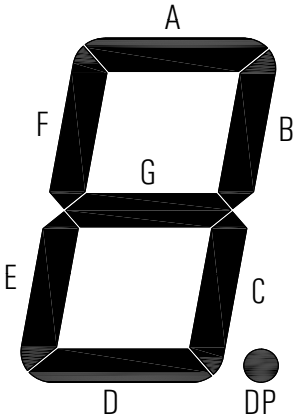

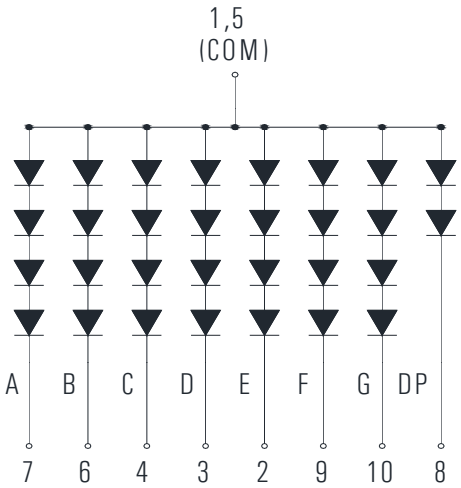

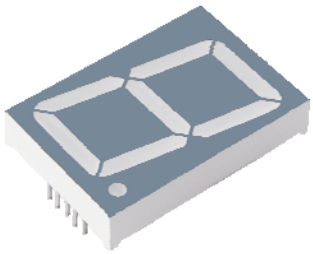

KW1-2301CRA	Deep Red	630	Gray	20	60.0	Common Cathode
KW1-2301CAA	Orange	605			58.0	
KW1-2301CGA	Yellow Green	572			26.0	
KW1-2301CGA-G5	Pure Green	525			260.0	
KW1-2301CBA	Blue	470			76.0	
KW1-2301CWA	White	x=0.30, y=0.31			290.0	
KW1-2301ARA	Deep Red	630			60.0	Common Anode
KW1-2301AAA	Orange	605			58.0	
KW1-2301AGA	Yellow Green	572			26.0	
KW1-2301AGA-G5	Pure Green	525			260.0	
KW1-2301ABA	Blue	470			76.0	
KW1-2301AWA	White	x=0.30, y=0.31			290.0	

Part Number	Emitting Color	λd (nm) / x, y	Face Color	Luminous Intensity Iv (mcd)		Circuit Common
				IF=mA	Typ.	

3.00" Single Digit LED Display

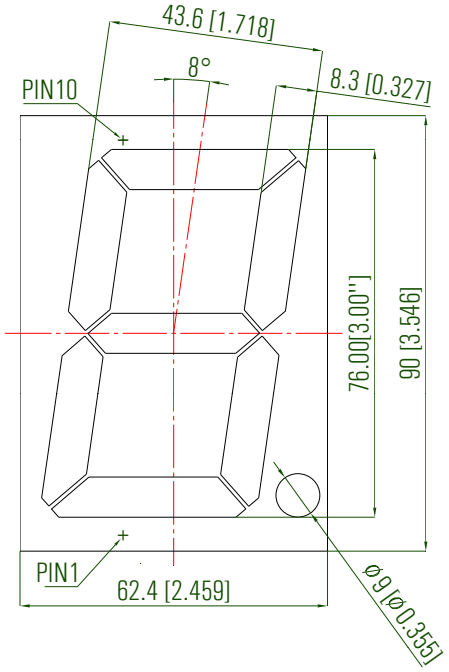

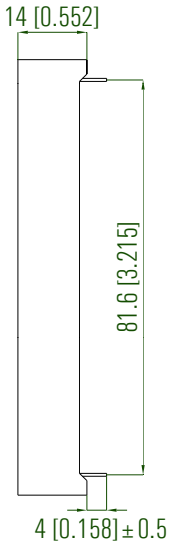

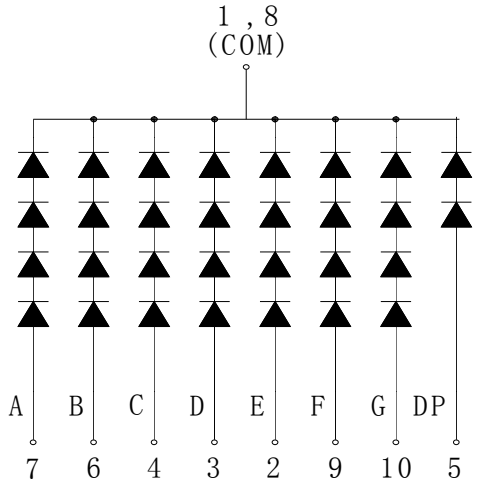

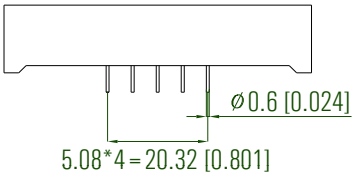

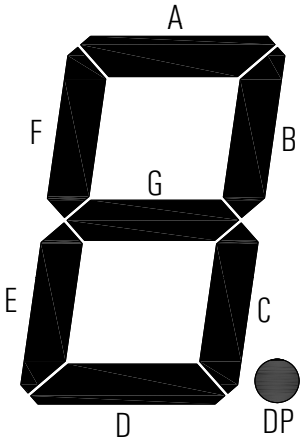

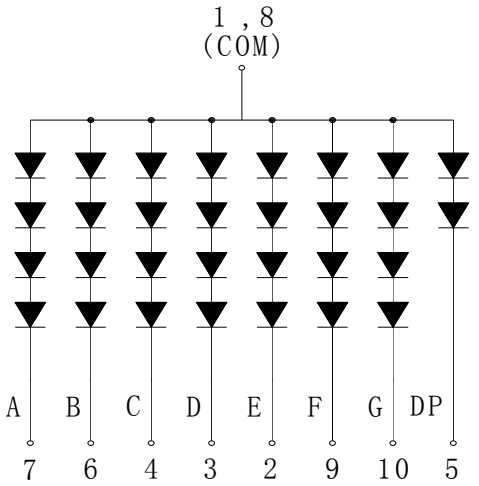

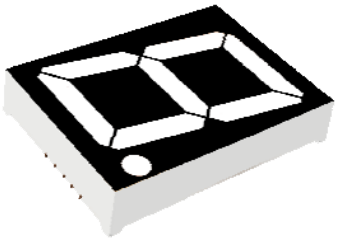

KW1-3003CRB	Deep Red	630	Black	20	64.0	Common Cathode
KW1-3003CAB	Orange	605			60.0	
KW1-3003CGB	Yellow Green	572			28.0	
KW1-3003CGB-G5	Pure Green	525			272.0	
KW1-3003CBB	Blue	470			80.0	
KW1-3003CWB	White	x=0.30, y=0.31			296.0	
KW1-3003ARB	Deep Red	630			64.0	Common Anode
KW1-3003AAB	Orange	605			60.0	
KW1-3003AGB	Yellow Green	572			28.0	
KW1-3003AGB-G5	Pure Green	525			272.0	
KW1-3003ABB	Blue	470			80.0	
KW1-3003AWB	White	x=0.30, y=0.31			296.0	

Part Number	Emitting Color	λd (nm) / x, y	Face Color	Luminous Intensity Iv (mcd)		Circuit Common
				IF=mA	Typ.	

4.00" Single Digit LED Display

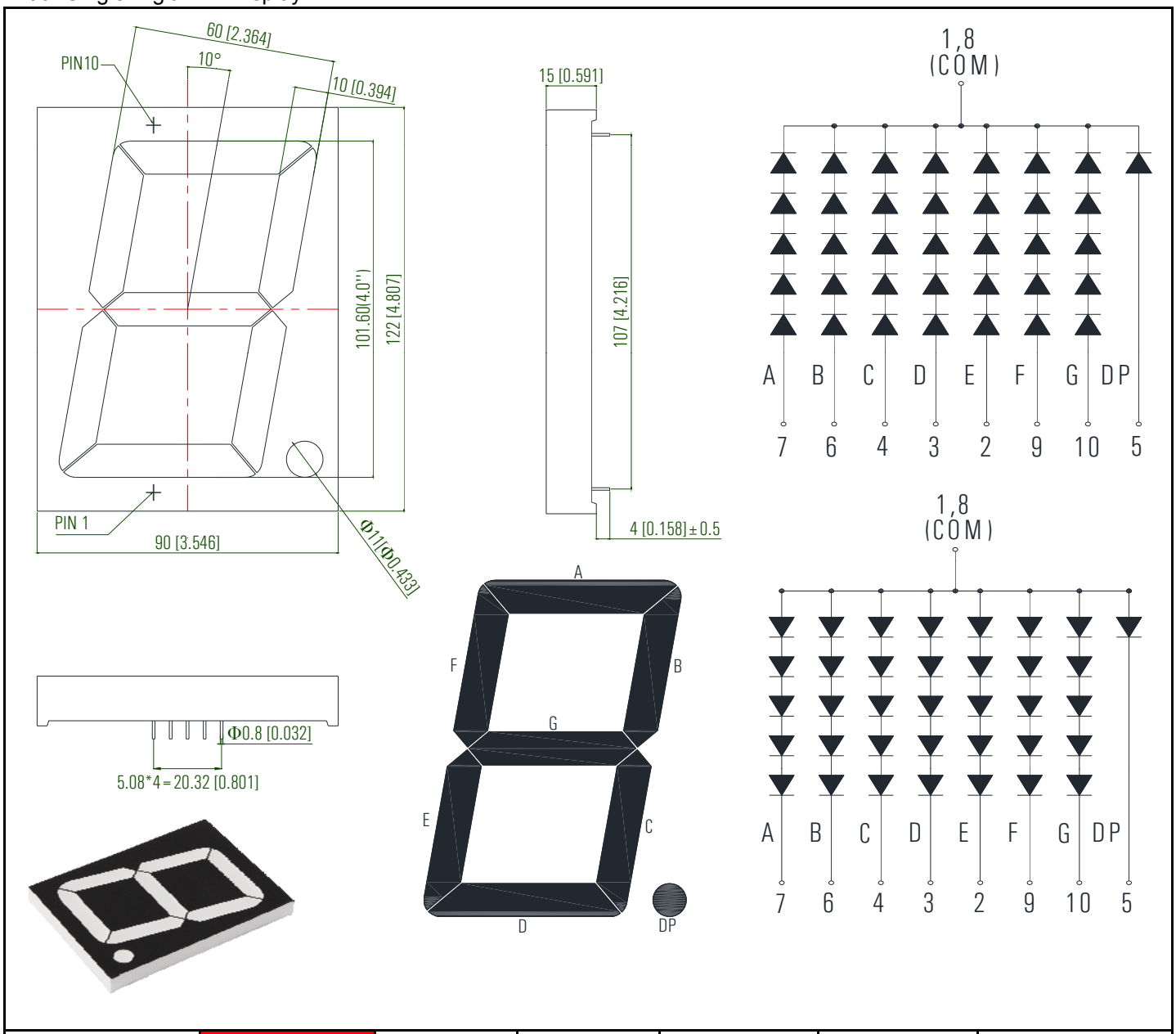

KW1-4001CRB	Deep Red	630	Black	20	62.0	Common Cathode
KW1-4001CAB	Orange	605			60.0	
KW1-4001CGB	Yellow Green	572			28.0	
KW1-4001CGB-G5	Pure Green	525			266.0	
KW1-4001CBB	Blue	470			80.0	
KW1-4001CWB	White	x=0.30, y=0.31			300.0	
KW1-4001ARB	Deep Red	630			62.0	Common Anode
KW1-4001AAB	Orange	605			60.0	
KW1-4001AGB	Yellow Green	572			28.0	
KW1-4001AGB-G5	Pure Green	525			266.0	
KW1-4001ABB	Blue	470			80.0	
KW1-4001AWB	White	x=0.30, y=0.31			300.0	

Part Number	Emitting Color	λd (nm) / x, y	Face Color	Luminous Intensity Iv (mcd)		Circuit Common
				IF=mA	Typ.	

0.28" Dual Digit LED Display

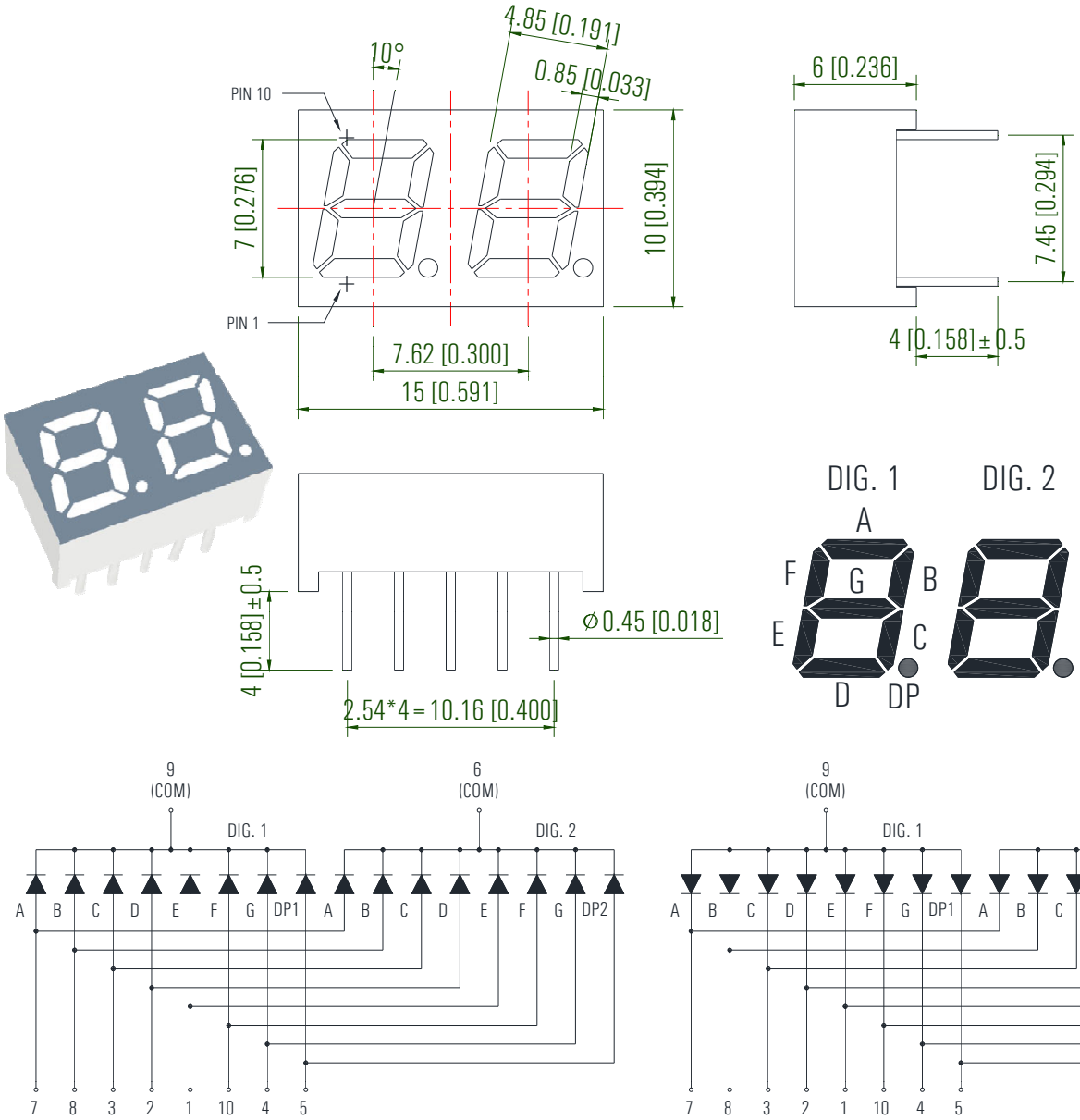

KW2-281CRA	Deep Red	630	Gray	20	22.0	Common Cathode
KW2-281CAA	Orange	605			30.0	
KW2-281CGA	Yellow Green	572			20.0	
KW2-281CGA-G5	Pure Green	525			80.0	
KW2-281CBA	Blue	470			44.0	
KW2-281CWA-Y	White	x=0.30, y=0.31			130.0	
KW2-281ARA	Deep Red	630			22.0	Common Anode
KW2-281AAA	Orange	605			30.0	
KW2-281AGA	Yellow Green	572			20.0	
KW2-281AGA-G5	Pure Green	525			80.0	
KW2-281ABA	Blue	470			44.0	
KW2-281AWA-Y	White	x=0.30, y=0.31			130.0	

Part Number	Emitting Color	λd (nm) / x, y	Face Color	Luminous Intensity Iv (mcd)		Circuit Common
				IF=mA	Typ.	

0.30" Dual Digit LED Display

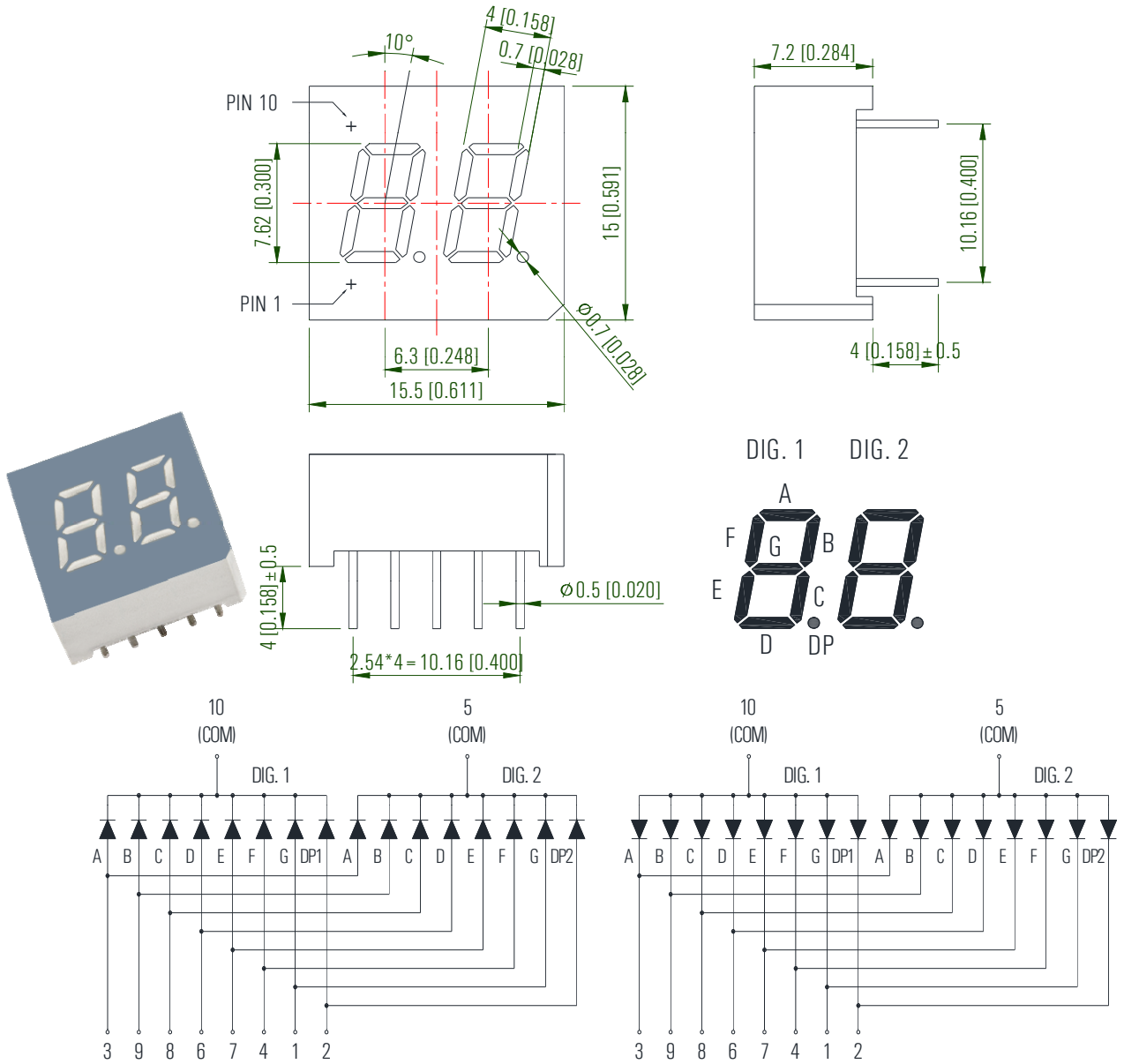

KW2-301CRA	Deep Red	630	Gray	20	24.0	Common Cathode
KW2-301CAA	Orange	605			32.0	
KW2-301CGA	Yellow Green	572			22.0	
KW2-301CGA-G5	Pure Green	525			84.0	
KW2-301CBA	Blue	470			46.0	
KW2-301CWA-Y	White	x=0.30, y=0.31			136.0	
KW2-301ARA	Deep Red	630			24.0	Common Anode
KW2-301AAA	Orange	605			32.0	
KW2-301AGA	Yellow Green	572			22.0	
KW2-301AGA-G5	Pure Green	525			84.0	
KW2-301ABA	Blue	470			46.0	
KW2-301AWA-Y	White	x=0.30, y=0.31			136.0	

Part Number	Emitting Color	λd (nm) / x, y	Face Color	Luminous Intensity Iv (mcd)		Circuit Common
				IF=mA	Typ.	

0.36" Dual Digit LED Display

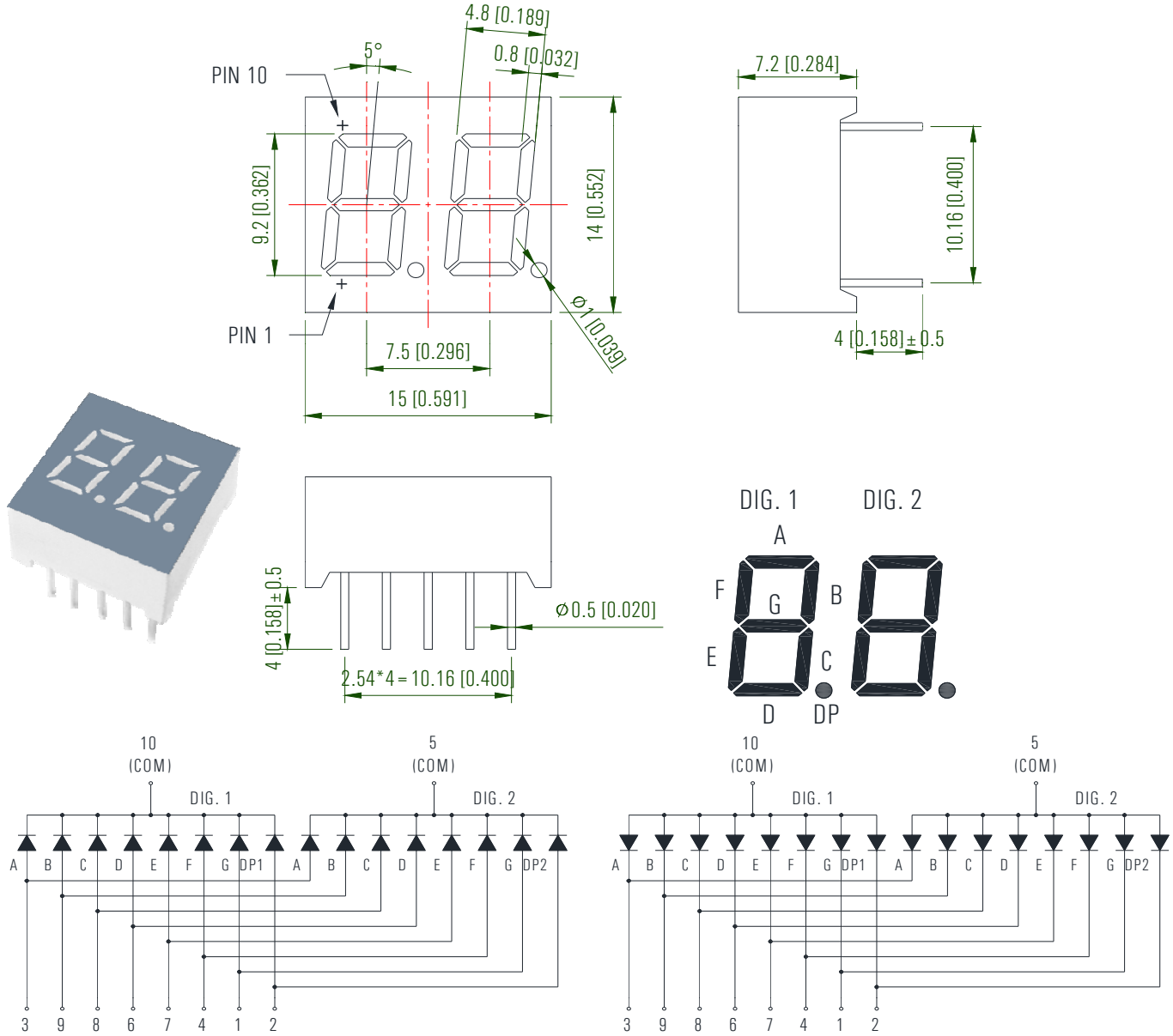

KW2-361CRA	Deep Red	630	Gray	20	25.0	Common Cathode
KW2-361CAA	Orange	605			32.0	
KW2-361CGA	Yellow Green	572			23.0	
KW2-361CGA-G5	Pure Green	525			86.0	
KW2-361CBA	Blue	470			46.0	
KW2-361CWA-Y	White	x=0.30, y=0.31			138.0	
KW2-361ARA	Deep Red	630			25.0	Common Anode
KW2-361AAA	Orange	605			32.0	
KW2-361AGA	Yellow Green	572			23.0	
KW2-361AGA-G5	Pure Green	525			86.0	
KW2-361ABA	Blue	470			46.0	
KW2-361AWA-Y	White	x=0.30, y=0.31			138.0	

Part Number	Emitting Color	λd (nm) / x, y	Face Color	Luminous Intensity Iv (mcd)		Circuit Common
				IF=mA	Typ.	

0.39" Dual Digit LED Display

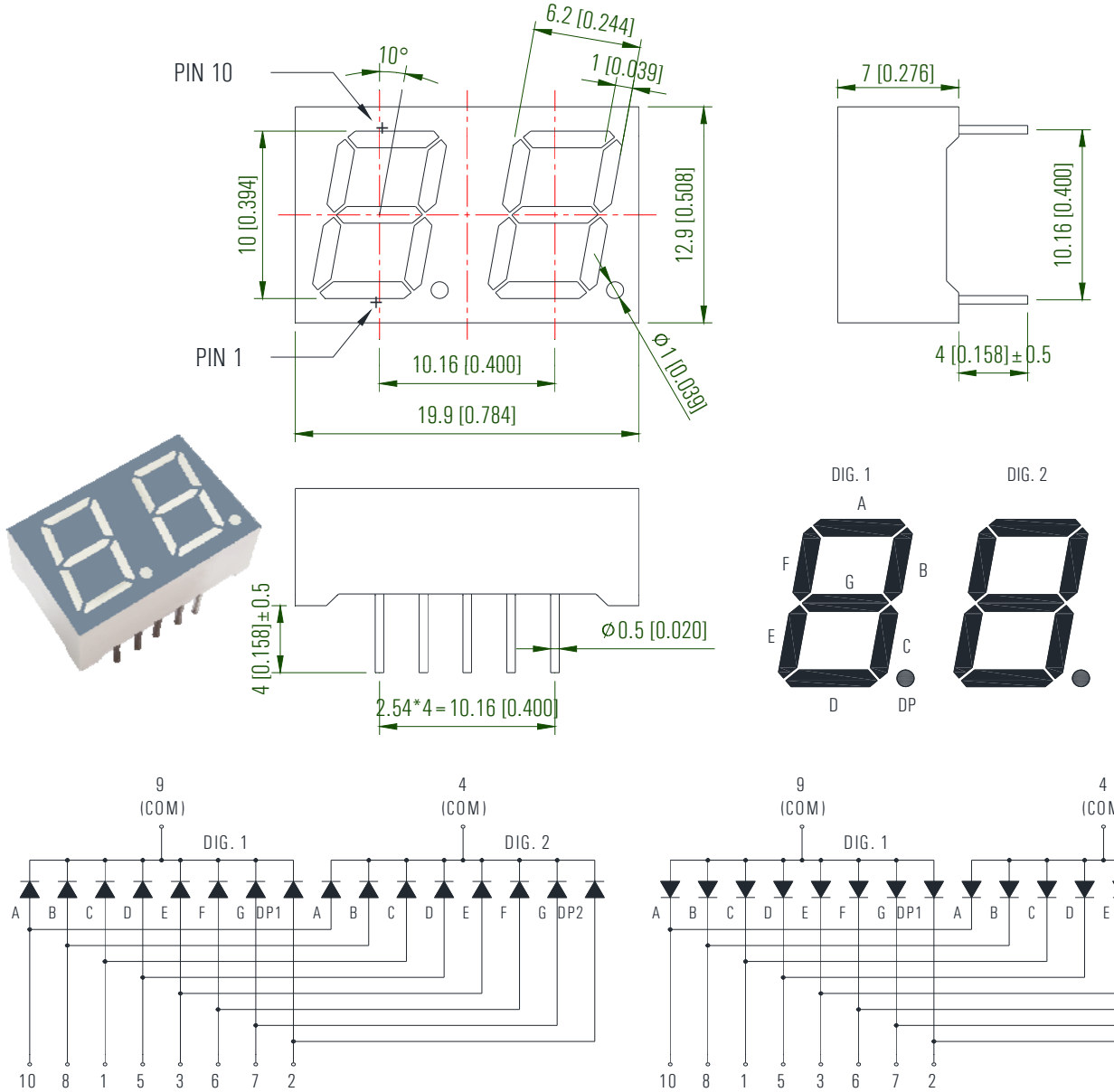

KW2-391CRA	Deep Red	630	Gray	20	26.0	Common Cathode
KW2-391CAA	Orange	605			32.0	
KW2-391CGA	Yellow Green	572			24.0	
KW2-391CGA-G5	Pure Green	525			88.0	
KW2-391CBA	Blue	470			47.0	
KW2-391CWA-Y	White	x=0.30, y=0.31			140.0	
KW2-391ARA	Deep Red	630			26.0	Common Anode
KW2-391AAA	Orange	605			32.0	
KW2-391AGA	Yellow Green	572			24.0	
KW2-391AGA-G5	Pure Green	525			88.0	
KW2-391ABA	Blue	470			47.0	
KW2-391AWA-Y	White	x=0.30, y=0.31			140.0	

Part Number	Emitting Color	λd (nm) / x, y	Face Color	Luminous Intensity Iv (mcd)		Circuit Common
				IF=mA	Typ.	

0.40" Dual Digit LED Display

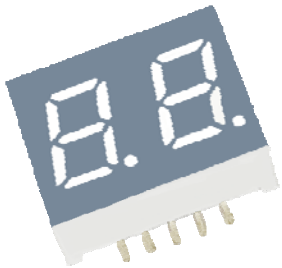

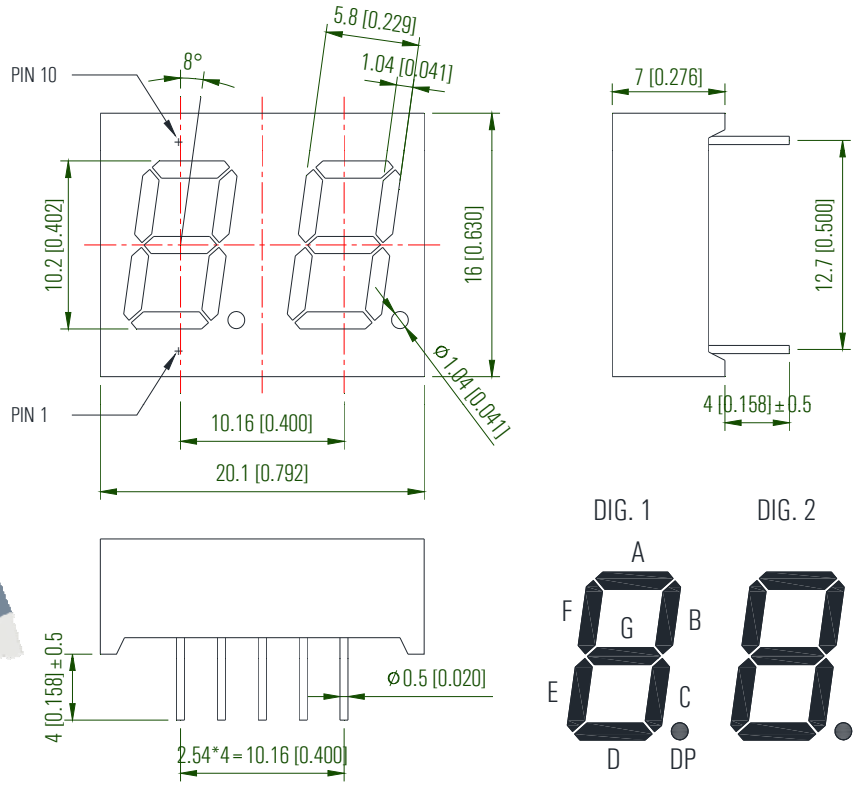

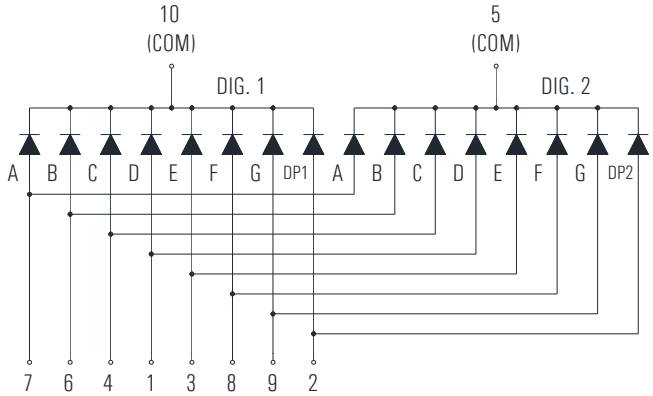

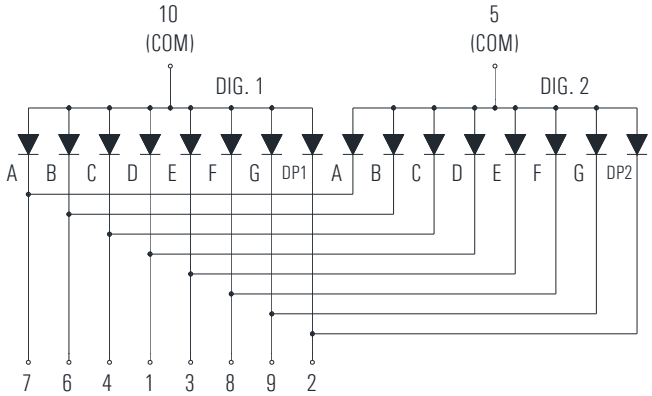

KW2-402CRA	Deep Red	630	Gray	20	28.0	Common Cathode
KW2-402CAA	Orange	605			32.0	
KW2-402CGA	Yellow Green	572			24.0	
KW2-402CGA-G5	Pure Green	525			90.0	
KW2-402CBA	Blue	470			47.0	
KW2-402CWA	White	x=0.27, y=0.28			100.0	
KW2-402ARA	Deep Red	630			28.0	Common Anode
KW2-402AAA	Orange	605			32.0	
KW2-402AGA	Yellow Green	572			24.0	
KW2-402AGA-G5	Pure Green	525			90.0	
KW2-402ABA	Blue	470			47.0	
KW2-402AWA	White	x=0.27, y=0.28			100.0	

Part Number	Emitting Color	λd (nm) / x, y	Face Color	Luminous Intensity Iv (mcd)		Circuit Common
				IF=mA	Typ.	

0.50" Dual Digit LED Display

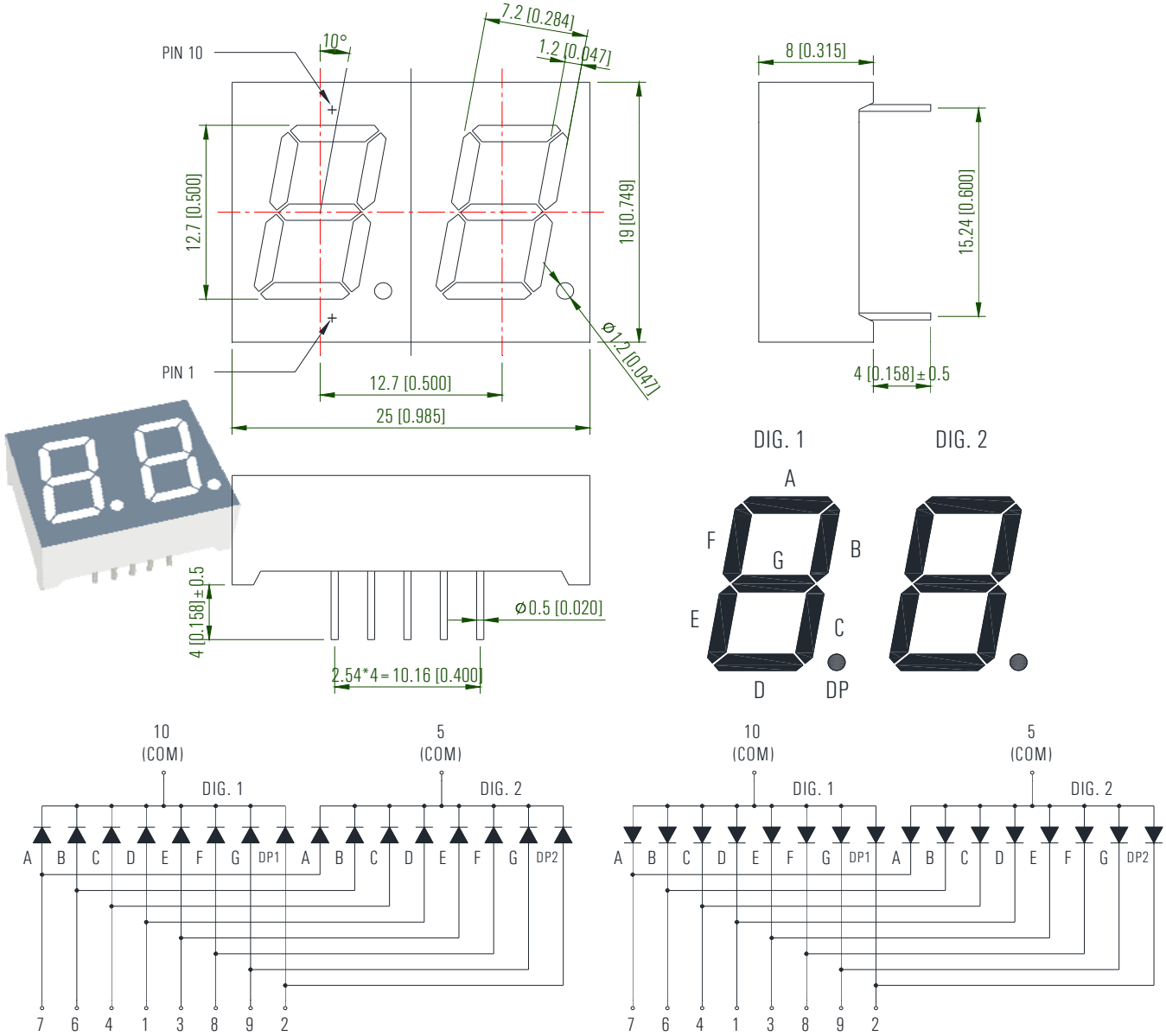

KW2-502CRA	Deep Red	630	Gray	20	30.0	Common Cathode
KW2-502CAA	Orange	605			34.0	
KW2-502CGA	Yellow Green	572			25.0	
KW2-502CGA-G5	Pure Green	525			92.0	
KW2-502CBA	Blue	470			50.0	
KW2-502CWA	White	x=0.30, y=0.31			260.0	
KW2-502ARA	Deep Red	630			30.0	Common Anode
KW2-502AAA	Orange	605			34.0	
KW2-502AGA	Yellow Green	572			25.0	
KW2-502AGA-G5	Pure Green	525			92.0	
KW2-502ABA	Blue	470			50.0	
KW2-502AWA	White	x=0.30, y=0.31			260.0	

Part Number	Emitting Color	λd (nm) / x, y	Face Color	Luminous Intensity Iv (mcd)		Circuit Common
				IF=mA	Typ.	

0.52" Dual Digit LED Display

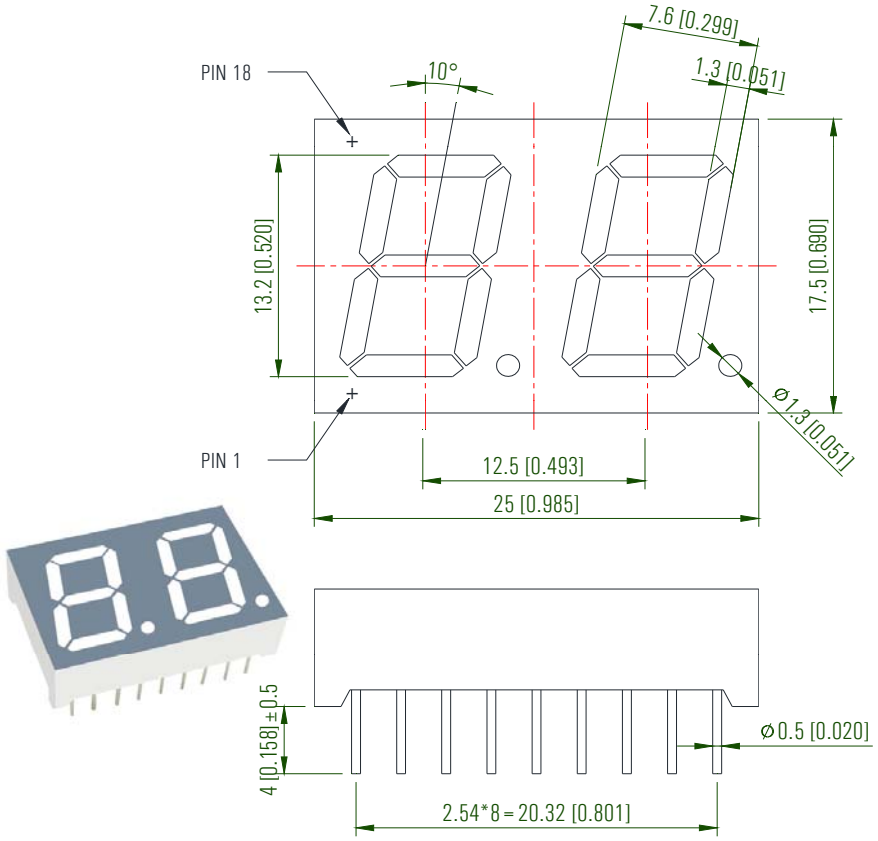

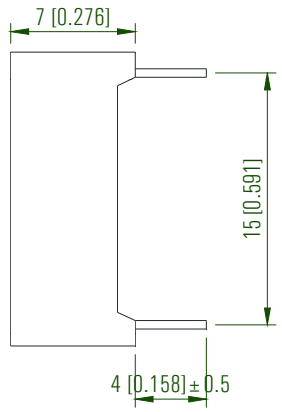

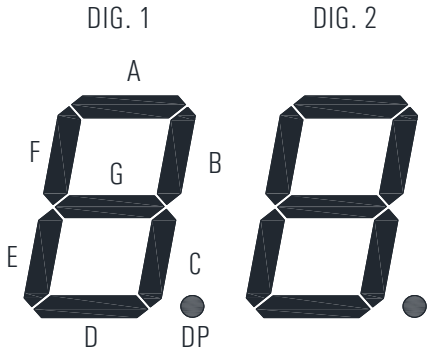

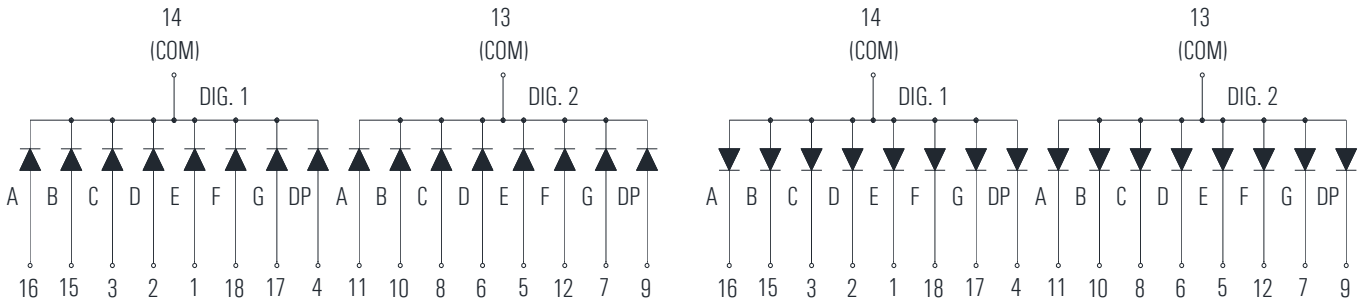

KW2-521CRA	Deep Red	630	Gray	20	30.0	Common Cathode
KW2-521CAA	Orange	605			34.0	
KW2-521CGA	Yellow Green	572			25.0	
KW2-521CGA-G5	Pure Green	525			92.0	
KW2-521CBA	Blue	470			50.0	
KW2-521CWA	White	x=0.30, y=0.31			260.0	
KW2-521ARA	Deep Red	630			30.0	Common Anode
KW2-521AAA	Orange	605			34.0	
KW2-521AGA	Yellow Green	572			25.0	
KW2-521AGA-G5	Pure Green	525			92.0	
KW2-521ABA	Blue	470			50.0	
KW2-521AWA	White	x=0.30, y=0.31			260.0	

Part Number	Emitting Color	λd (nm) / x, y	Face Color	Luminous Intensity Iv (mcd)		Circuit Common
				IF=mA	Typ.	

0.56" Dual Digit LED Display

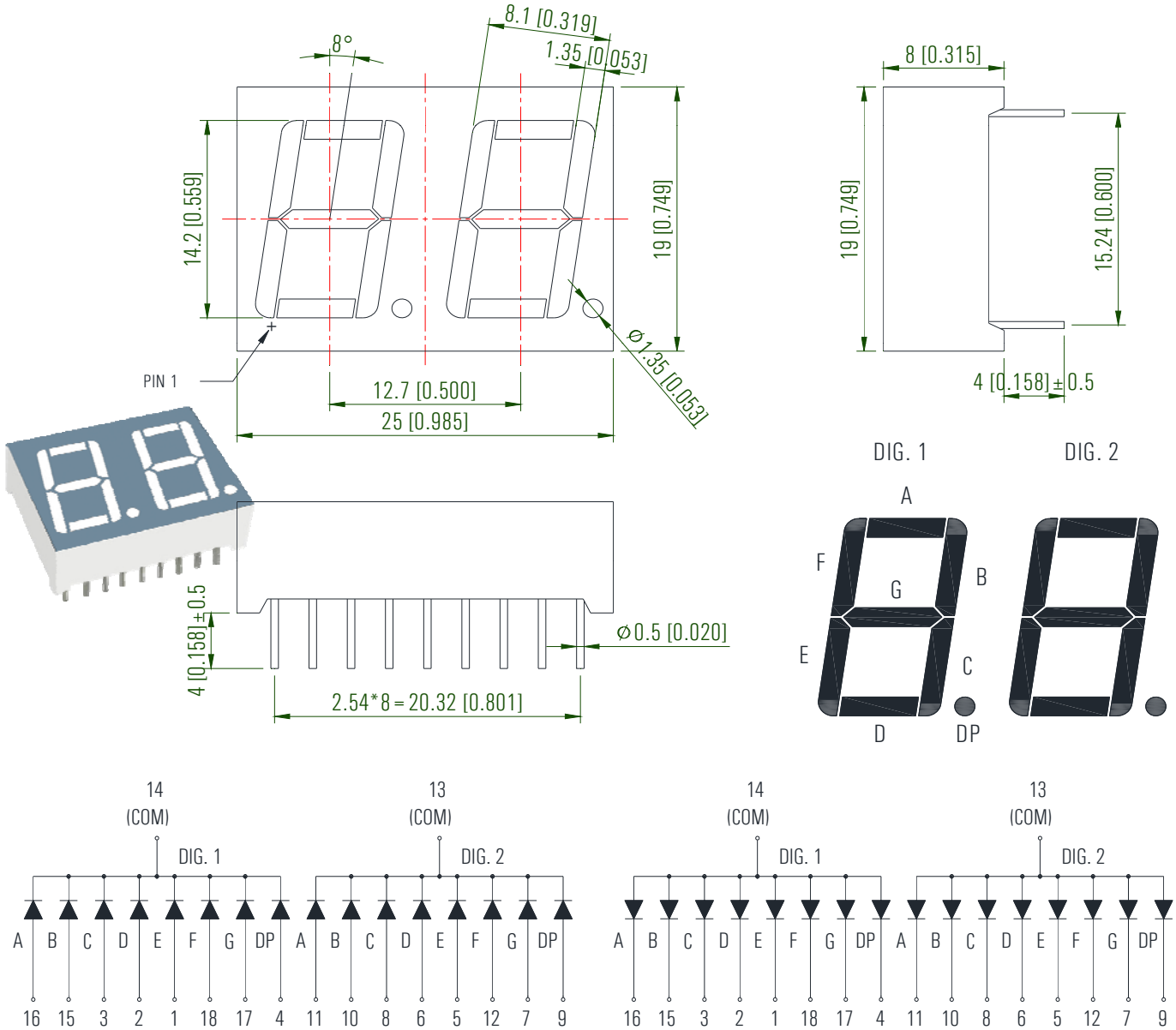

KW2-561CRA	Deep Red	630	Gray	20	30.0	Common Cathode
KW2-561CAA	Orange	605			34.0	
KW2-561CGA	Yellow Green	572			25.0	
KW2-561CGA-G5	Pure Green	525			92.0	
KW2-561CBA	Blue	470			50.0	
KW2-561CWA	White	x=0.30, y=0.31			260.0	
KW2-561ARA	Deep Red	630			30.0	Common Anode
KW2-561AAA	Orange	605			34.0	
KW2-561AGA	Yellow Green	572			25.0	
KW2-561AGA-G5	Pure Green	525			92.0	
KW2-561ABA	Blue	470			50.0	
KW2-561AWA	White	x=0.30, y=0.31			260.0	

Part Number	Emitting Color	λd (nm) / x, y	Face Color	Luminous Intensity Iv (mcd)		Circuit Common
				IF=mA	Typ.	

0.56" Dual Digit LED Display

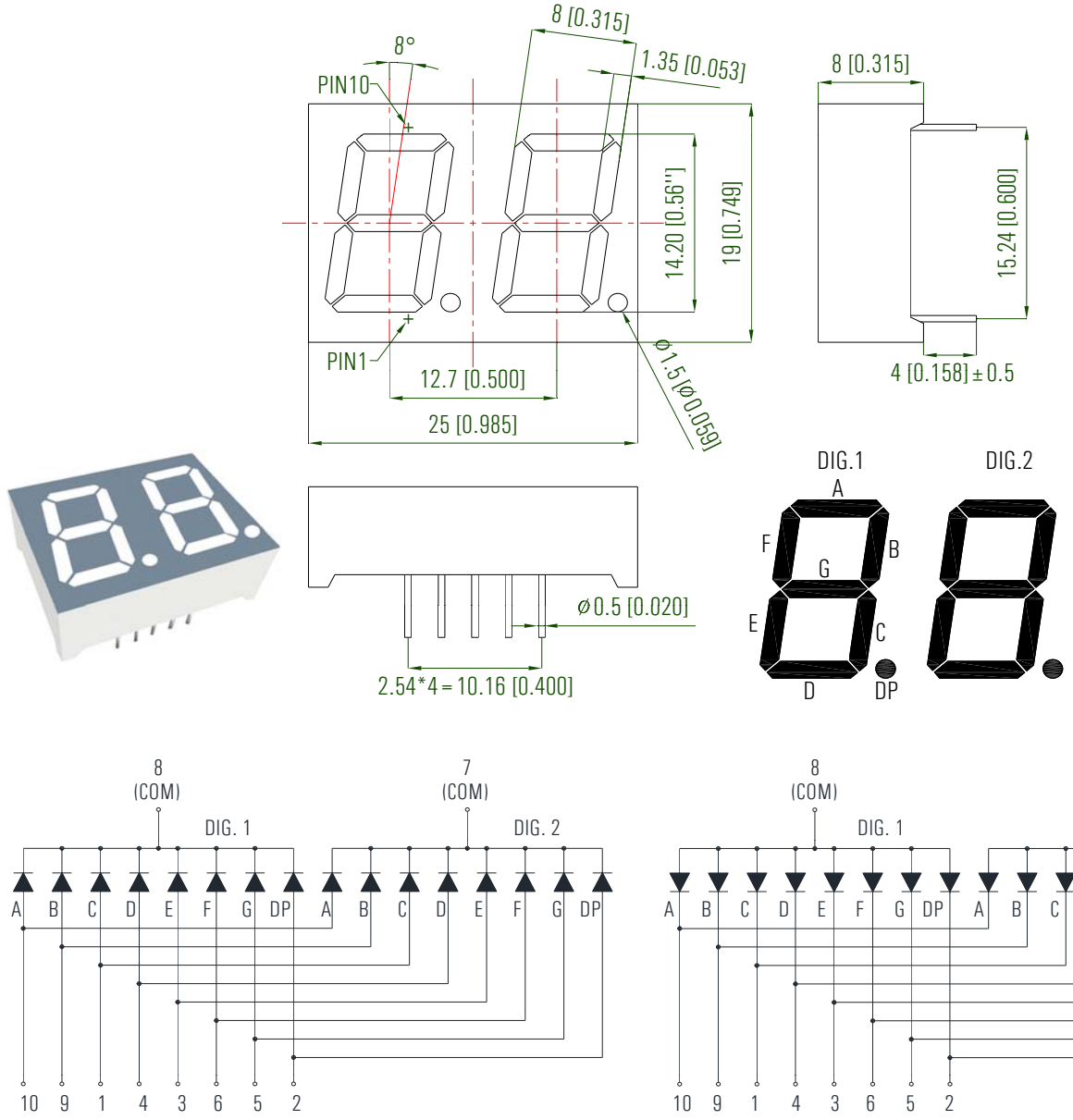

KW2-56BCRA	Deep Red	630	Gray	20	30.0	Common Cathode
KW2-56BCAA	Orange	605			34.0	
KW2-56BCGA	Yellow Green	572			25.0	
KW2-56BCGA-G5	Pure Green	525			92.0	
KW2-56BCBA	Blue	470			50.0	
KW2-56BCWA	White	x=0.30, y=0.31			260.0	
KW2-56BARA	Deep Red	630			30.0	Common Anode
KW2-56BAAA	Orange	605			34.0	
KW2-56BAGA	Yellow Green	572			25.0	
KW2-56BAGA-G5	Pure Green	525			92.0	
KW2-56BABA	Blue	470			50.0	
KW2-56BAWA	White	x=0.30, y=0.31			260.0	

Part Number	Emitting Color	λd (nm) / x, y	Face Color	Luminous Intensity Iv (mcd)		Circuit Common
				IF=mA	Typ.	

0.80" Dual Digit LED Display

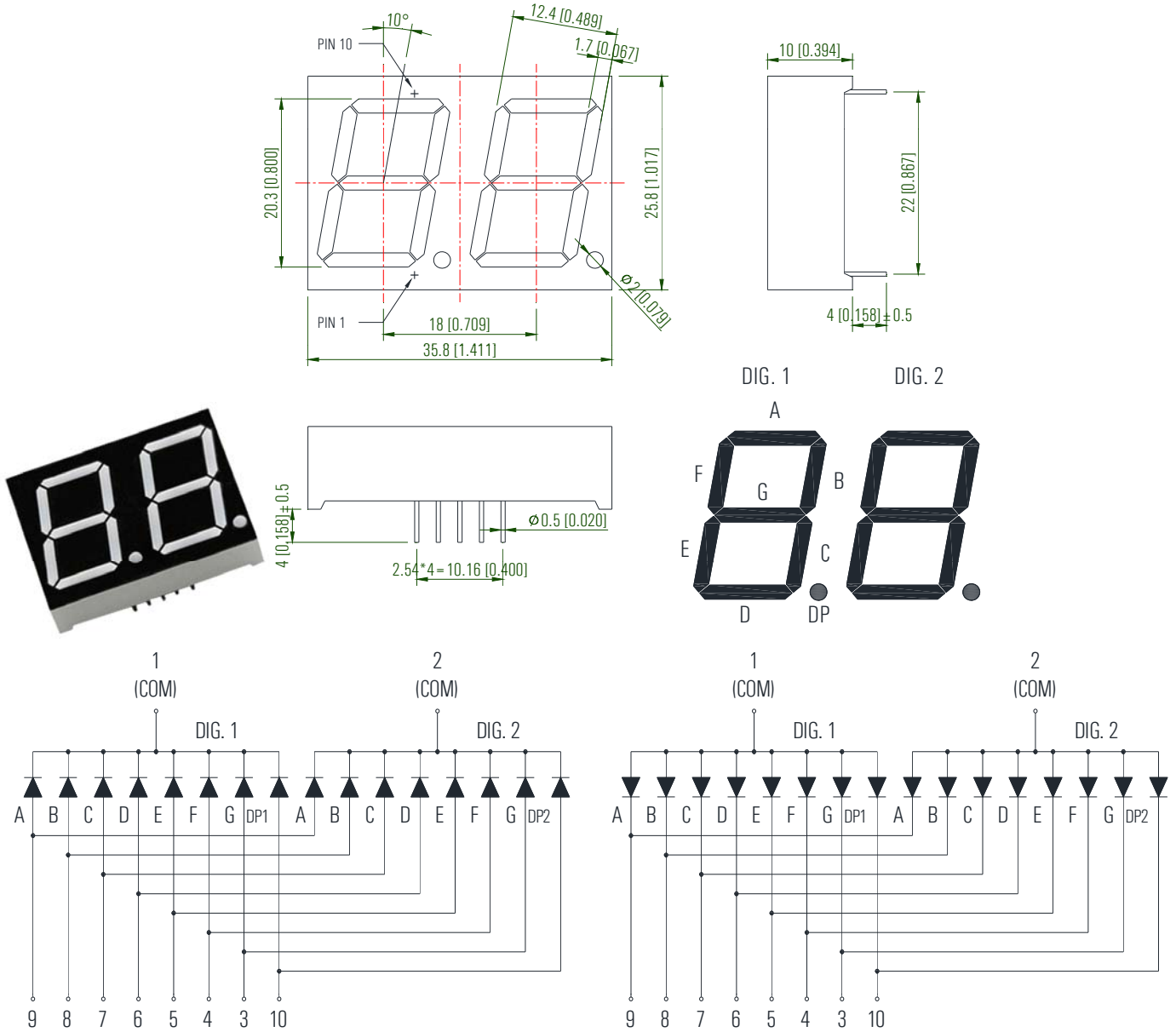

KW2-802CRB	Deep Red	630	Black	20	32.0	Common Cathode
KW2-802CAB	Orange	605			36.0	
KW2-802CGB	Yellow Green	572			26.0	
KW2-802CGB-G5	Pure Green	525			96.0	
KW2-802CBB	Blue	470			52.0	
KW2-802CWB	White	x=0.30, y=0.31			270.0	
KW2-802ARB	Deep Red	630			32.0	Common Anode
KW2-802AAB	Orange	605			36.0	
KW2-802AGB	Yellow Green	572			26.0	
KW2-802AGB-G5	Pure Green	525			96.0	
KW2-802ABB	Blue	470			52.0	
KW2-802AWB	White	x=0.30, y=0.31			270.0	

Part Number	Emitting Color	λd (nm) / x, y	Face Color	Luminous Intensity Iv (mcd)		Circuit Common
				IF=mA	Typ.	

0.25" Dual Half Digit LED Display

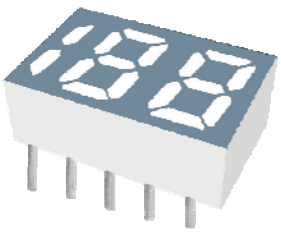

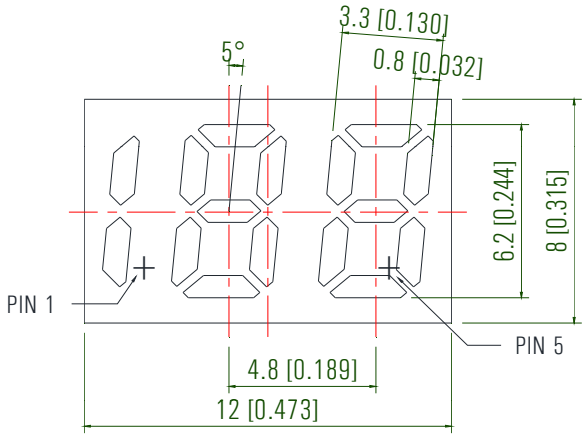

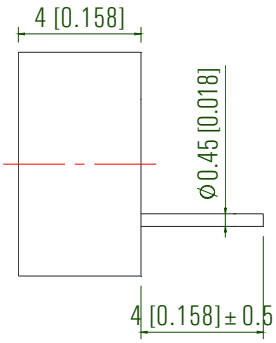

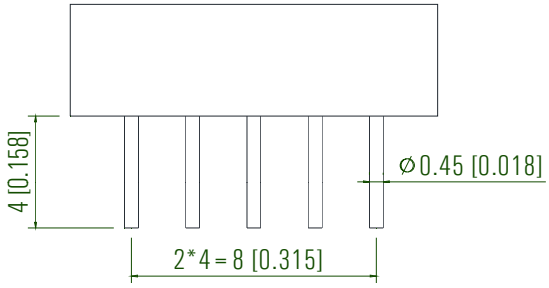

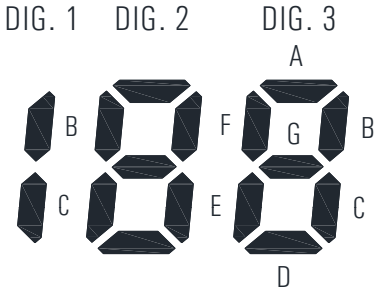

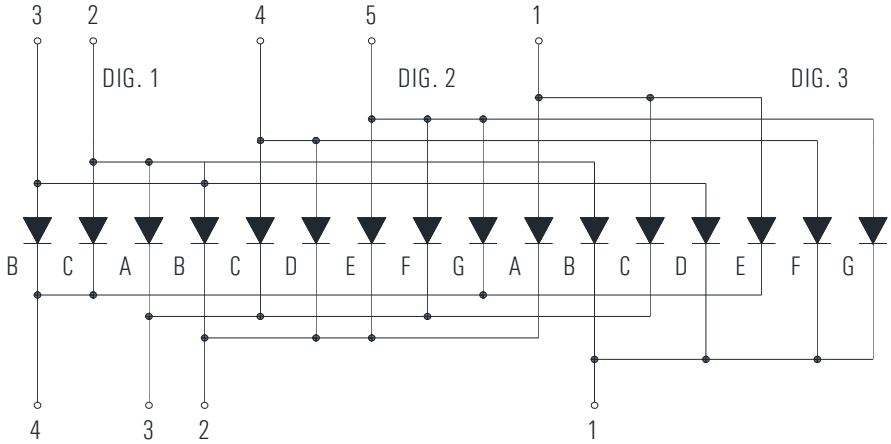

KWE-251CRA	Deep Red	630	Gray	20	22.0	Common Cathode
KWE-251CAA	Orange	605			24.0	
KWE-251CGA	Yellow Green	572			18.0	
KWE-251CGA-G5	Pure Green	525			70.0	
KWE-251CBA	Blue	470			38.0	
KWE-251CWA-Y	White	x=0.30, y=0.31			116.0	
KWE-251ARA	Deep Red	630			22.0	Common Anode
KWE-251AAA	Orange	605			24.0	
KWE-251AGA	Yellow Green	572			18.0	
KWE-251AGA-G5	Pure Green	525			70.0	
KWE-251ABA	Blue	470			38.0	
KWE-251AWA-Y	White	x=0.30, y=0.31			116.0	

Part Number	Emitting Color	λd (nm) / x, y	Face Color	Luminous Intensity Iv (mcd)		Circuit Common
				IF=mA	Typ.	

0.50" Dual Half Digit LED Display

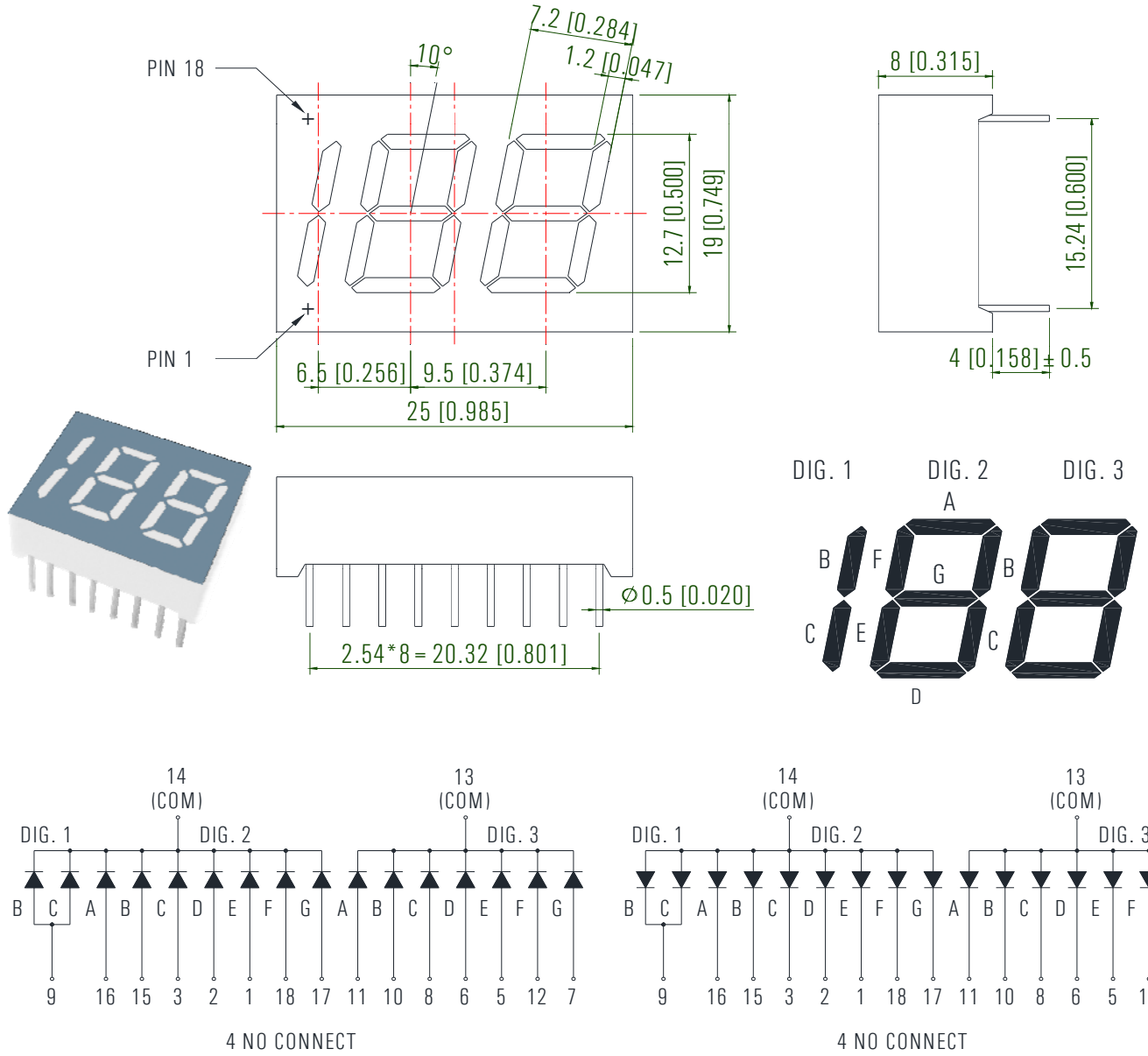

KWE-501CRA	Deep Red	630	Gray	20	30.0	Common Cathode
KWE-501CAA	Orange	605			34.0	
KWE-501CGA	Yellow Green	572			25.0	
KWE-501CGA-G5	Pure Green	525			92.0	
KWE-501CBA	Blue	470			50.0	
KWE-501CWA	White	x=0.30, y=0.31			260.0	
KWE-501ARA	Deep Red	630			30.0	Common Anode
KWE-501AAA	Orange	605			34.0	
KWE-501AGA	Yellow Green	572			25.0	
KWE-501AGA-G5	Pure Green	525			92.0	
KWE-501ABA	Blue	470			50.0	
KWE-501AWA	White	x=0.30, y=0.31			260.0	

Part Number	Emitting Color	λd (nm) / x, y	Face Color	Luminous Intensity Iv (mcd)		Circuit Common
				IF=mA	Typ.	

0.25" Three Digit LED Display

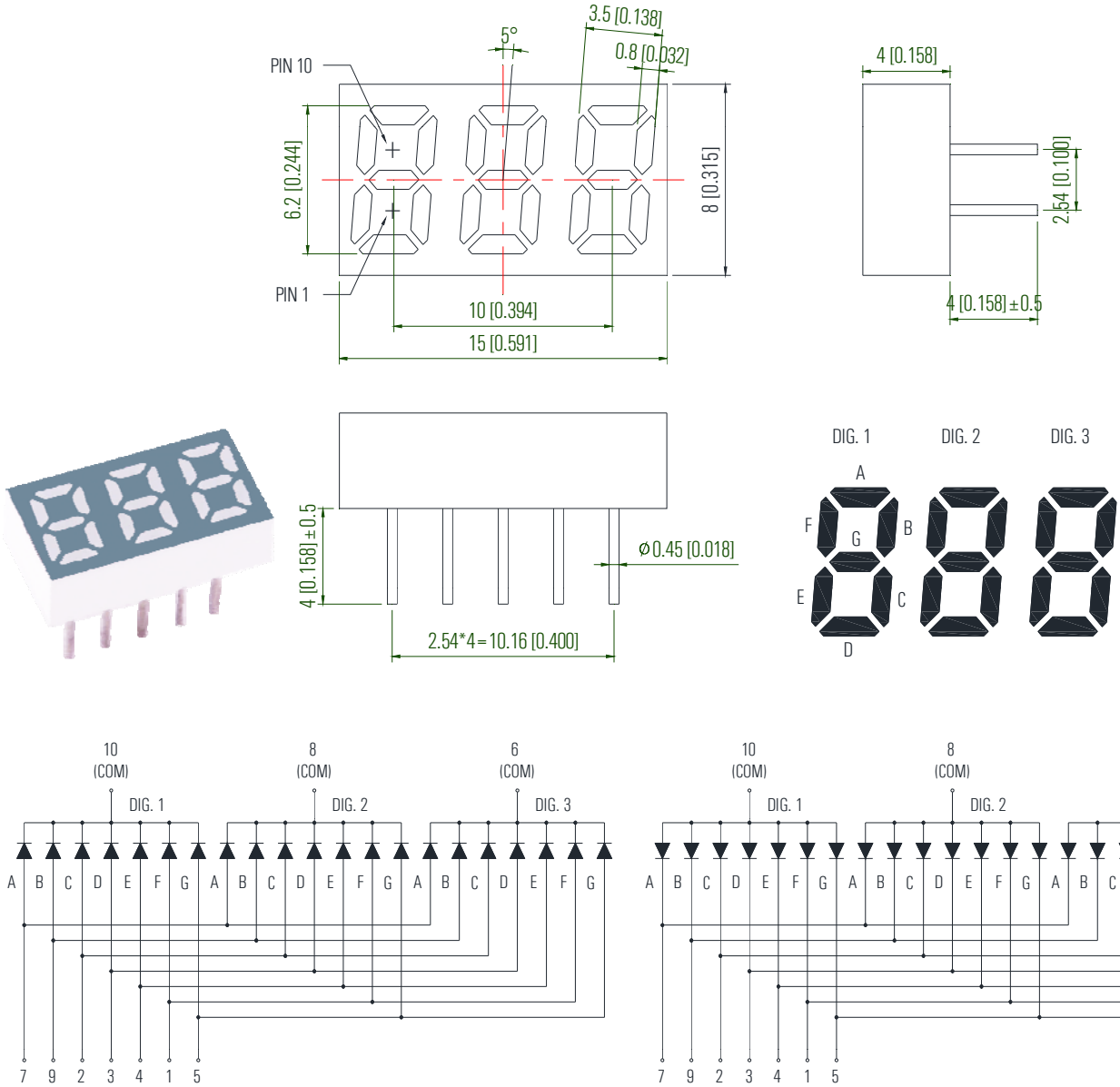

KW3-251CRA	Deep Red	630	Gray	20	22.0	Common Cathode
KW3-251CAA	Orange	605			24.0	
KW3-251CGA	Yellow Green	572			18.0	
KW3-251CGA-G5	Pure Green	525			70.0	
KW3-251CBA	Blue	470			38.0	
KW3-251CWA-Y	White	x=0.30, y=0.31			116.0	
KW3-251ARA	Deep Red	630			22.0	Common Anode
KW3-251AAA	Orange	605			24.0	
KW3-251AGA	Yellow Green	572			18.0	
KW3-251AGA-G5	Pure Green	525			70.0	
KW3-251ABA	Blue	470			38.0	
KW3-251AWA-Y	White	x=0.30, y=0.31			116.0	

Part Number	Emitting Color	λd (nm) / x, y	Face Color	Luminous Intensity Iv (mcd)		Circuit Common
				IF=mA	Typ.	

0.28" Three Digit LED Display

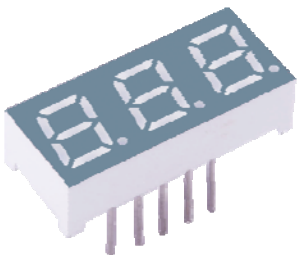

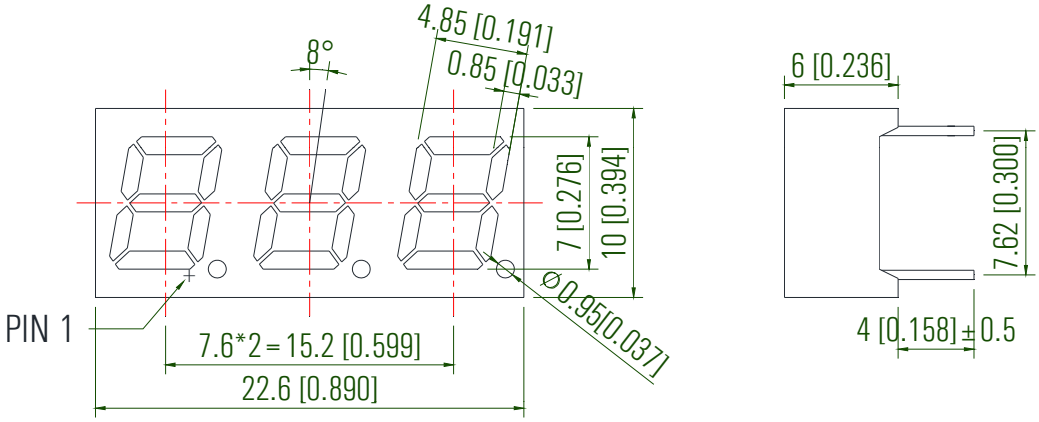

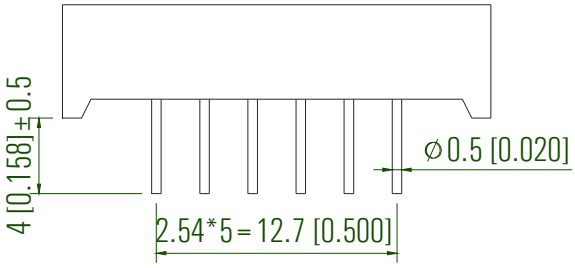

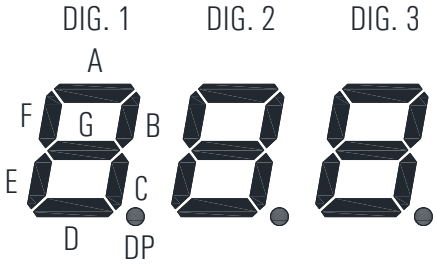

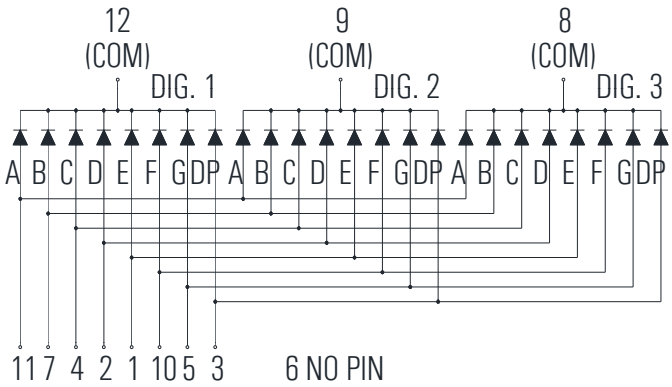

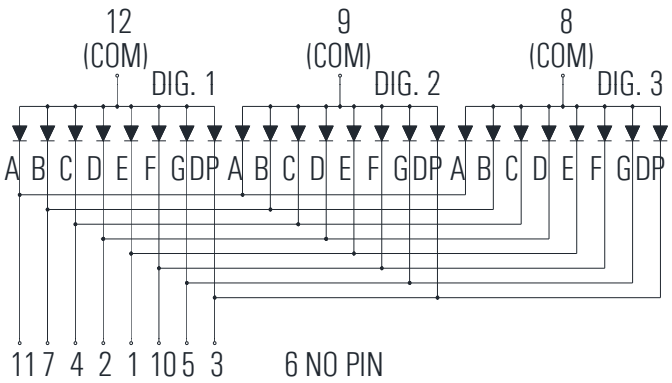

KW3-281CRA	Deep Red	630	Gray	20	22.0	Common Cathode
KW3-281CAA	Orange	605			30.0	
KW3-281CGA	Yellow Green	572			20.0	
KW3-281CGA-G5	Pure Green	525			80.0	
KW3-281CBA	Blue	470			44.0	
KW3-281CWA-Y	White	x=0.30, y=0.31			130.0	
KW3-281ARA	Deep Red	630			22.0	Common Anode
KW3-281AAA	Orange	605			30.0	
KW3-281AGA	Yellow Green	572			20.0	
KW3-281AGA-G5	Pure Green	525			80.0	
KW3-281ABA	Blue	470			44.0	
KW3-281AWA-Y	White	x=0.30, y=0.31			130.0	

Part Number	Emitting Color	λd (nm) / x, y	Face Color	Luminous Intensity Iv (mcd)		Circuit Common
				IF=mA	Typ.	

0.31" Three Digit LED Display

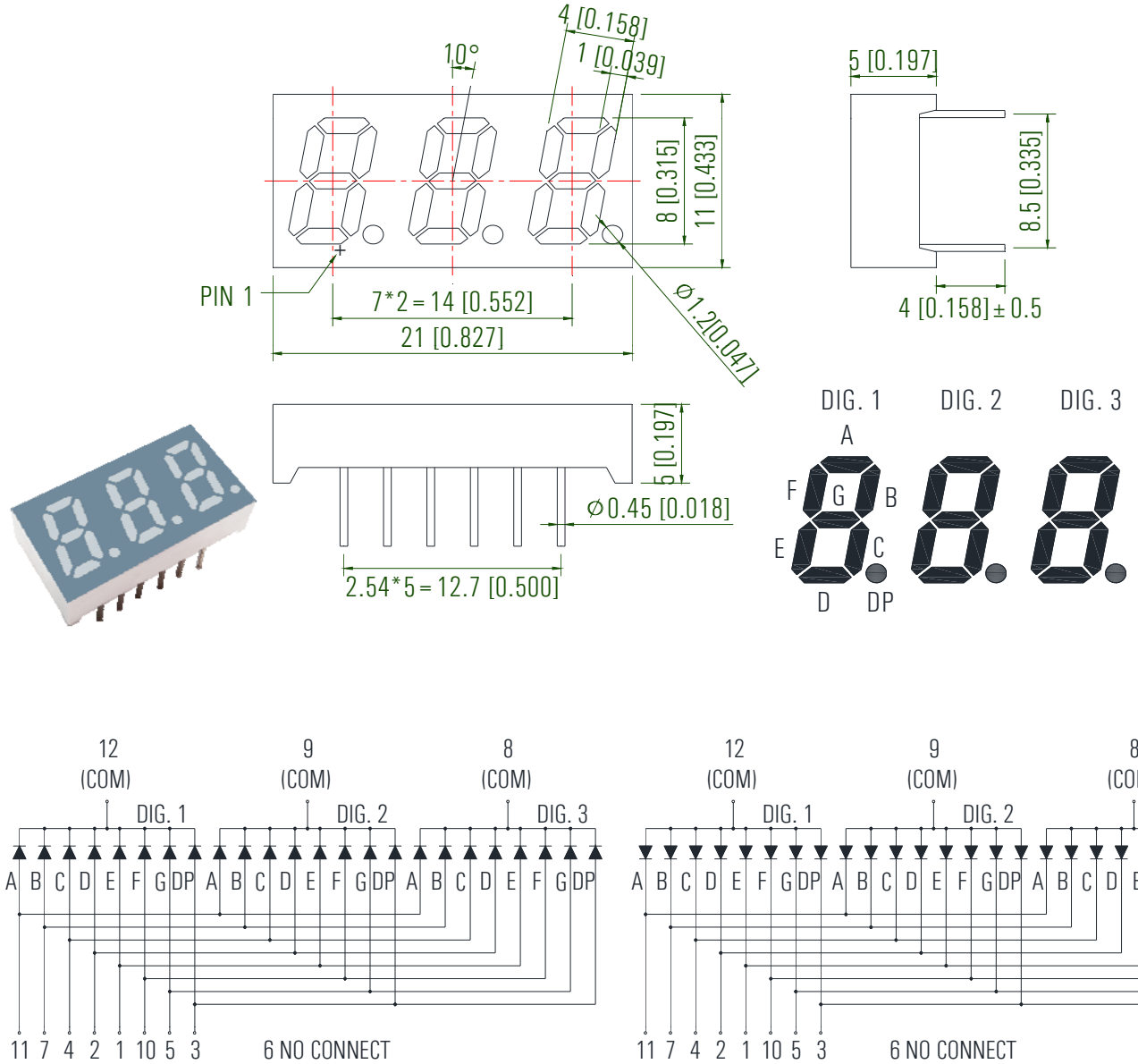

KW3-304CRA	Deep Red	630	Gray	20	24.0	Common Cathode
KW3-304CAA	Orange	605			32.0	
KW3-304CGA	Yellow Green	572			22.0	
KW3-304CGA-G5	Pure Green	525			84.0	
KW3-304CBA	Blue	470			46.0	
KW3-304CWA-Y	White	x=0.30, y=0.31			136.0	
KW3-304ARA	Deep Red	630			24.0	Common Anode
KW3-304AAA	Orange	605			32.0	
KW3-304AGA	Yellow Green	572			22.0	
KW3-304AGA-G5	Pure Green	525			84.0	
KW3-304ABA	Blue	470			46.0	
KW3-304AWA-Y	White	x=0.30, y=0.31			136.0	

Part Number	Emitting Color	λd (nm) / x, y	Face Color	Luminous Intensity Iv (mcd)		Circuit Common
				IF=mA	Typ.	

0.36" Three Digit LED Display

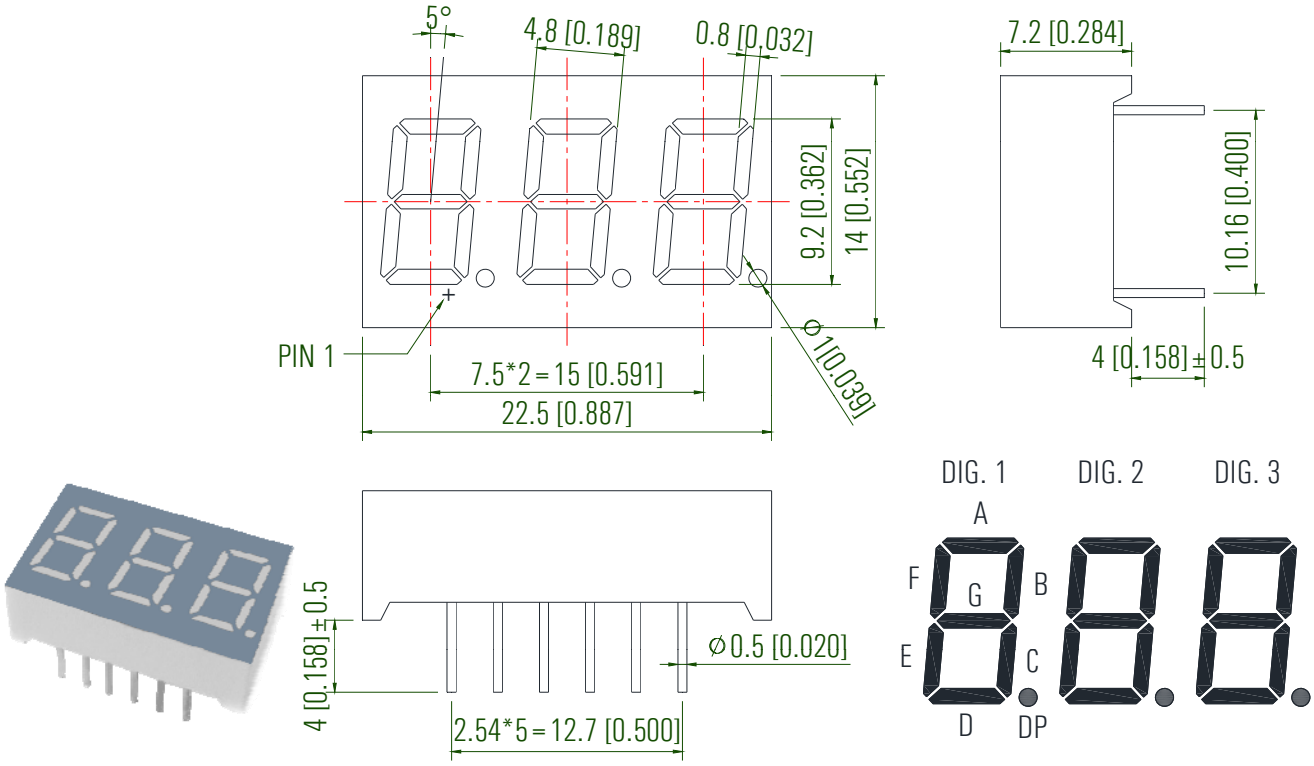

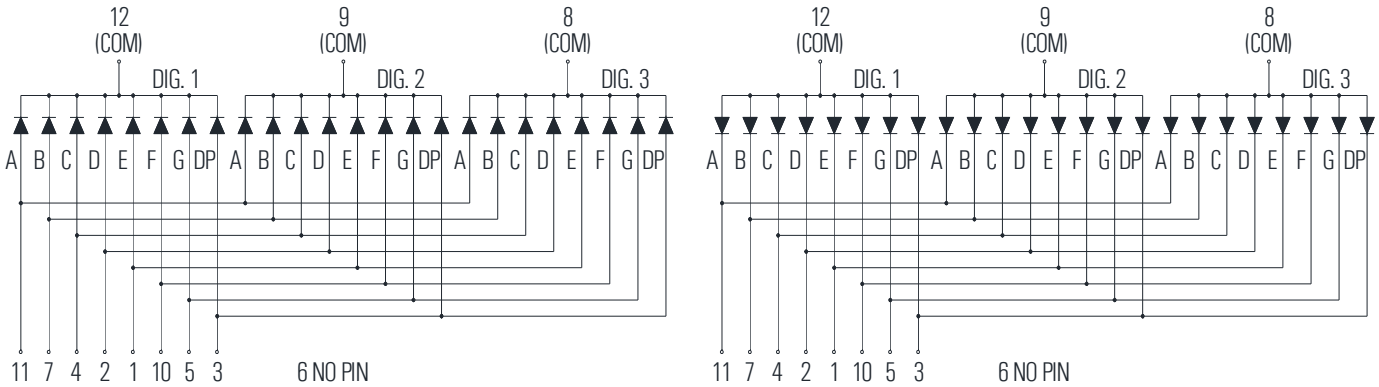

KW3-361CRA	Deep Red	630	Gray	20	25.0	Common Cathode
KW3-361CAA	Orange	605			32.0	
KW3-361CGA	Yellow Green	572			23.0	
KW3-361CGA-G5	Pure Green	525			86.0	
KW3-361CBA	Blue	470			46.0	
KW3-361CWA-Y	White	x=0.30, y=0.31			138.0	
KW3-361ARA	Deep Red	630			25.0	Common Anode
KW3-361AAA	Orange	605			32.0	
KW3-361AGA	Yellow Green	572			23.0	
KW3-361AGA-G5	Pure Green	525			86.0	
KW3-361ABA	Blue	470			46.0	
KW3-361AWA-Y	White	x=0.30, y=0.31			138.0	

Part Number	Emitting Color	λd (nm) / x, y	Face Color	Luminous Intensity Iv (mcd)		Circuit Common
				IF=mA	Typ.	

0.39" Three Digit LED Display

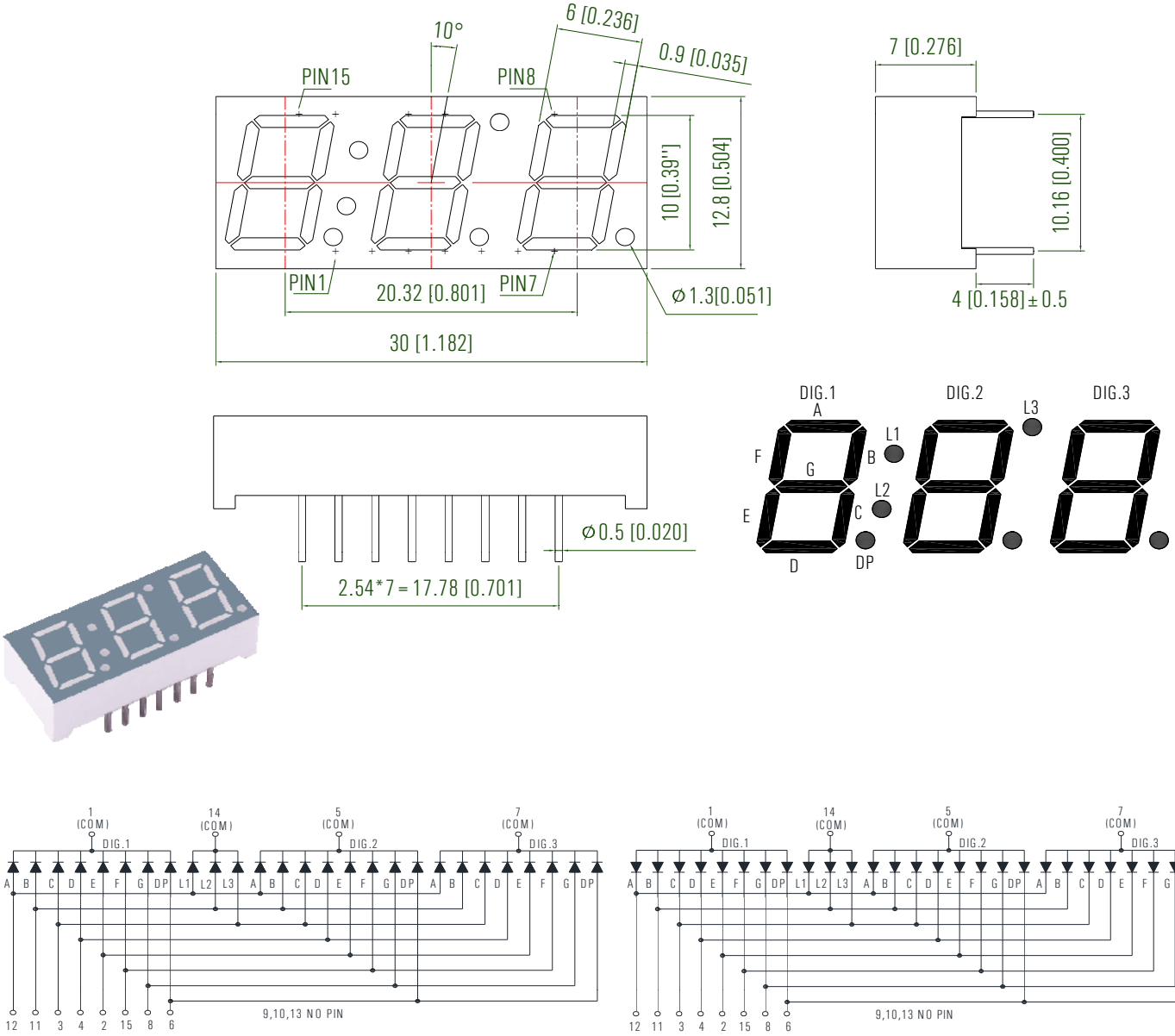

KW3-392CRA	Deep Red	630	Gray	20	26.0	Common Cathode
KW3-392CAA	Orange	605			32.0	
KW3-392CGA	Yellow Green	572			24.0	
KW3-392CGA-G5	Pure Green	525			88.0	
KW3-392CBA	Blue	470			47.0	
KW3-392CWA-Y	White	x=0.30, y=0.31			140.0	
KW3-392ARA	Deep Red	630			26.0	Common Anode
KW3-392AAA	Orange	605			32.0	
KW3-392AGA	Yellow Green	572			24.0	
KW3-392AGA-G5	Pure Green	525			88.0	
KW3-392ABA	Blue	470			47.0	
KW3-392AWA-Y	White	x=0.30, y=0.31			140.0	

Part Number	Emitting Color	λd (nm) / x, y	Face Color	Luminous Intensity Iv (mcd)		Circuit Common
				IF=mA	Typ.	

0.40" Triple Digit LED Display

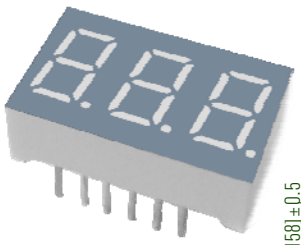

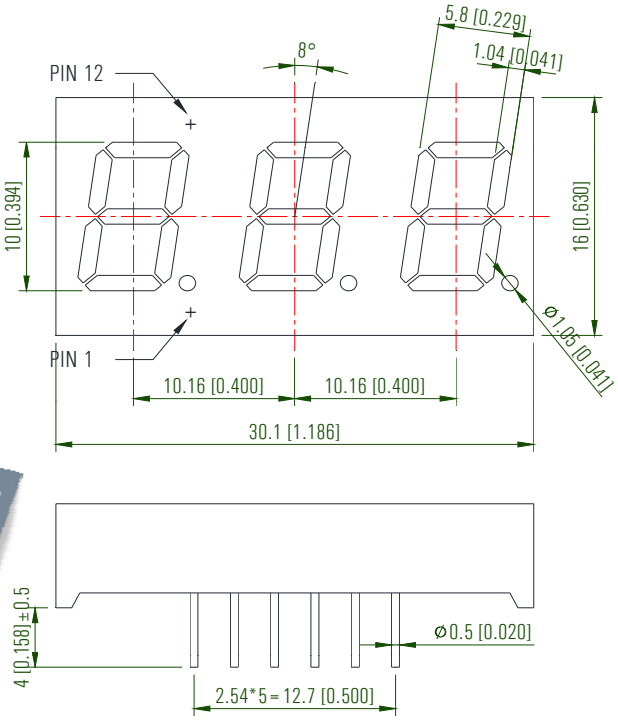

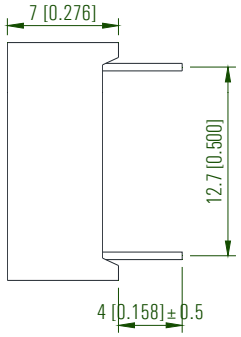

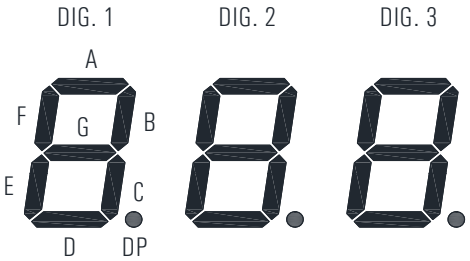

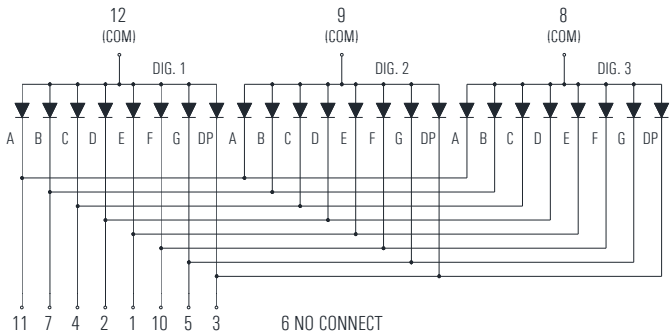

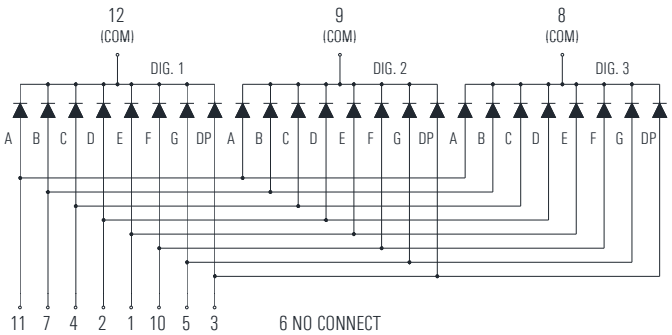

KW3-401CRA	Deep Red	630	Gray	20	30.0	Common Cathode
KW3-401CAA	Orange	605			34.0	
KW3-401CGA	Yellow Green	572			24.0	
KW3-401CGA-G5	Pure Green	525			90.0	
KW3-401CBA	Blue	470			47.0	
KW3-401CWA	White	x=0.27, y=0.28			140.0	
KW3-401ARA	Deep Red	630			30.0	Common Anode
KW3-401AAA	Orange	605			34.0	
KW3-401AGA	Yellow Green	572			24.0	
KW3-401AGA-G5	Pure Green	525			90.0	
KW3-401ABA	Blue	470			47.0	
KW3-401AWA	White	x=0.27, y=0.28			140.0	

Part Number	Emitting Color	λd (nm) / x, y	Face Color	Luminous Intensity Iv (mcd)		Circuit Common
				IF=mA	Typ.	

0.52" Triple Digit LED Display

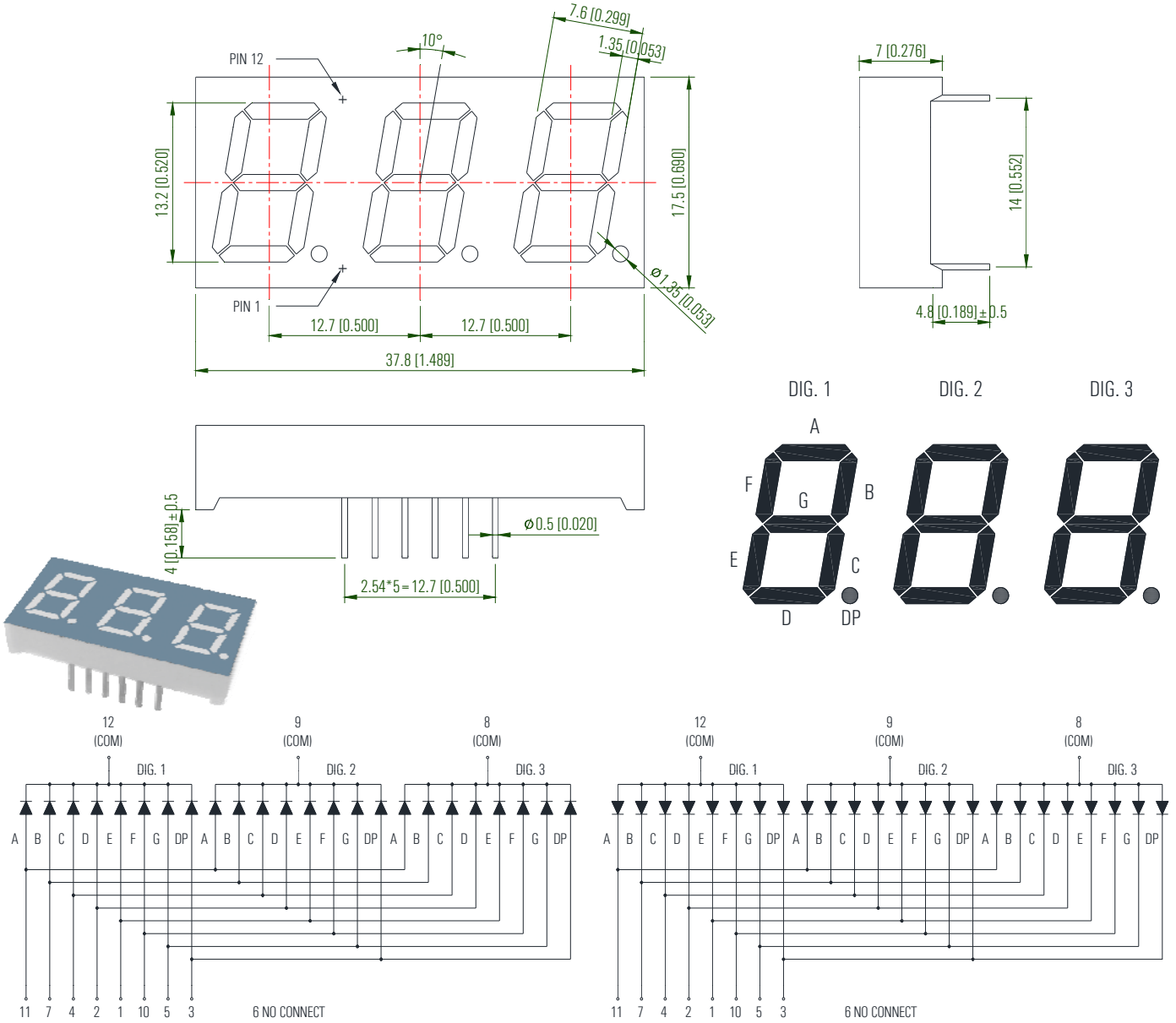

KW3-521CRA	Deep Red	630	Gray	20	30.0	Common Cathode
KW3-521CAA	Orange	605			34.0	
KW3-521CGA	Yellow Green	572			25.0	
KW3-521CGA-G5	Pure Green	525			92.0	
KW3-521CBA	Blue	470			50.0	
KW3-521CWA	White	x=0.30, y=0.31			260.0	
KW3-521ARA	Deep Red	630			30.0	Common Anode
KW3-521AAA	Orange	605			34.0	
KW3-521AGA	Yellow Green	572			25.0	
KW3-521AGA-G5	Pure Green	525			92.0	
KW3-521ABA	Blue	470			50.0	
KW3-521AWA	White	x=0.30, y=0.31			260.0	

Part Number	Emitting Color	λd (nm) / x, y	Face Color	Luminous Intensity Iv (mcd)		Circuit Common
				IF=mA	Typ.	

0.56" Triple Digit LED Display

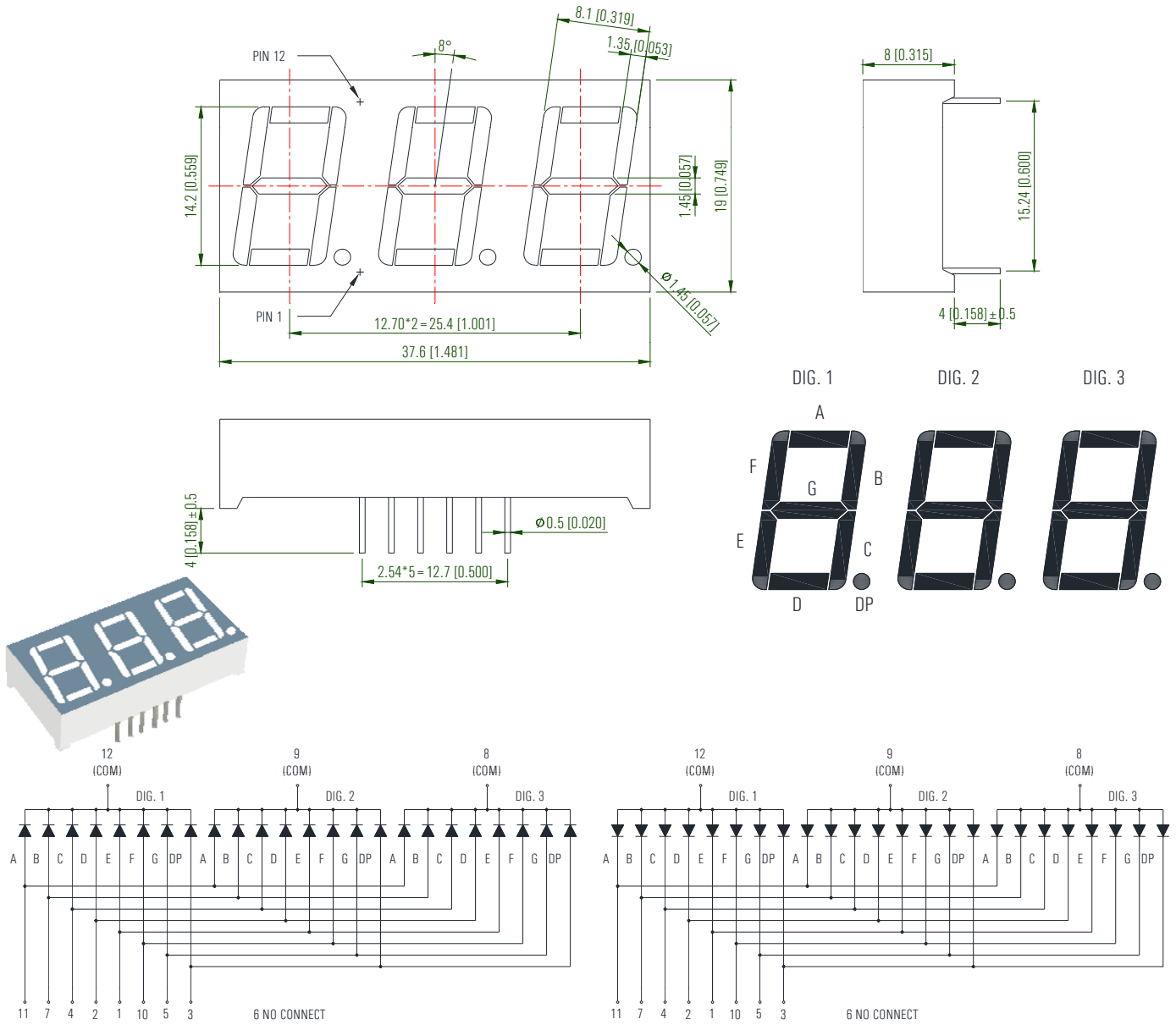

KW3-561CRA	Deep Red	630	Gray	20	32.0	Common Cathode
KW3-561CAA	Orange	605			34.0	
KW3-561CGA	Yellow Green	572			25.0	
KW3-561CGA-G5	Pure Green	525			92.0	
KW3-561CBA	Blue	470			50.0	
KW3-561CWA	White	x=0.30, y=0.31			260.0	
KW3-561ARA	Deep Red	630			32.0	Common Anode
KW3-561AAA	Orange	605			34.0	
KW3-561AGA	Yellow Green	572			25.0	
KW3-561AGA-G5	Pure Green	525			92.0	
KW3-561ABA	Blue	470			50.0	
KW3-561AWA	White	x=0.30, y=0.31			260.0	

Part Number	Emitting Color	λd (nm) / x, y	Face Color	Luminous Intensity Iv (mcd)		Circuit Common
				IF=mA	Typ.	

0.56" Triple Digit LED Display

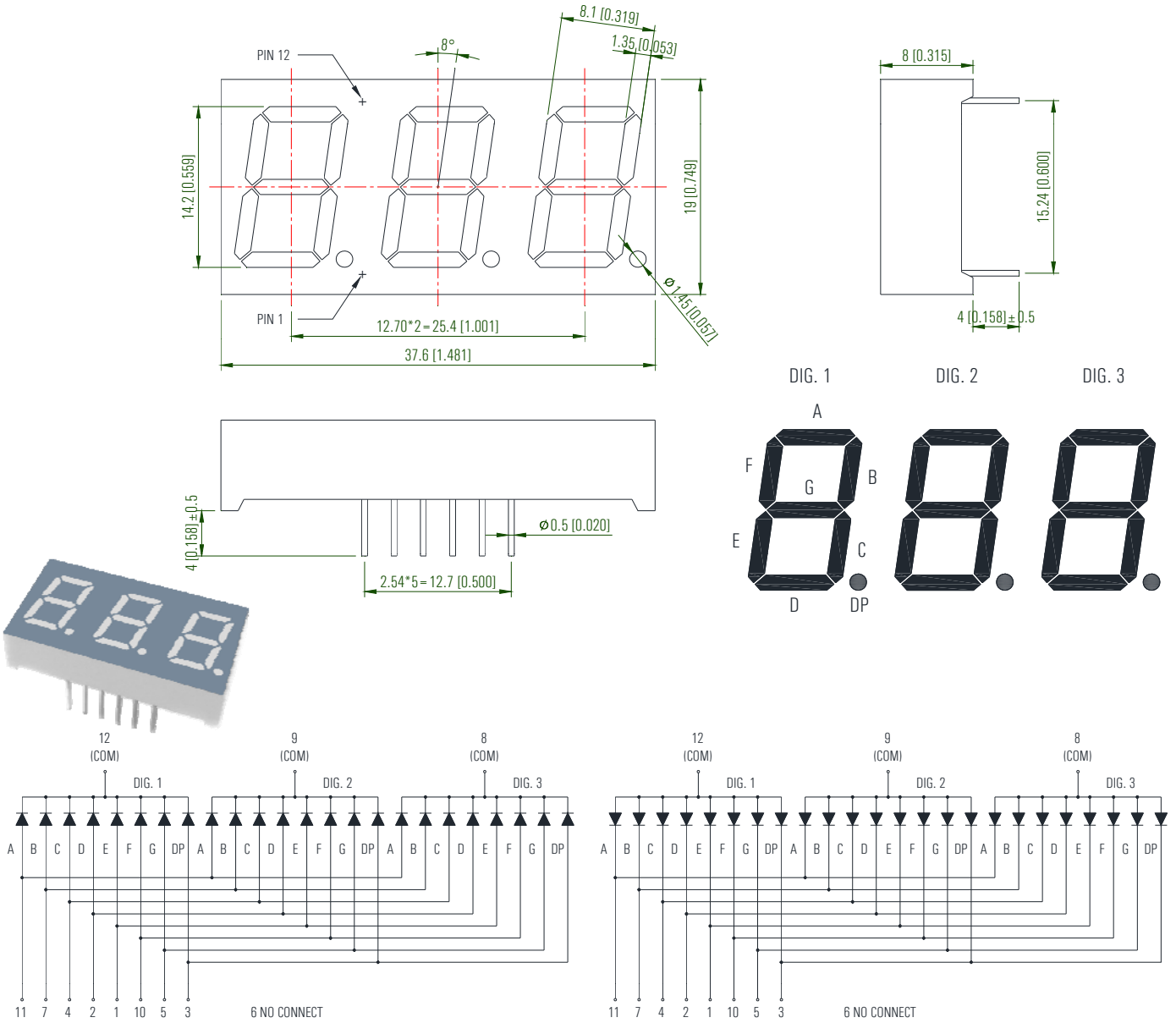

KW3-567CRA	Deep Red	630	Gray	20	32.0	Common Cathode
KW3-567CAA	Orange	605			34.0	
KW3-567CGA	Yellow Green	572			25.0	
KW3-567CGA-G5	Pure Green	525			92.0	
KW3-567CBA	Blue	470			50.0	
KW3-567CWA	White	x=0.30, y=0.31			260.0	
KW3-567ARA	Deep Red	630			32.0	Common Anode
KW3-567AAA	Orange	605			34.0	
KW3-567AGA	Yellow Green	572			25.0	
KW3-567AGA-G5	Pure Green	525			92.0	
KW3-567ABA	Blue	470			50.0	
KW3-567AWA	White	x=0.30, y=0.31			260.0	

Part Number	Emitting Color	λd (nm) / x, y	Face Color	Luminous Intensity Iv (mcd)		Circuit Common
				IF=mA	Typ.	

0.80" Triple Digit LED Display

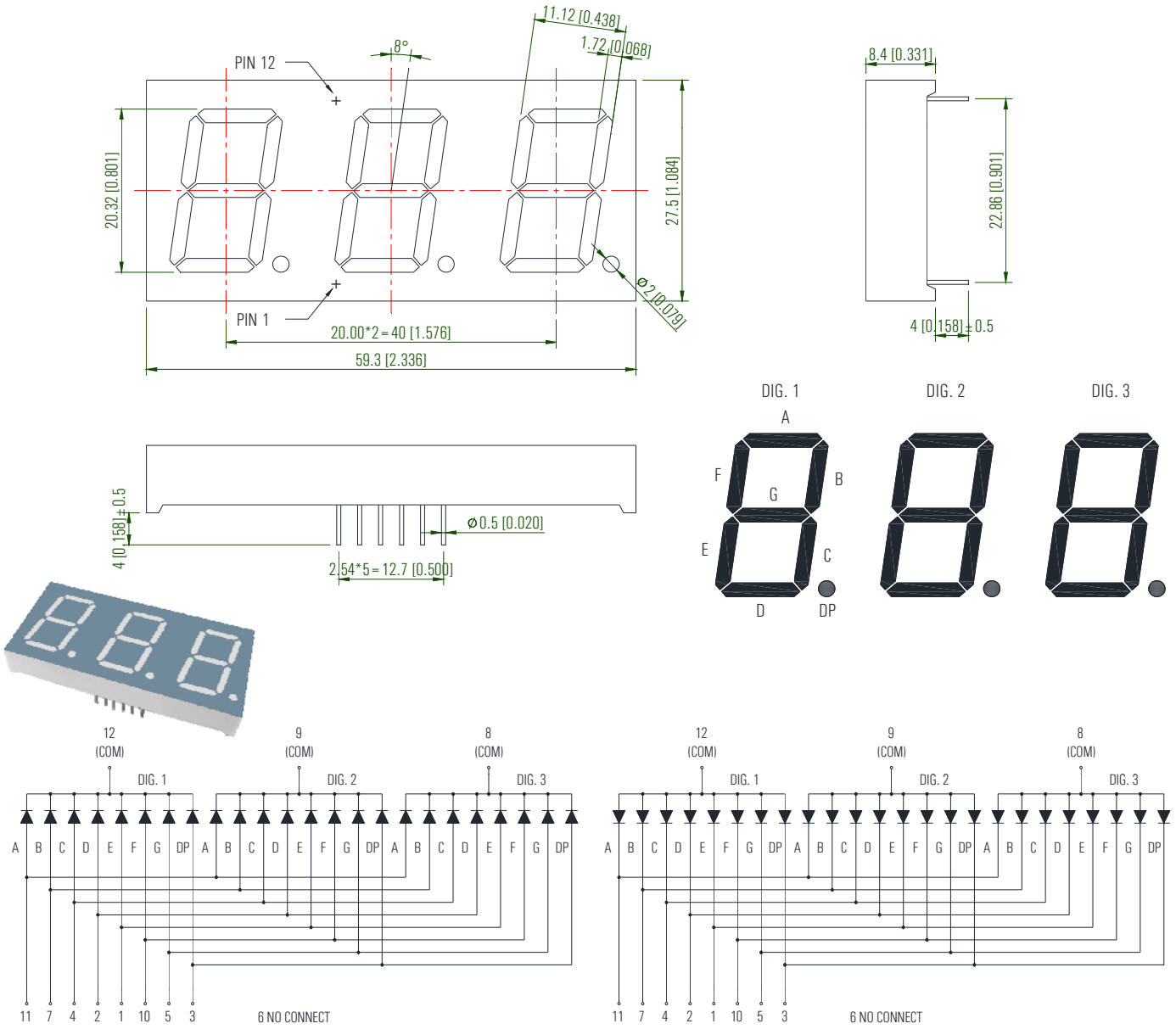

KW3-801CRA	Deep Red	630	Gray	20	34.0	Common Cathode
KW3-801CAA	Orange	605			35.0	
KW3-801CGA	Yellow Green	572			26.0	
KW3-801CGA-G5	Pure Green	525			96.0	
KW3-801CBA	Blue	470			56.0	
KW3-801CWA	White	x=0.30, y=0.31			270.0	
KW3-801ARA	Deep Red	630			34.0	Common Anode
KW3-801AAA	Orange	605			35.0	
KW3-801AGA	Yellow Green	572			26.0	
KW3-801AGA-G5	Pure Green	525			96.0	
KW3-801ABA	Blue	470			56.0	
KW3-801AWA	White	x=0.30, y=0.31			270.0	

Part Number	Emitting Color	λd (nm) / x, y	Face Color	Luminous Intensity Iv (mcd)		Circuit Common
				IF=mA	Typ.	

0.25" Quadruple Digit LED Display

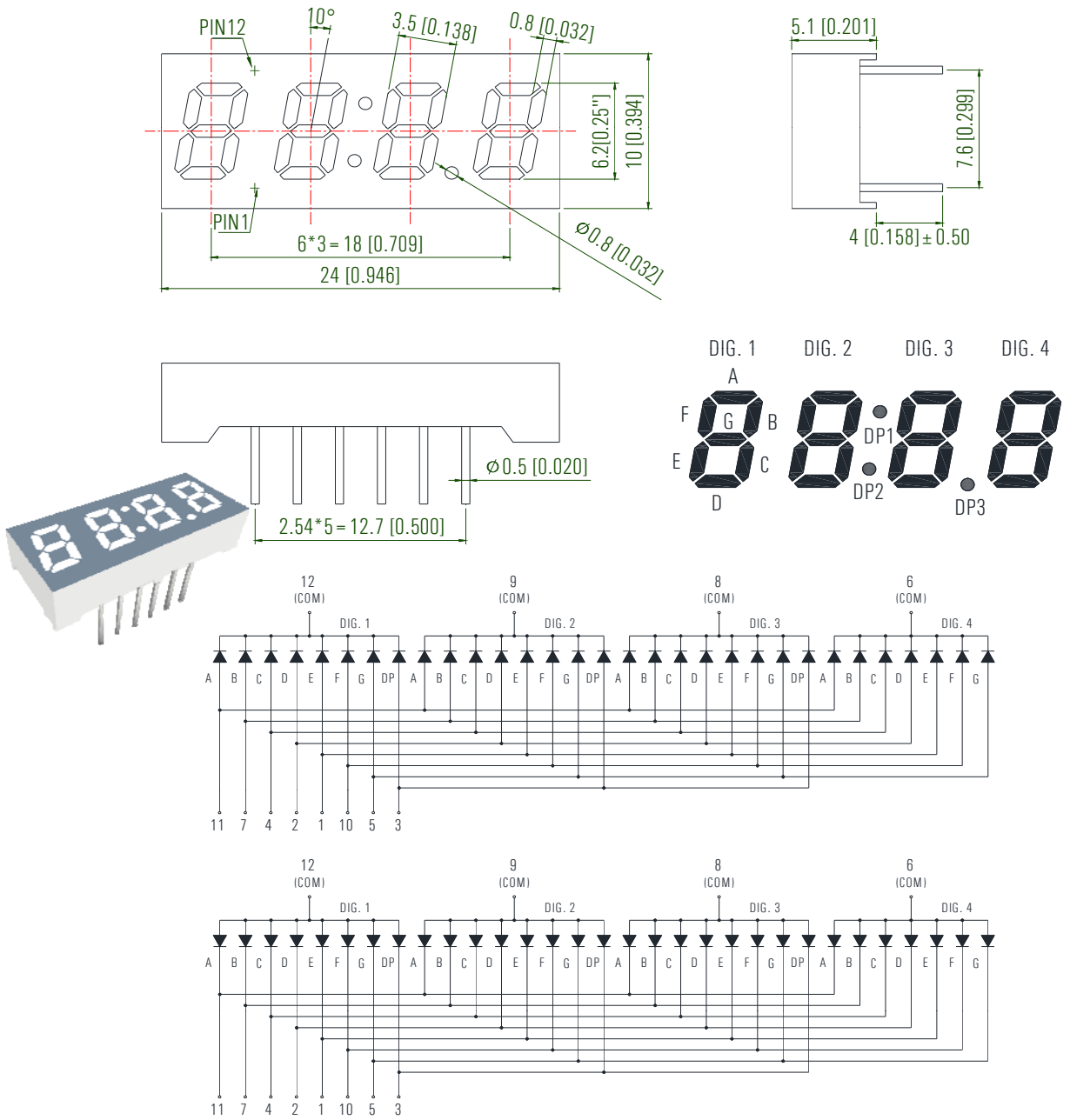

KW4-25DCRA	Deep Red	630	Gray	20	20.0	Common Cathode
KW4-25DCAA	Orange	605			26.0	
KW4-25DCGA	Yellow Green	572			18.0	
KW4-25DCGA-G5	Pure Green	525			72.0	
KW4-25DCBA	Blue	470			40.0	
KW4-25DCWA-Y	White	x=0.30, y=0.31			120.0	
KW4-25DARA	Deep Red	630			20.0	Common Anode
KW4-25DAAA	Orange	605			26.0	
KW4-25DAGA	Yellow Green	572			18.0	
KW4-25DAGA-G5	Pure Green	525			72.0	
KW4-25DABA	Blue	470			40.0	
KW4-25DAWA-Y	White	x=0.30, y=0.31			120.0	

Part Number	Emitting Color	λd (nm) / x, y	Face Color	Luminous Intensity Iv (mcd)		Circuit Common
				IF=mA	Typ.	

0.28" Quadruple Digit LED Display

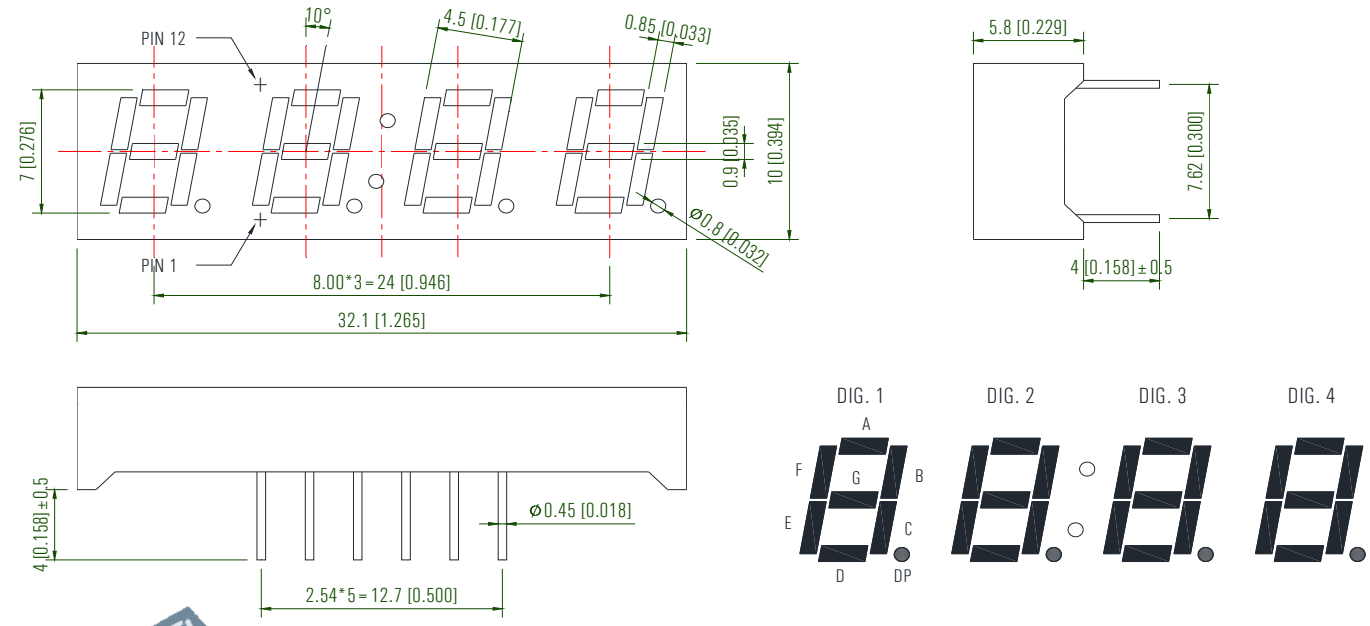

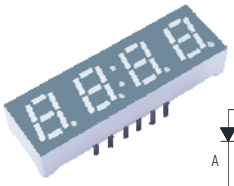

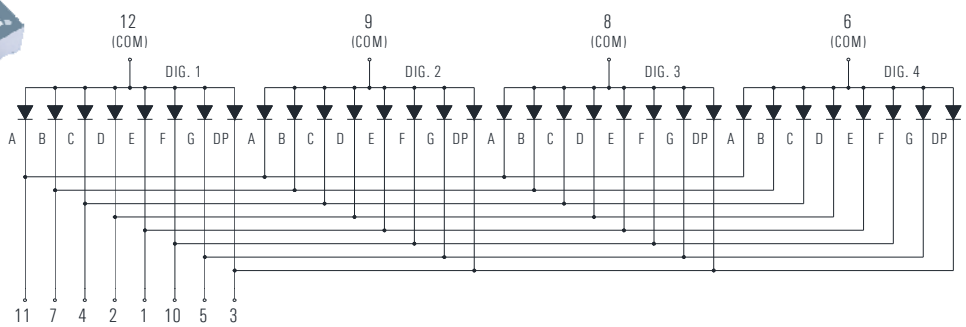

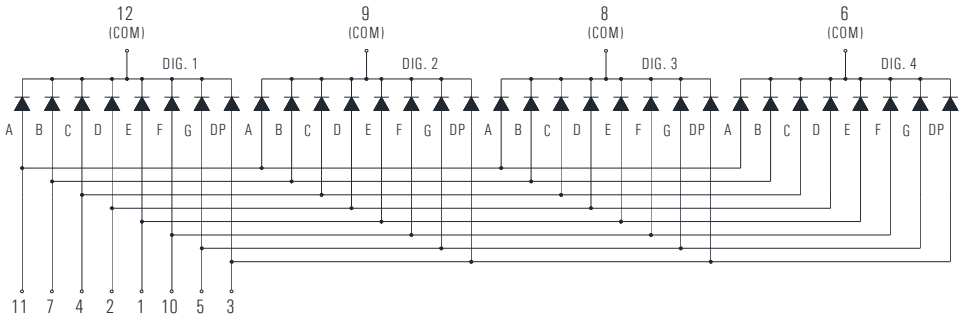

KW4-281CRA	Deep Red	630	Gray	20	22.0	Common Cathode
KW4-281CAA	Orange	605			30.0	
KW4-281CGA	Yellow Green	572			20.0	
KW4-281CGA-G5	Pure Green	525			80.0	
KW4-281CBA	Blue	470			44.0	
KW4-281CWA-Y	White	x=0.30, y=0.31			128.0	
KW4-281ARA	Deep Red	630			22.0	Common Anode
KW4-281AAA	Orange	605			30.0	
KW4-281AGA	Yellow Green	572			20.0	
KW4-281AGA-G5	Pure Green	525			80.0	
KW4-281ABA	Blue	470			44.0	
KW4-281AWA-Y	White	x=0.30, y=0.31			128.0	

Part Number	Emitting Color	λd (nm) / x, y	Face Color	Luminous Intensity Iv (mcd)		Circuit Common
				IF=mA	Typ.	

0.30" Quadruple Digit LED Display

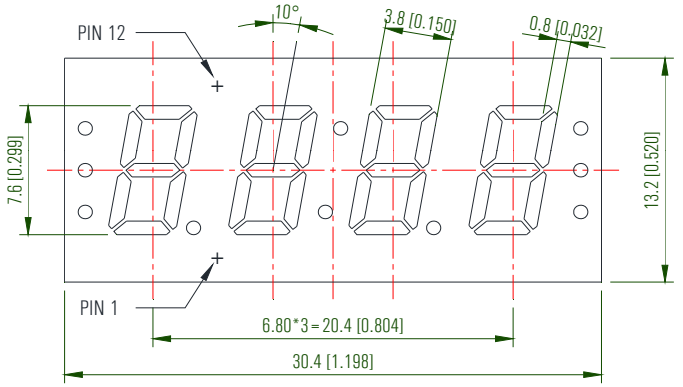

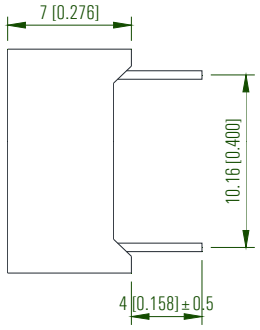

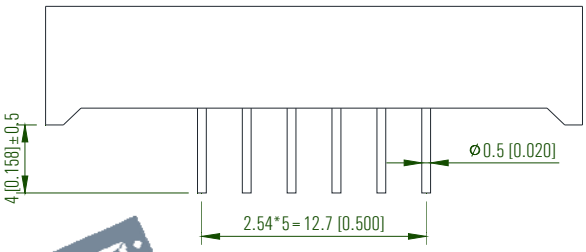

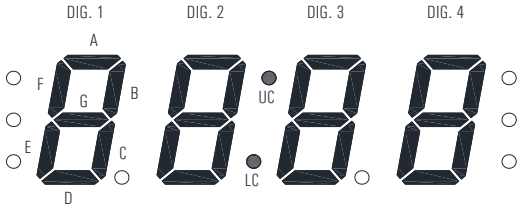

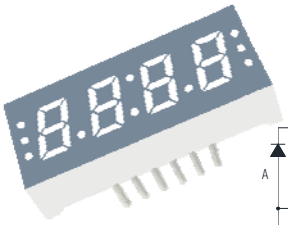

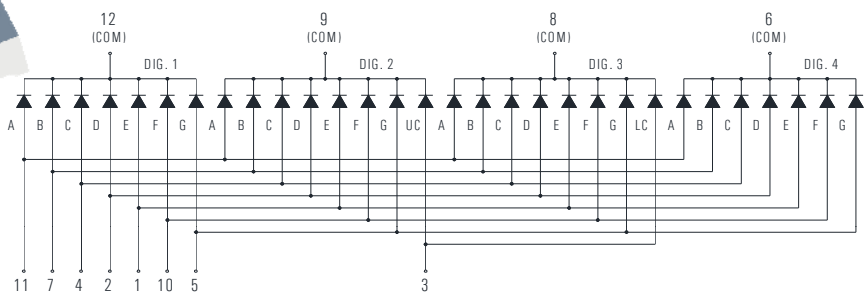

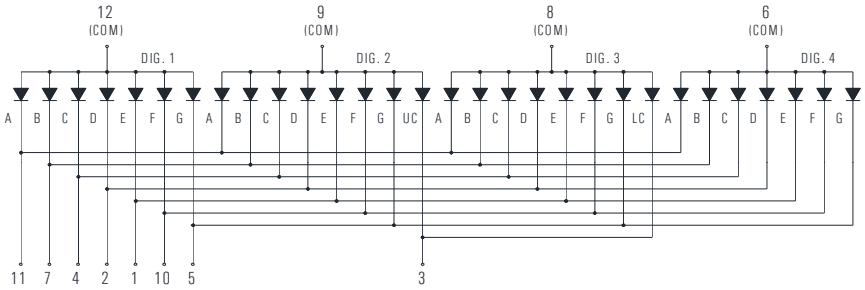

KW4-306CRA	Deep Red	630	Gray	20	24.0	Common Cathode
KW4-306CAA	Orange	605			32.0	
KW4-306CGA	Yellow Green	572			22.0	
KW4-306CGA-G5	Pure Green	525			84.0	
KW4-306CBA	Blue	470			46.0	
KW4-306CWA-Y	White	x=0.30, y=0.31			136.0	
KW4-306ARA	Deep Red	630			24.0	Common Anode
KW4-306AAA	Orange	605			32.0	
KW4-306AGA	Yellow Green	572			22.0	
KW4-306AGA-G5	Pure Green	525			84.0	
KW4-306ABA	Blue	470			46.0	
KW4-306AWA-Y	White	x=0.30, y=0.31			136.0	

Part Number	Emitting Color	λd (nm) / x, y	Face Color	Luminous Intensity Iv (mcd)		Circuit Common
				IF=mA	Typ.	

0.30" Quadruple Digit LED Display

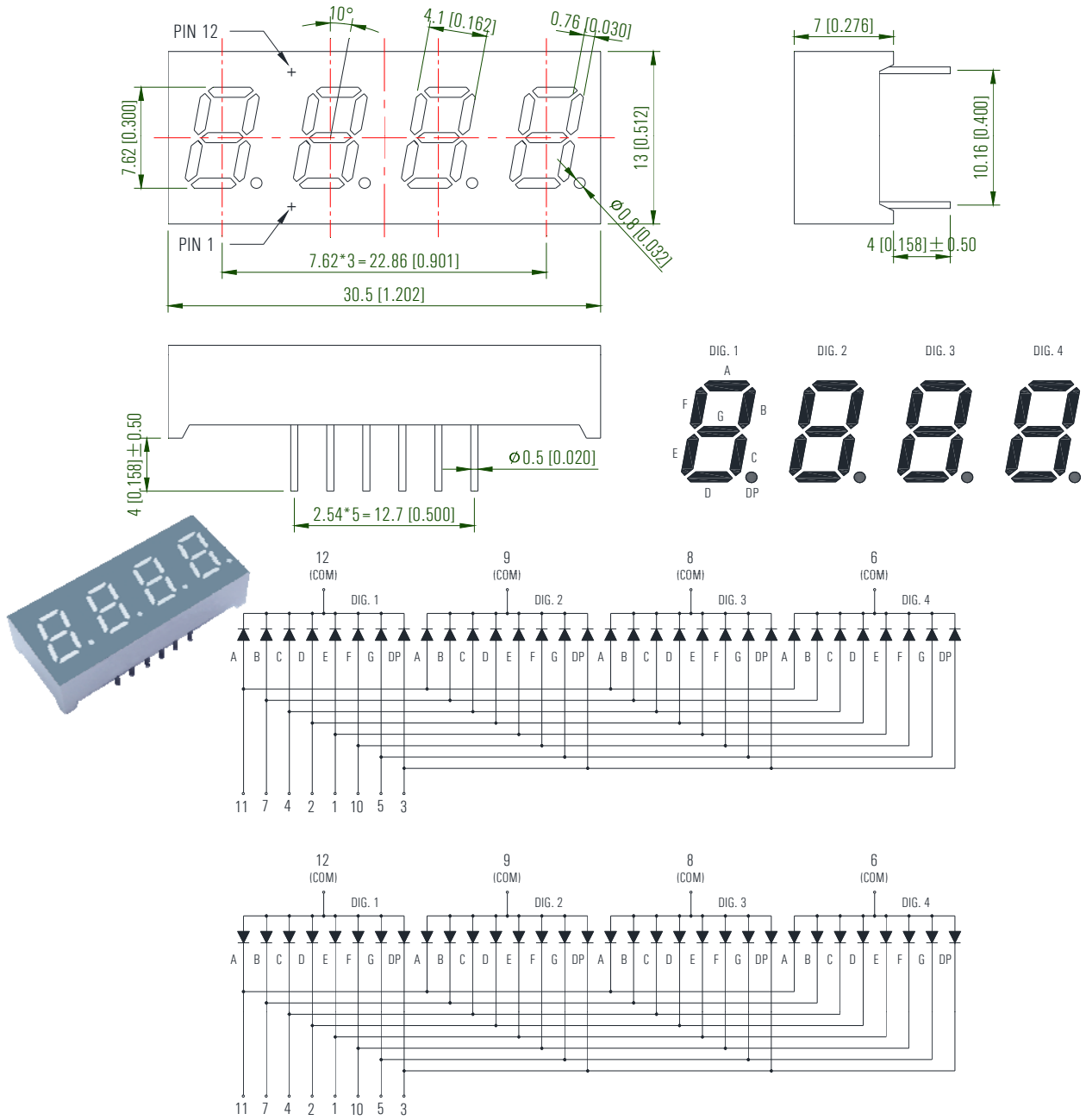

KW4-30GCRA	Deep Red	630	Gray	20	24.0	Common Cathode
KW4-30GCAA	Orange	605			32.0	
KW4-30GCGA	Yellow Green	572			22.0	
KW4-30GCGA-G5	Pure Green	525			84.0	
KW4-30GCBA	Blue	470			46.0	
KW4-30GCWA-Y	White	x=0.30, y=0.31			136.0	
KW4-30GARA	Deep Red	630			24.0	Common Anode
KW4-30GAAA	Orange	605			32.0	
KW4-30GAGA	Yellow Green	572			22.0	
KW4-30GAGA-G5	Pure Green	525			84.0	
KW4-30GABA	Blue	470			46.0	
KW4-30GAWA-Y	White	x=0.30, y=0.31			136.0	

Part Number	Emitting Color	λd (nm) / x, y	Face Color	Luminous Intensity Iv (mcd)		Circuit Common
				IF=mA	Typ.	

0.31" Quadruple Digit LED Display

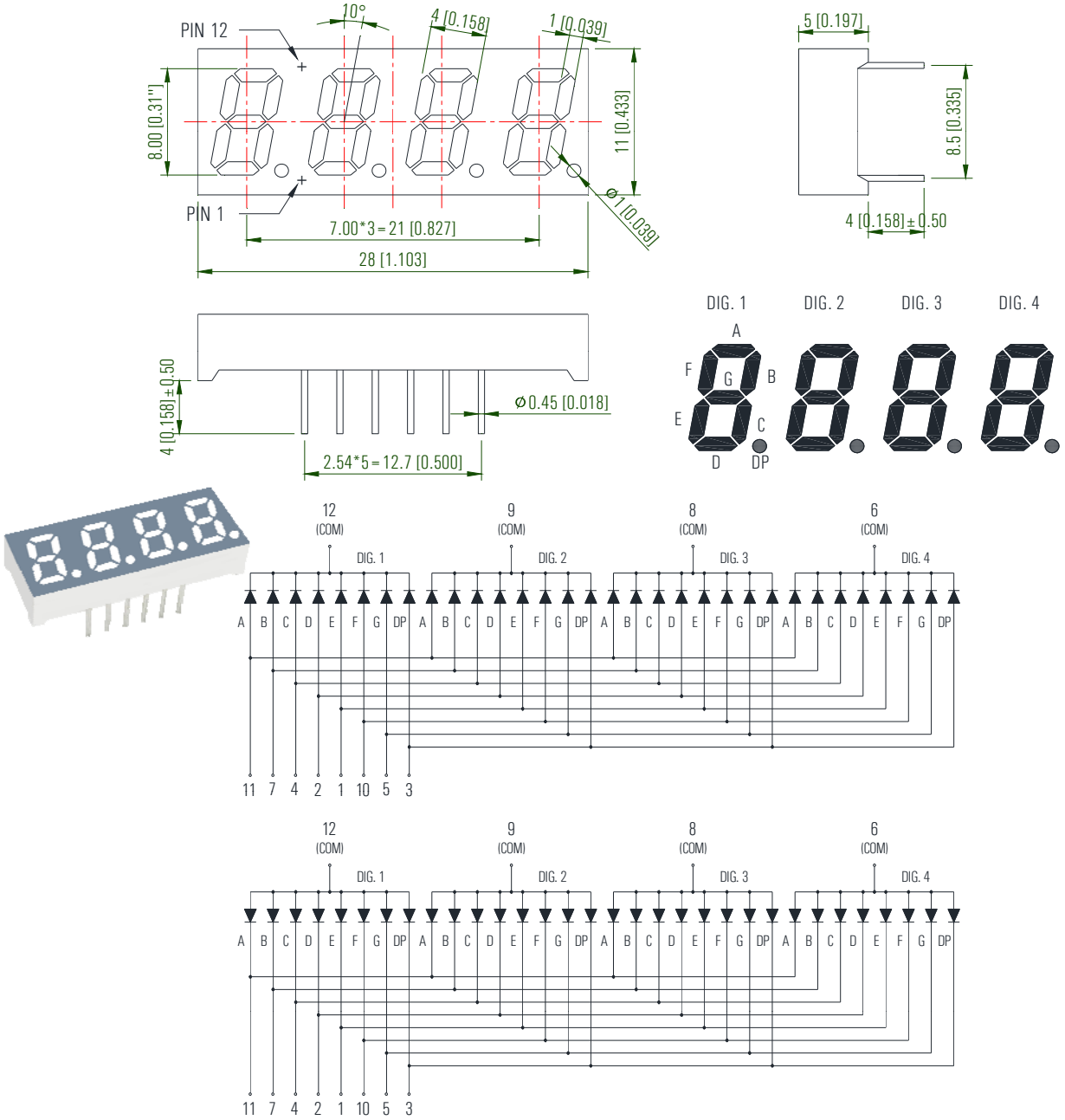

KW4-311CRA	Deep Red	630	Gray	20	24.0	Common Cathode
KW4-311CAA	Orange	605			32.0	
KW4-311CGA	Yellow Green	572			22.0	
KW4-311CGA-G5	Pure Green	525			84.0	
KW4-311CBA	Blue	470			46.0	
KW4-311CWA-Y	White	x=0.30, y=0.31			136.0	
KW4-311ARA	Deep Red	630			24.0	Common Anode
KW4-311AAA	Orange	605			32.0	
KW4-311AGA	Yellow Green	572			22.0	
KW4-311AGA-G5	Pure Green	525			84.0	
KW4-311ABA	Blue	470			46.0	
KW4-311AWA-Y	White	x=0.30, y=0.31			136.0	

Part Number	Emitting Color	λd (nm) / x, y	Face Color	Luminous Intensity Iv (mcd)		Circuit Common
				IF=mA	Typ.	

0.36" Quadruple Digit LED Display

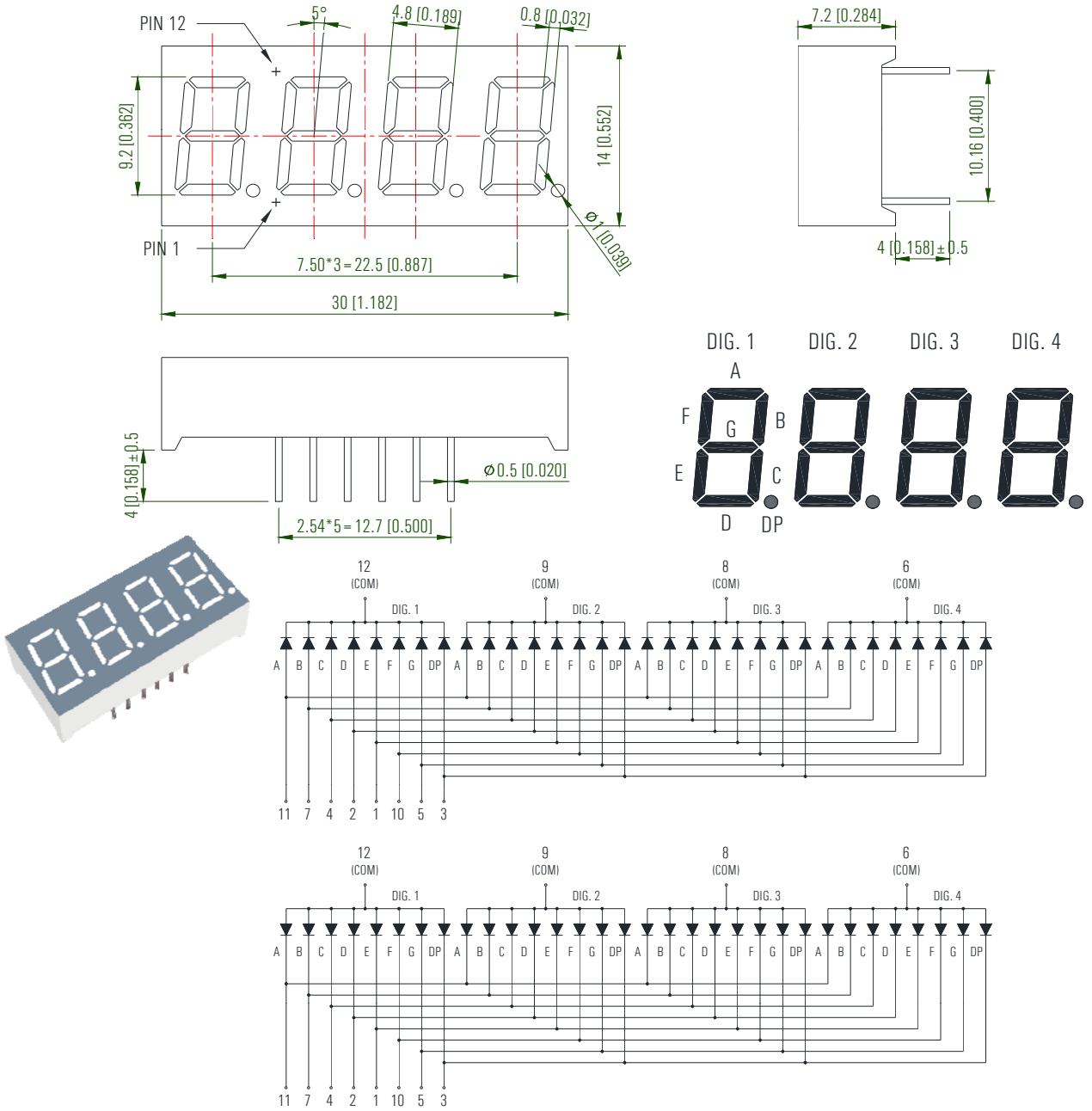

KW4-361CRA	Deep Red	630	Gray	20	25.0	Common Cathode
KW4-361CAA	Orange	605			32.0	
KW4-361CGA	Yellow Green	572			23.0	
KW4-361CGA-G5	Pure Green	525			86.0	
KW4-361CBA	Blue	470			46.0	
KW4-361CWA-Y	White	x=0.30, y=0.31			137.0	
KW4-361ARA	Deep Red	630			25.0	Common Anode
KW4-361AAA	Orange	605			32.0	
KW4-361AGA	Yellow Green	572			23.0	
KW4-361AGA-G5	Pure Green	525			86.0	
KW4-361ABA	Blue	470			46.0	
KW4-361AWA-Y	White	x=0.30, y=0.31			137.0	

Part Number	Emitting Color	λd (nm) / x, y	Face Color	Luminous Intensity Iv (mcd)		Circuit Common
				IF=mA	Typ.	

0.36" Quadruple Digit LED Display

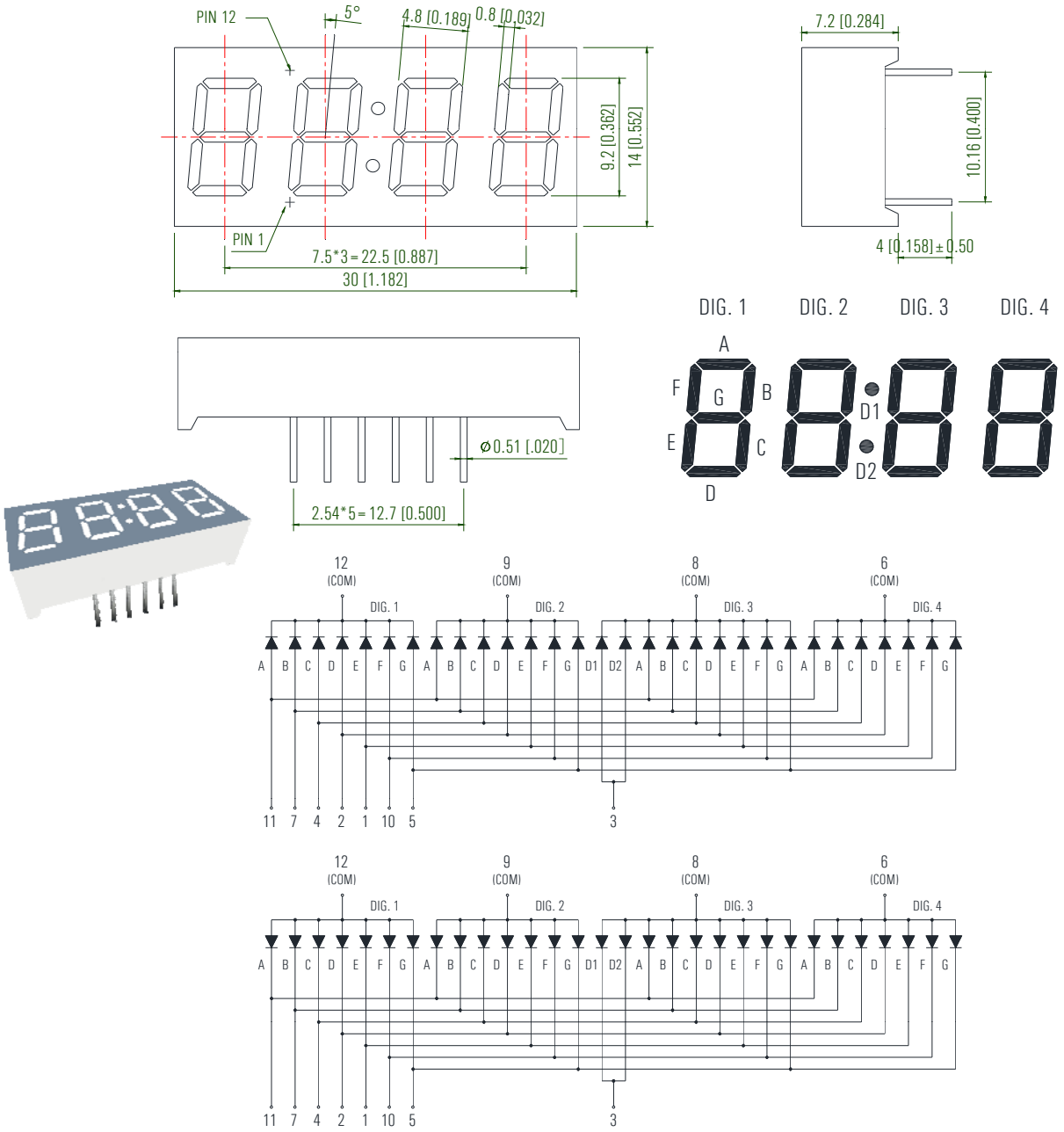

KW4-367CRA	Deep Red	630	Gray	20	25.0	Common Cathode
KW4-367CAA	Orange	605			32.0	
KW4-367CGA	Yellow Green	572			23.0	
KW4-367CGA-G5	Pure Green	525			86.0	
KW4-367CBA	Blue	470			46.0	
KW4-367CWA-Y	White	x=0.30, y=0.31			137.0	
KW4-367ARA	Deep Red	630			25.0	Common Anode
KW4-367AAA	Orange	605			32.0	
KW4-367AGA	Yellow Green	572			23.0	
KW4-367AGA-G5	Pure Green	525			86.0	
KW4-367ABA	Blue	470			46.0	
KW4-367AWA-Y	White	x=0.30, y=0.31			137.0	

Part Number	Emitting Color	λd (nm) / x, y	Face Color	Luminous Intensity Iv (mcd)		Circuit Common
				IF=mA	Typ.	

0.39" Quadruple Digit LED Display

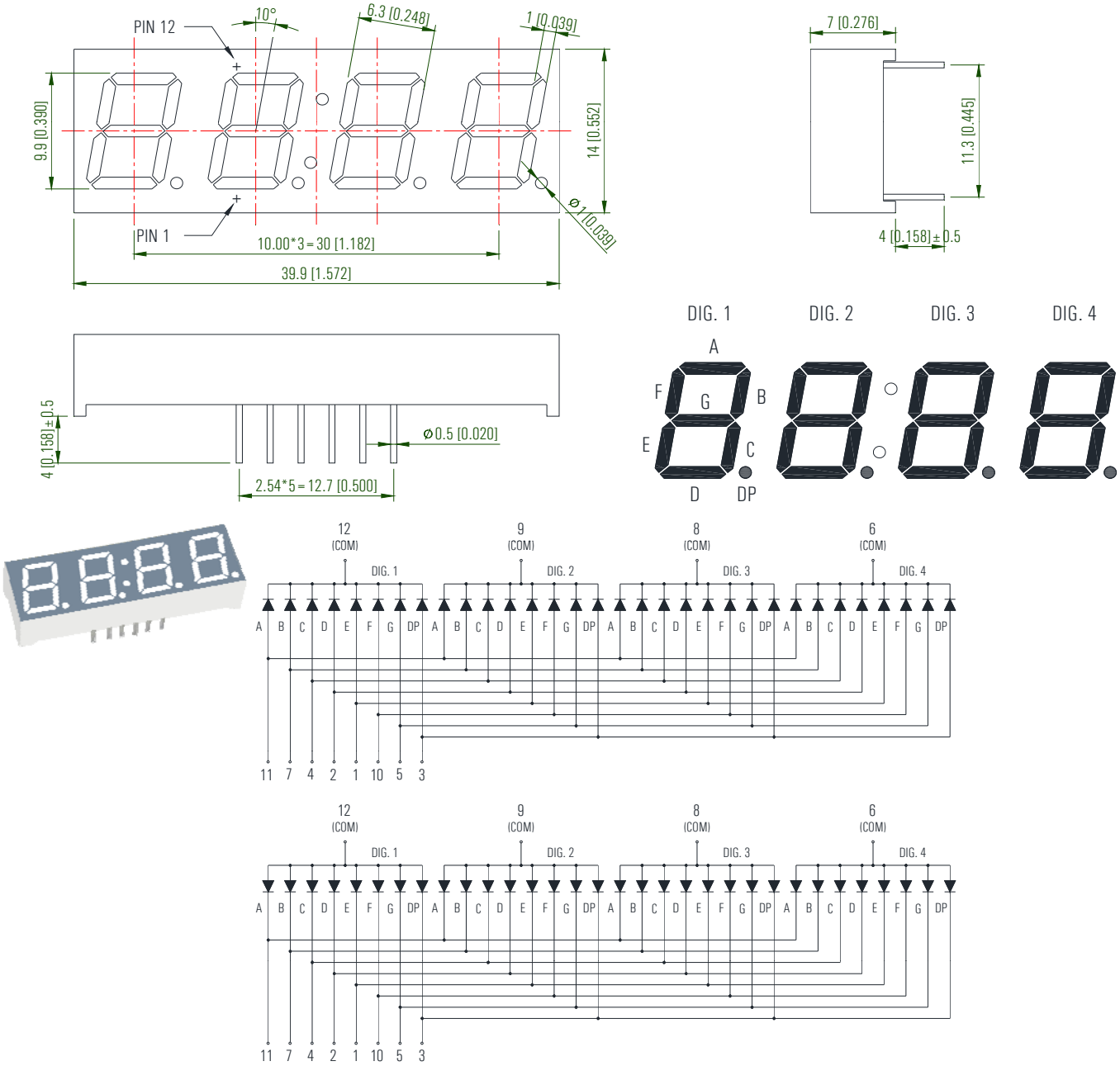

KW4-391CRA	Deep Red	630	Gray	20	26.0	Common Cathode
KW4-391CAA	Orange	605			32.0	
KW4-391CGA	Yellow Green	572			24.0	
KW4-391CGA-G5	Pure Green	525			88.0	
KW4-391CBA	Blue	470			47.0	
KW4-391CWA-Y	White	x=0.30, y=0.31			138.0	
KW4-391ARA	Deep Red	630			26.0	Common Anode
KW4-391AAA	Orange	605			32.0	
KW4-391AGA	Yellow Green	572			24.0	
KW4-391AGA-G5	Pure Green	525			88.0	
KW4-391ABA	Blue	470			47.0	
KW4-391AWA-Y	White	x=0.30, y=0.31			138.0	

Part Number	Emitting Color	λd (nm) / x, y	Face Color	Luminous Intensity Iv (mcd)		Circuit Common
				IF=mA	Typ.	

0.39" Quadruple Digit LED Display

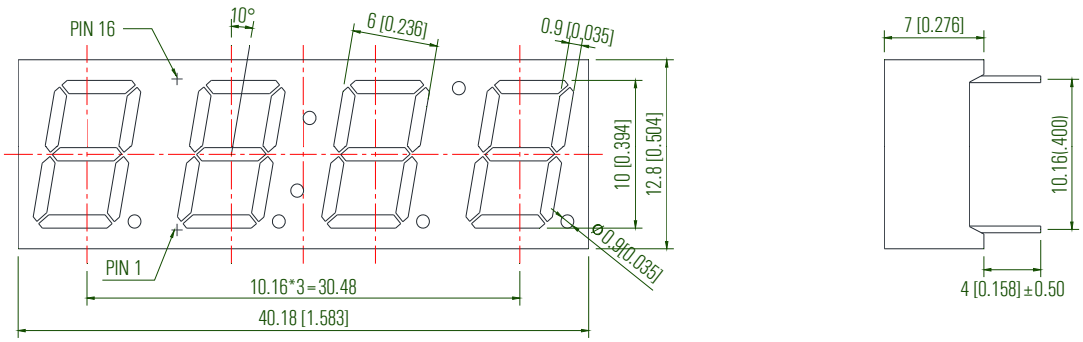

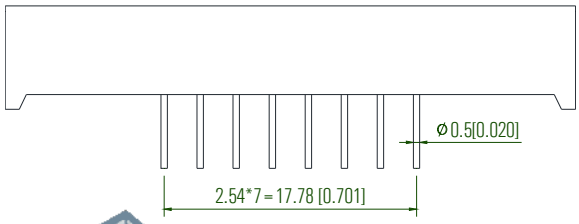

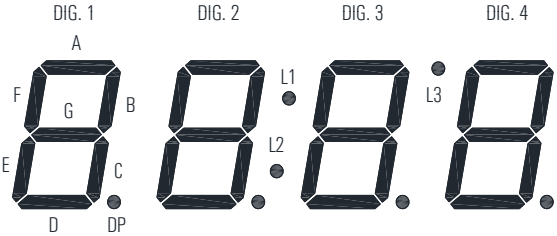

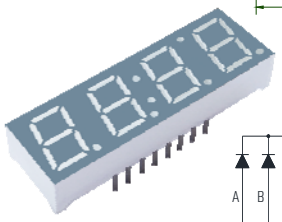

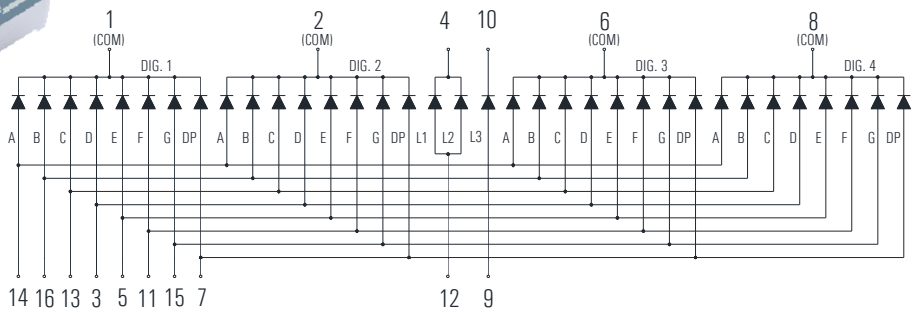

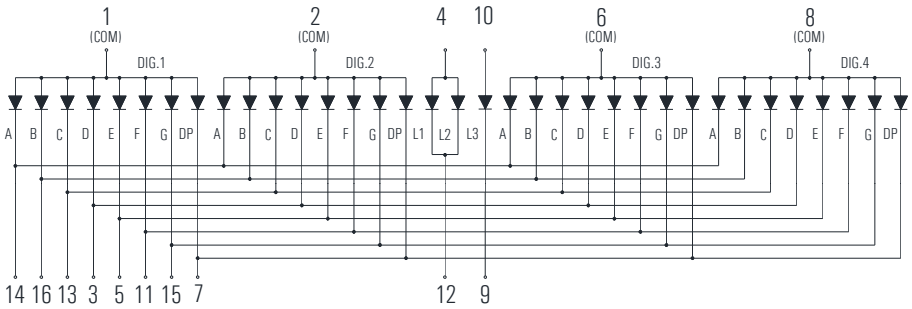

KW4-39DCRA	Deep Red	630	Gray	20	26.0	Common Cathode
KW4-39DCAA	Orange	605			32.0	
KW4-39DCGA	Yellow Green	572			24.0	
KW4-39DCGA-G5	Pure Green	525			88.0	
KW4-39DCBA	Blue	470			47.0	
KW4-39DCWA-Y	White	x=0.30, y=0.31			138.0	
KW4-39DARA	Deep Red	630			26.0	Common Anode
KW4-39DAAA	Orange	605			32.0	
KW4-39DAGA	Yellow Green	572			24.0	
KW4-39DAGA-G5	Pure Green	525			88.0	
KW4-39DABA	Blue	470			47.0	
KW4-39DAWA-Y	White	x=0.30, y=0.31			138.0	

Part Number	Emitting Color	λd (nm) / x, y	Face Color	Luminous Intensity Iv (mcd)		Circuit Common
				IF=mA	Typ.	

0.39" Quadruple Digit LED Display

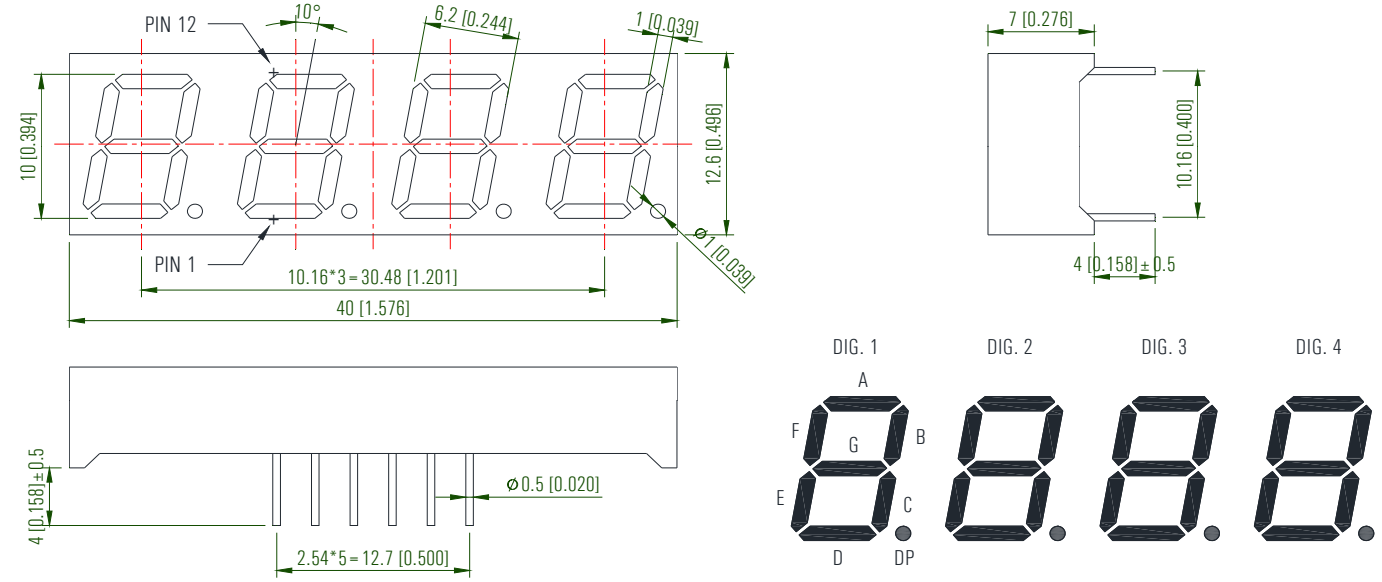

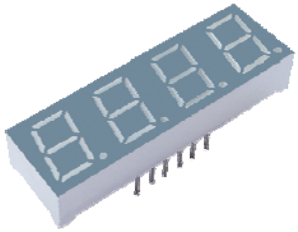

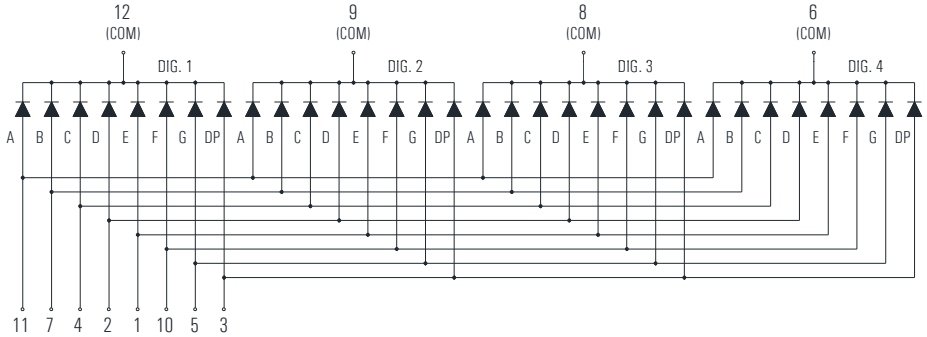

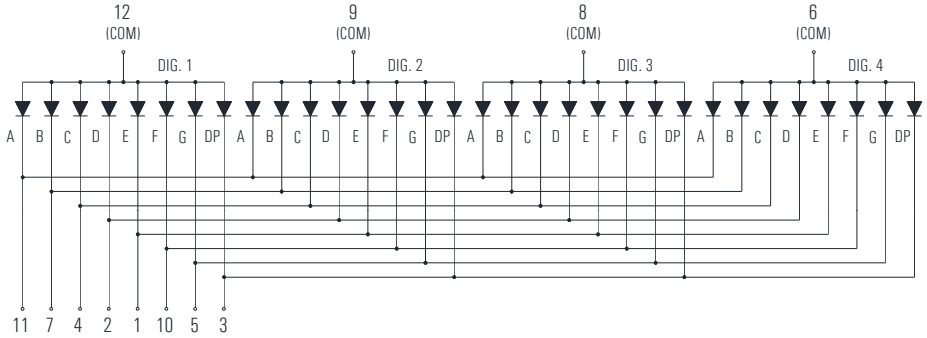

KW4-39FCRA	Deep Red	630	Gray	20	26.0	Common Cathode
KW4-39FCAA	Orange	605			32.0	
KW4-39FCGA	Yellow Green	572			24.0	
KW4-39FCGA-G5	Pure Green	525			88.0	
KW4-39FCBA	Blue	470			47.0	
KW4-39FCWA-Y	White	x=0.30, y=0.31			138.0	
KW4-39FARA	Deep Red	630			26.0	Common Anode
KW4-39FAAA	Orange	605			32.0	
KW4-39FAGA	Yellow Green	572			24.0	
KW4-39FAGA-G5	Pure Green	525			88.0	
KW4-39FABA	Blue	470			47.0	
KW4-39FAWA-Y	White	x=0.30, y=0.31			138.0	

Part Number	Emitting Color	λd (nm) / x, y	Face Color	Luminous Intensity Iv (mcd)		Circuit Common
				IF=mA	Typ.	

0.40" Quadruple Digit LED Display

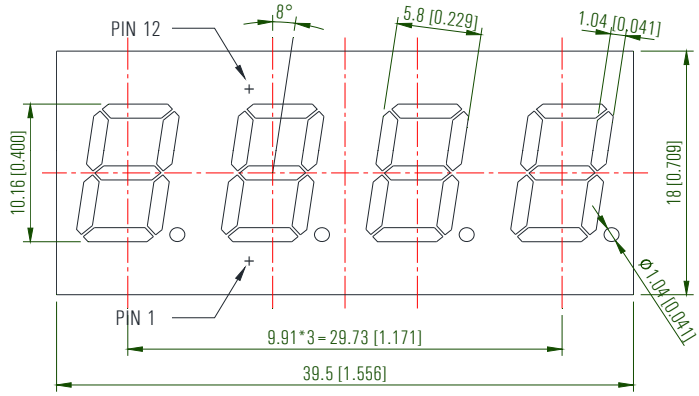

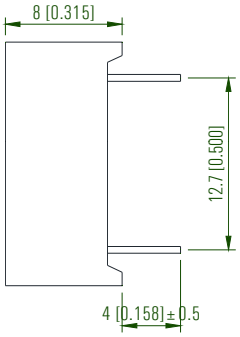

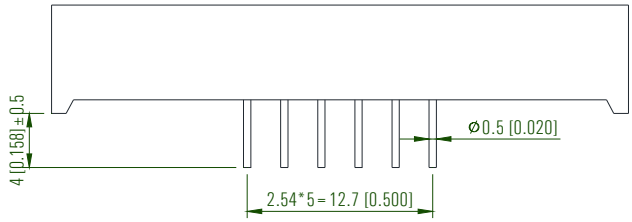

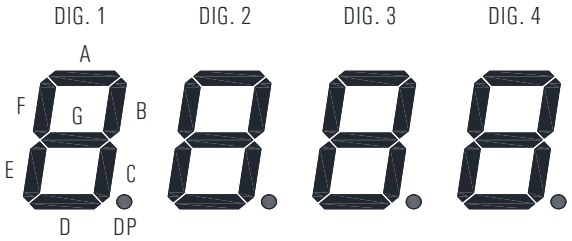

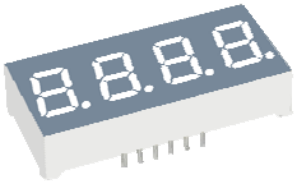

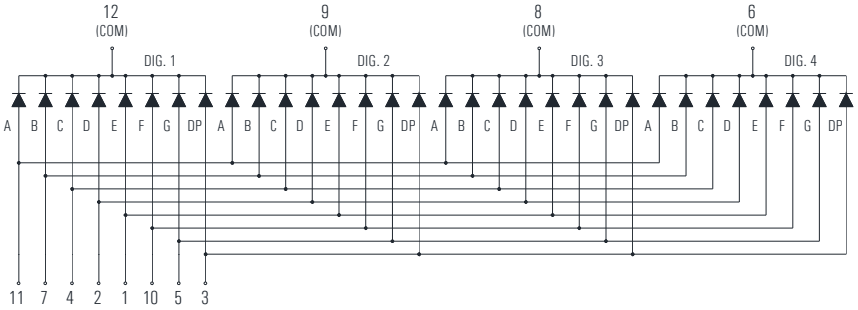

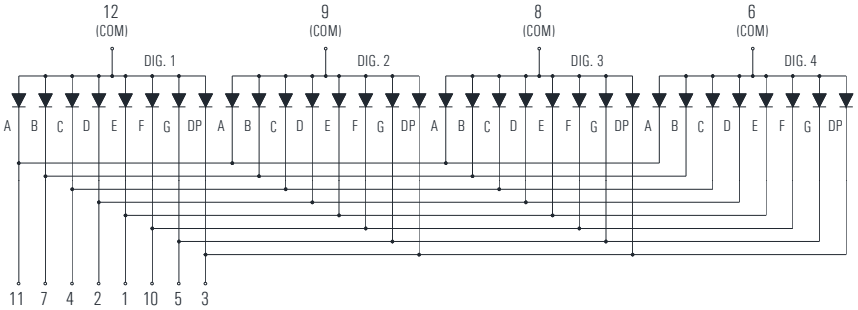

KW4-401CRA	Deep Red	630	Gray	20	30.0	Common Cathode
KW4-401CAA	Orange	605			34.0	
KW4-401CGA	Yellow Green	572			24.0	
KW4-401CGA-G5	Pure Green	525			90.0	
KW4-401CBA	Blue	470			47.0	
KW4-401CWA	White	x=0.27, y=0.28			140.0	
KW4-401ARA	Deep Red	630			30.0	Common Anode
KW4-401AAA	Orange	605			34.0	
KW4-401AGA	Yellow Green	572			24.0	
KW4-401AGA-G5	Pure Green	525			90.0	
KW4-401ABA	Blue	470			47.0	
KW4-401AWA	White	x=0.27, y=0.28			140.0	

Part Number	Emitting Color	λd (nm) / x, y	Face Color	Luminous Intensity Iv (mcd)		Circuit Common
				IF=mA	Typ.	

0.40" Quadruple Digit LED Display

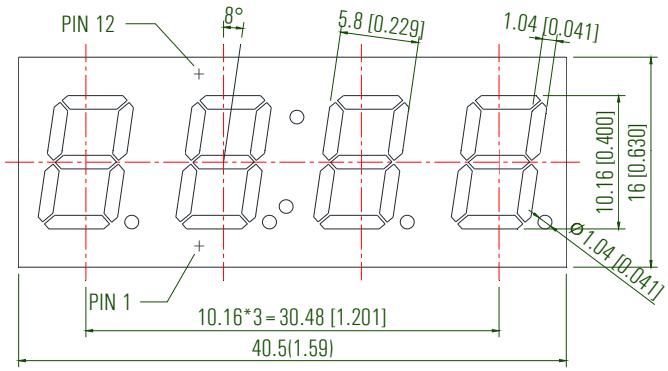

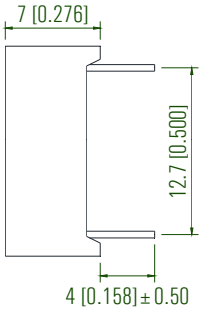

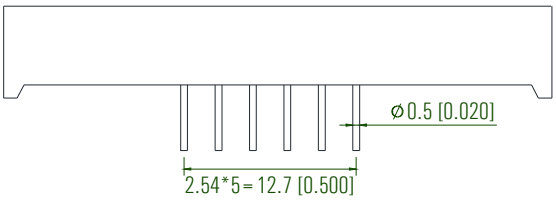

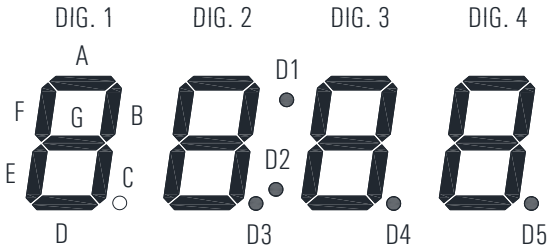

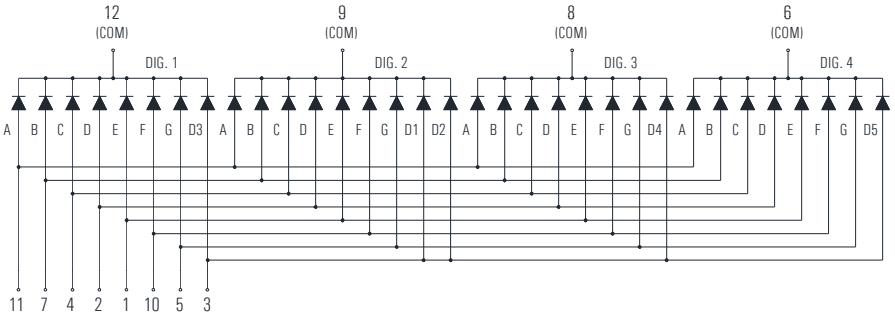

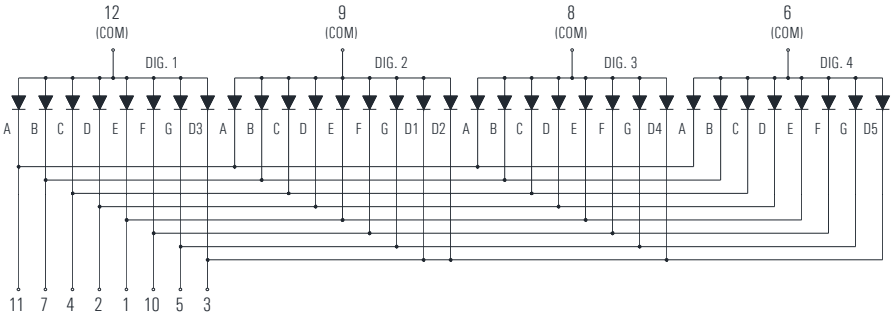

KW4-402CRA	Deep Red	630	Gray	20	30.0	Common Cathode
KW4-402CAA	Orange	605			34.0	
KW4-402CGA	Yellow Green	572			24.0	
KW4-402CGA-G5	Pure Green	525			90.0	
KW4-402CBA	Blue	470			47.0	
KW4-402CWA	White	x=0.27, y=0.28			140.0	
KW4-402ARA	Deep Red	630			30.0	Common Anode
KW4-402AAA	Orange	605			34.0	
KW4-402AGA	Yellow Green	572			24.0	
KW4-402AGA-G5	Pure Green	525			90.0	
KW4-402ABA	Blue	470			47.0	
KW4-402AWA	White	x=0.27, y=0.28			140.0	

Part Number	Emitting Color	λd (nm) / x, y	Face Color	Luminous Intensity Iv (mcd)		Circuit Common
				IF=mA	Typ.	

0.52" Quadruple Digit LED Display

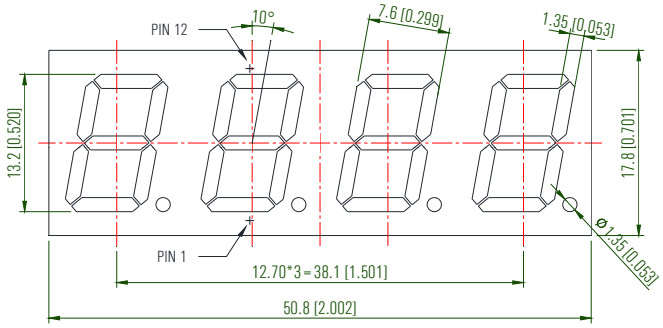

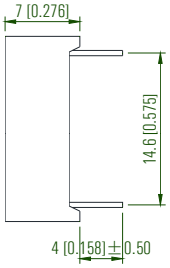

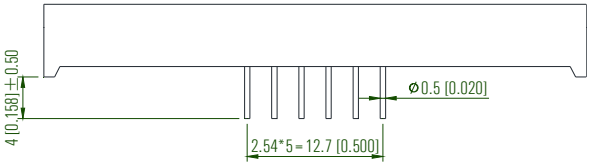

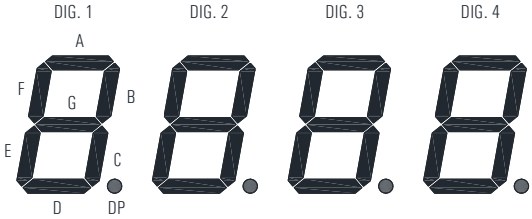

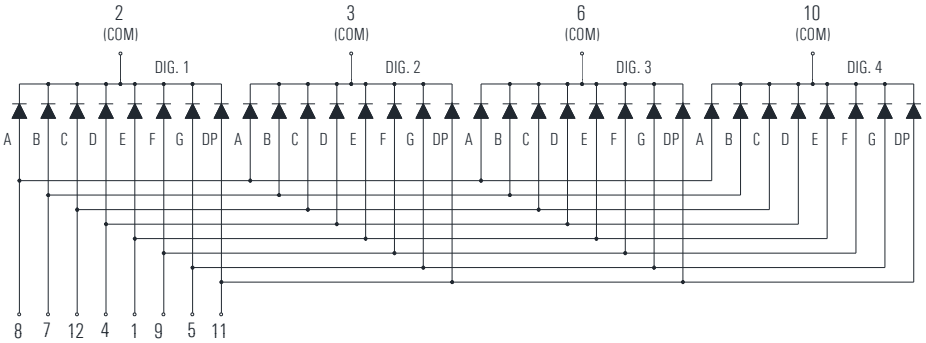

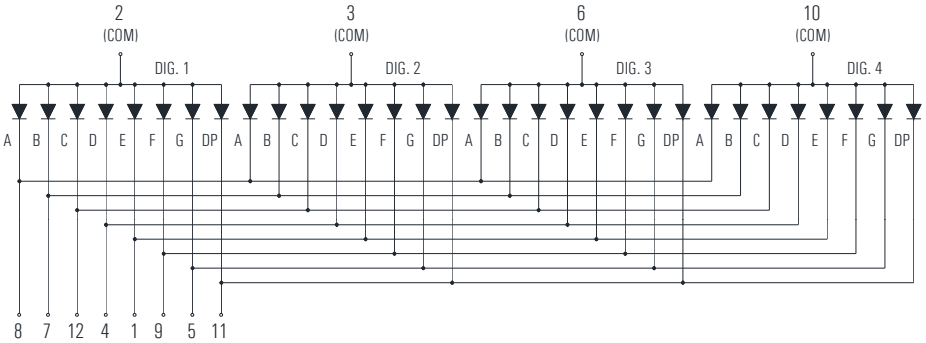

KW4-521CRA	Deep Red	630	Gray	20	32.0	Common Cathode
KW4-521CAA	Orange	605			34.0	
KW4-521CGA	Yellow Green	572			25.0	
KW4-521CGA-G5	Pure Green	525			92.0	
KW4-521CBA	Blue	470			50.0	
KW4-521CWA	White	x=0.30, y=0.31			260.0	
KW4-521ARA	Deep Red	630			32.0	Common Anode
KW4-521AAA	Orange	605			34.0	
KW4-521AGA	Yellow Green	572			25.0	
KW4-521AGA-G5	Pure Green	525			92.0	
KW4-521ABA	Blue	470			50.0	
KW4-521AWA	White	x=0.30, y=0.31			260.0	

Part Number	Emitting Color	λd (nm) / x, y	Face Color	Luminous Intensity Iv (mcd)		Circuit Common
				IF=mA	Typ.	

0.56" Quadruple Digit LED Display

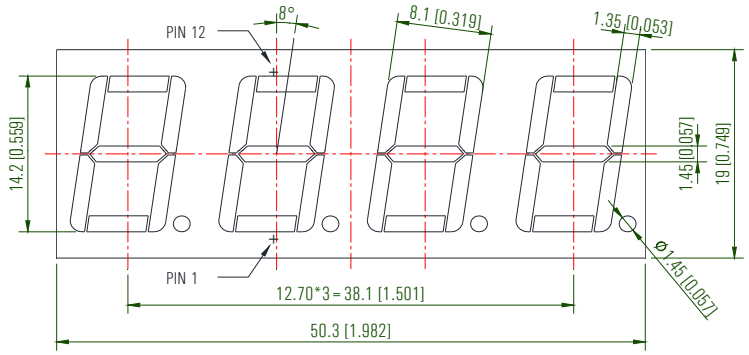

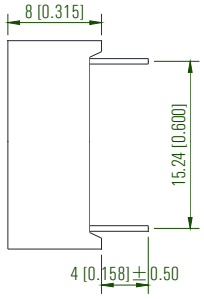

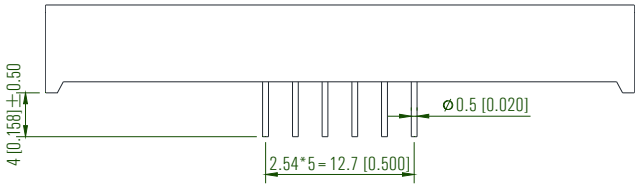

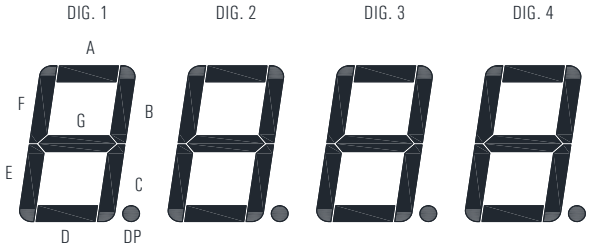

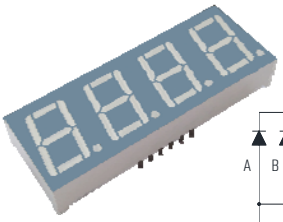

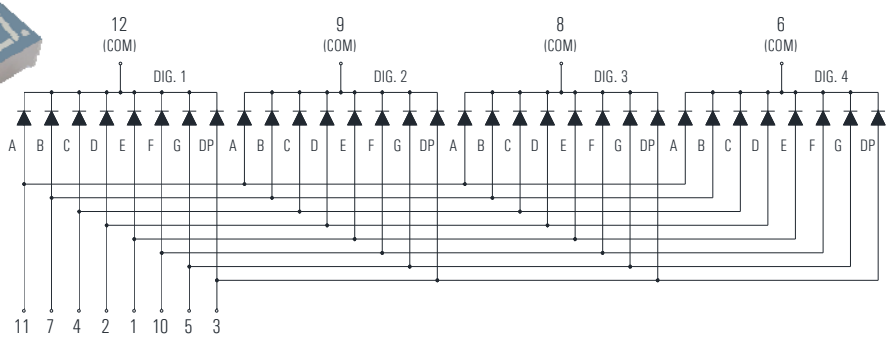

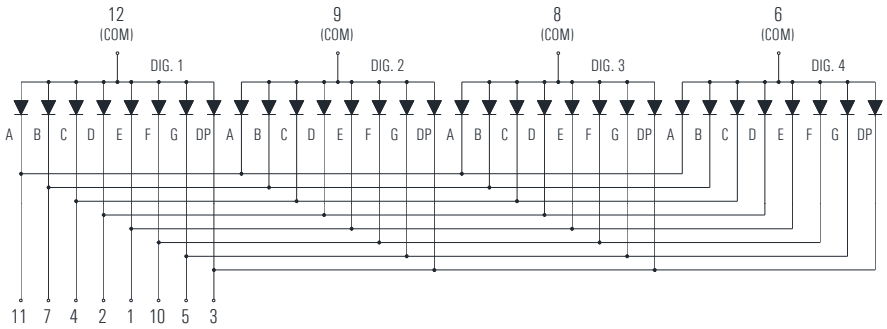

KW4-561CRA	Deep Red	630	Gray	20	32.0	Common Cathode
KW4-561CAA	Orange	605			34.0	
KW4-561CGA	Yellow Green	572			25.0	
KW4-561CGA-G5	Pure Green	525			92.0	
KW4-561CBA	Blue	470			50.0	
KW4-561CWA	White	x=0.30, y=0.31			260.0	
KW4-561ARA	Deep Red	630			32.0	Common Anode
KW4-561AAA	Orange	605			34.0	
KW4-561AGA	Yellow Green	572			25.0	
KW4-561AGA-G5	Pure Green	525			92.0	
KW4-561ABA	Blue	470			50.0	
KW4-561AWA	White	x=0.30, y=0.31			260.0	

Part Number	Emitting Color	λd (nm) / x, y	Face Color	Luminous Intensity Iv (mcd)		Circuit Common
				IF=mA	Typ.	

0.56" Quadruple Digit LED Display

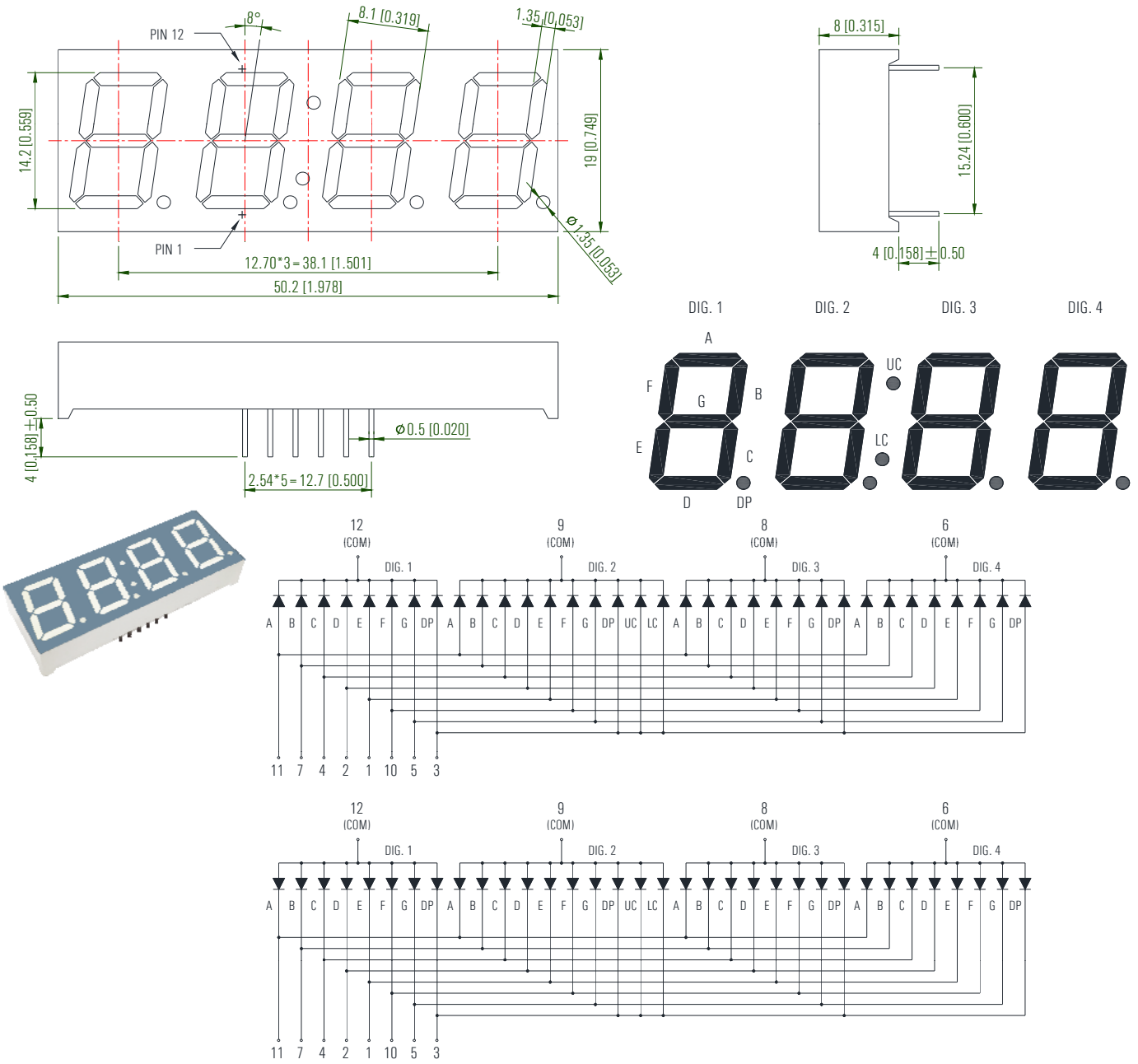

KW4-566CRA	Deep Red	630	Gray	20	32.0	Common Cathode
KW4-566CAA	Orange	605			34.0	
KW4-566CGA	Yellow Green	572			25.0	
KW4-566CGA-G5	Pure Green	525			92.0	
KW4-566CBA	Blue	470			50.0	
KW4-566CWA	White	x=0.30, y=0.31			260.0	
KW4-566ARA	Deep Red	630			32.0	Common Anode
KW4-566AAA	Orange	605			34.0	
KW4-566AGA	Yellow Green	572			25.0	
KW4-566AGA-G5	Pure Green	525			92.0	
KW4-566ABA	Blue	470			50.0	
KW4-566AWA	White	x=0.30, y=0.31			260.0	

Part Number	Emitting Color	λd (nm) / x, y	Face Color	Luminous Intensity Iv (mcd)		Circuit Common
				IF=mA	Typ.	

0.56" Quadruple Digit LED Display

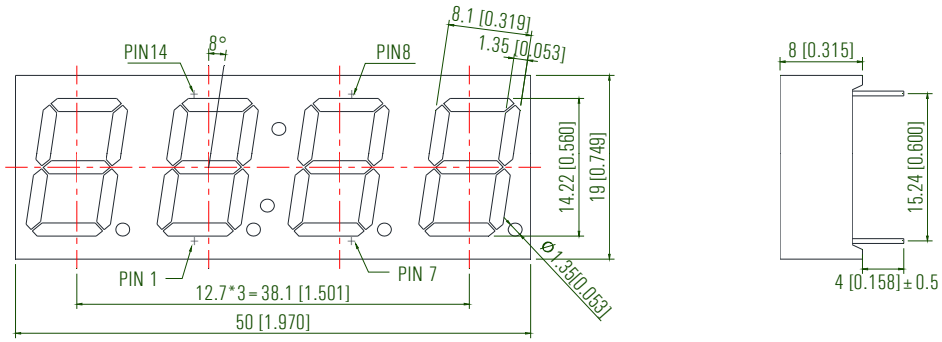

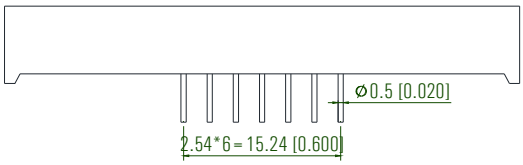

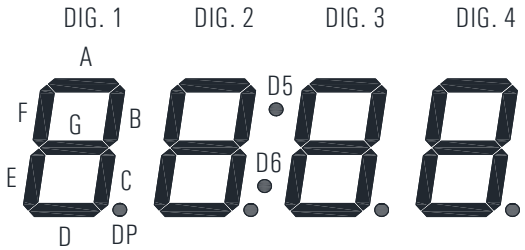

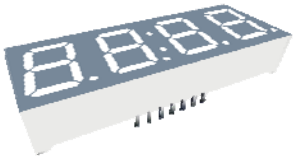

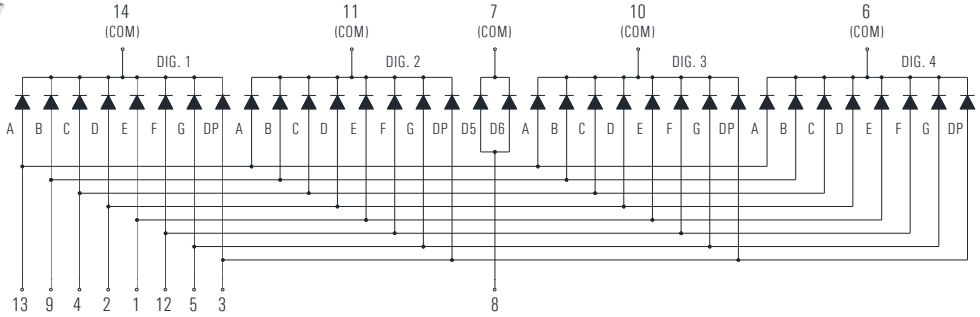

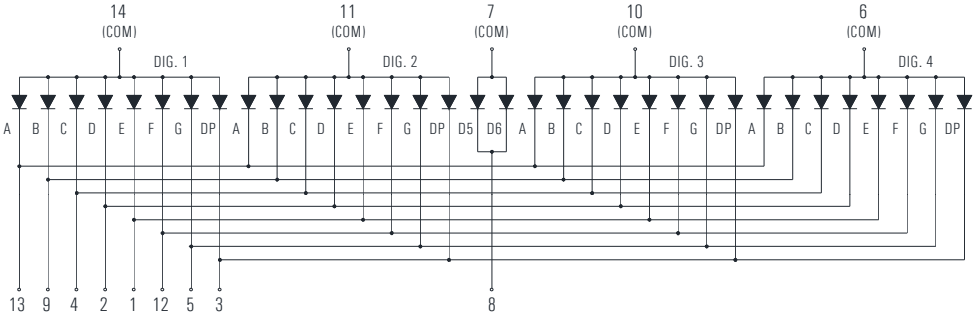

KW4-56NCRA	Deep Red	630	Gray	20	32.0	Common Cathode
KW4-56NCAA	Orange	605			34.0	
KW4-56NCGA	Yellow Green	572			25.0	
KW4-56NCGA-G5	Pure Green	525			92.0	
KW4-56NCBA	Blue	470			50.0	
KW4-56NCWA	White	x=0.30, y=0.31			260.0	
KW4-56NARA	Deep Red	630			32.0	Common Anode
KW4-56NAAA	Orange	605			34.0	
KW4-56NAGA	Yellow Green	572			25.0	
KW4-56NAGA-G5	Pure Green	525			92.0	
KW4-56NABA	Blue	470			50.0	
KW4-56NAWA	White	x=0.30, y=0.31			260.0	

Part Number	Emitting Color	λd (nm) / x, y	Face Color	Luminous Intensity Iv (mcd)		Circuit Common
				IF=mA	Typ.	

0.80" Quadruple Digit LED Display

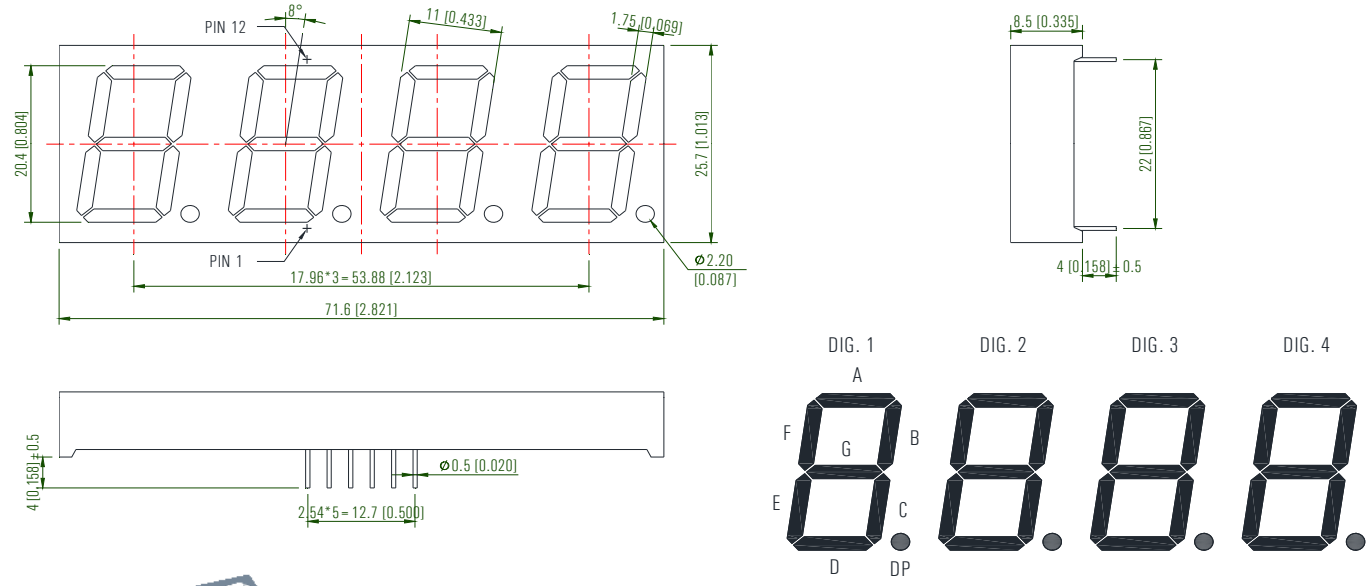

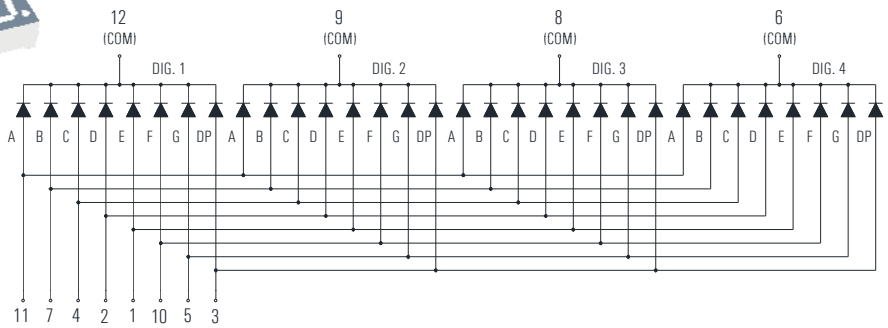

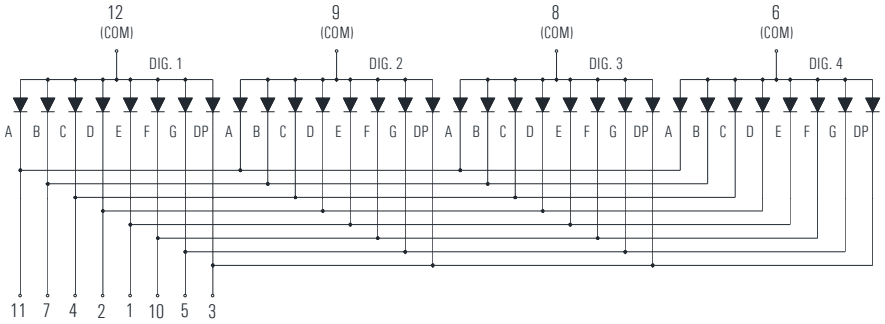

KW4-802CRA	Deep Red	630	Gray	20	36.0	Common Cathode
KW4-802CAA	Orange	605			36.0	
KW4-802CGA	Yellow Green	572			26.0	
KW4-802CGA-G5	Pure Green	525			100.0	
KW4-802CBA	Blue	470			56.0	
KW4-802CWA	White	x=0.30, y=0.31			270.0	
KW4-802ARA	Deep Red	630			36.0	Common Anode
KW4-802AAA	Orange	605			36.0	
KW4-802AGA	Yellow Green	572			26.0	
KW4-802AGA-G5	Pure Green	525			100.0	
KW4-802ABA	Blue	470			56.0	
KW4-802AWA	White	x=0.30, y=0.31			270.0	

Part Number	Emitting Color	λd (nm) / x, y	Face Color	Luminous Intensity Iv (mcd)		Circuit Common
				IF=mA	Typ.	

0.80" Quadruple Digit LED Display

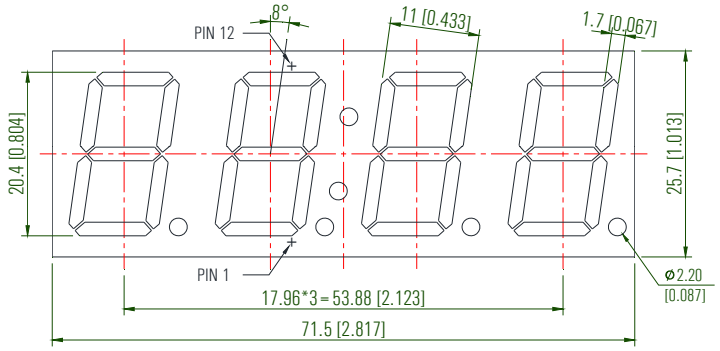

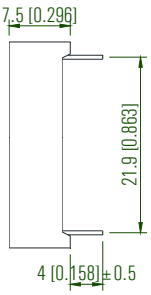

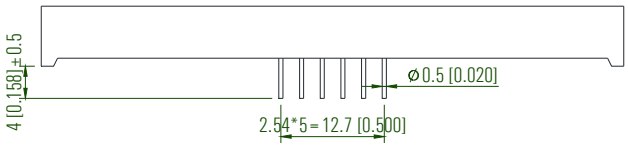

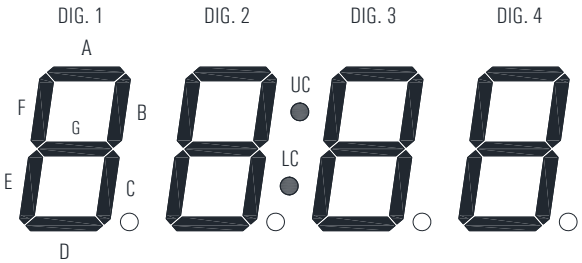

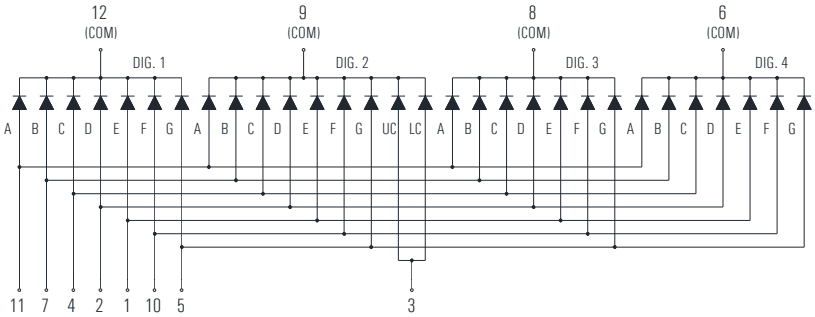

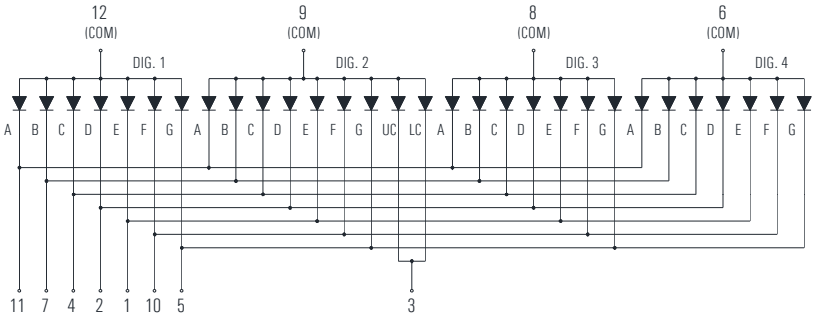

KW4-804CRA	Deep Red	630	Gray	20	36.0	Common Cathode
KW4-804CAA	Orange	605			36.0	
KW4-804CGA	Yellow Green	572			26.0	
KW4-804CGA-G5	Pure Green	525			100.0	
KW4-804CBA	Blue	470			56.0	
KW4-804CWA	White	x=0.30, y=0.31			270.0	
KW4-804ARA	Deep Red	630			36.0	Common Anode
KW4-804AAA	Orange	605			36.0	
KW4-804AGA	Yellow Green	572			26.0	
KW4-804AGA-G5	Pure Green	525			100.0	
KW4-804ABA	Blue	470			56.0	
KW4-804AWA	White	x=0.30, y=0.31			270.0	

Part Number	Emitting Color	λd (nm) / x, y	Face Color	Luminous Intensity Iv (mcd)		Circuit Common
				IF=mA	Typ.	

0.94" Quadruple Digit LED Display

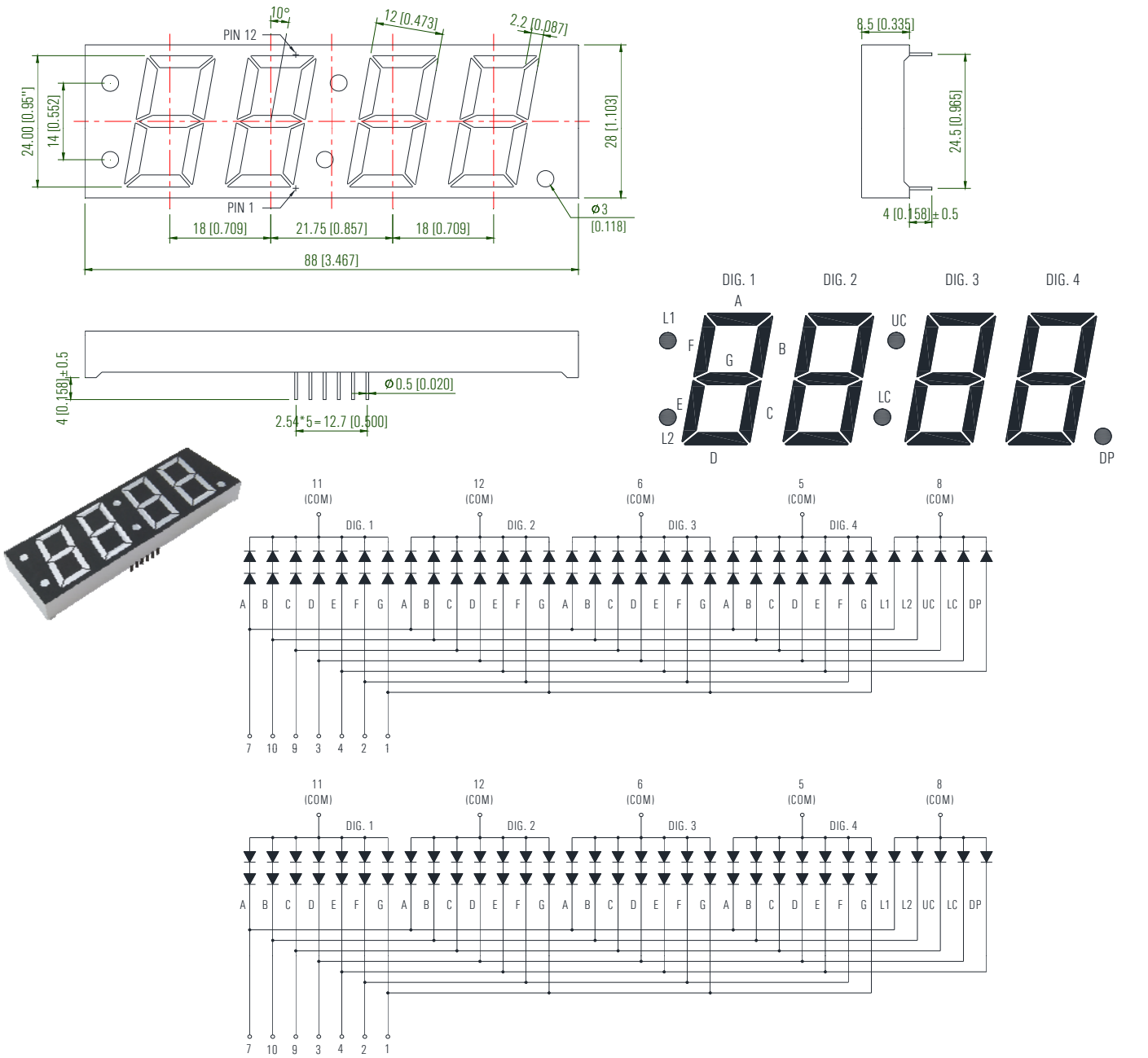

KW4-8828CRB	Deep Red	630	Black	20	40.0	Common Cathode
KW4-8828CAB	Orange	605			38.0	
KW4-8828CGB	Yellow Green	572			28.0	
KW4-8828CGB-G5	Pure Green	525			108.0	
KW4-8828CBB	Blue	470			58.0	
KW4-8828CWB	White	x=0.30, y=0.31			280.0	
KW4-8828ARB	Deep Red	630			40.0	Common Anode
KW4-8828AAB	Orange	605			38.0	
KW4-8828AGB	Yellow Green	572			28.0	
KW4-8828AGB-G5	Pure Green	525			108.0	
KW4-8828ABB	Blue	470			58.0	
KW4-8828AWB	White	x=0.30, y=0.31			280.0	

Part Number	Emitting Color	λd (nm) / x, y	Face Color	Luminous Intensity Iv (mcd)		Circuit Common
				IF=mA	Typ.	

0.23" Quintuple Digit LED Display

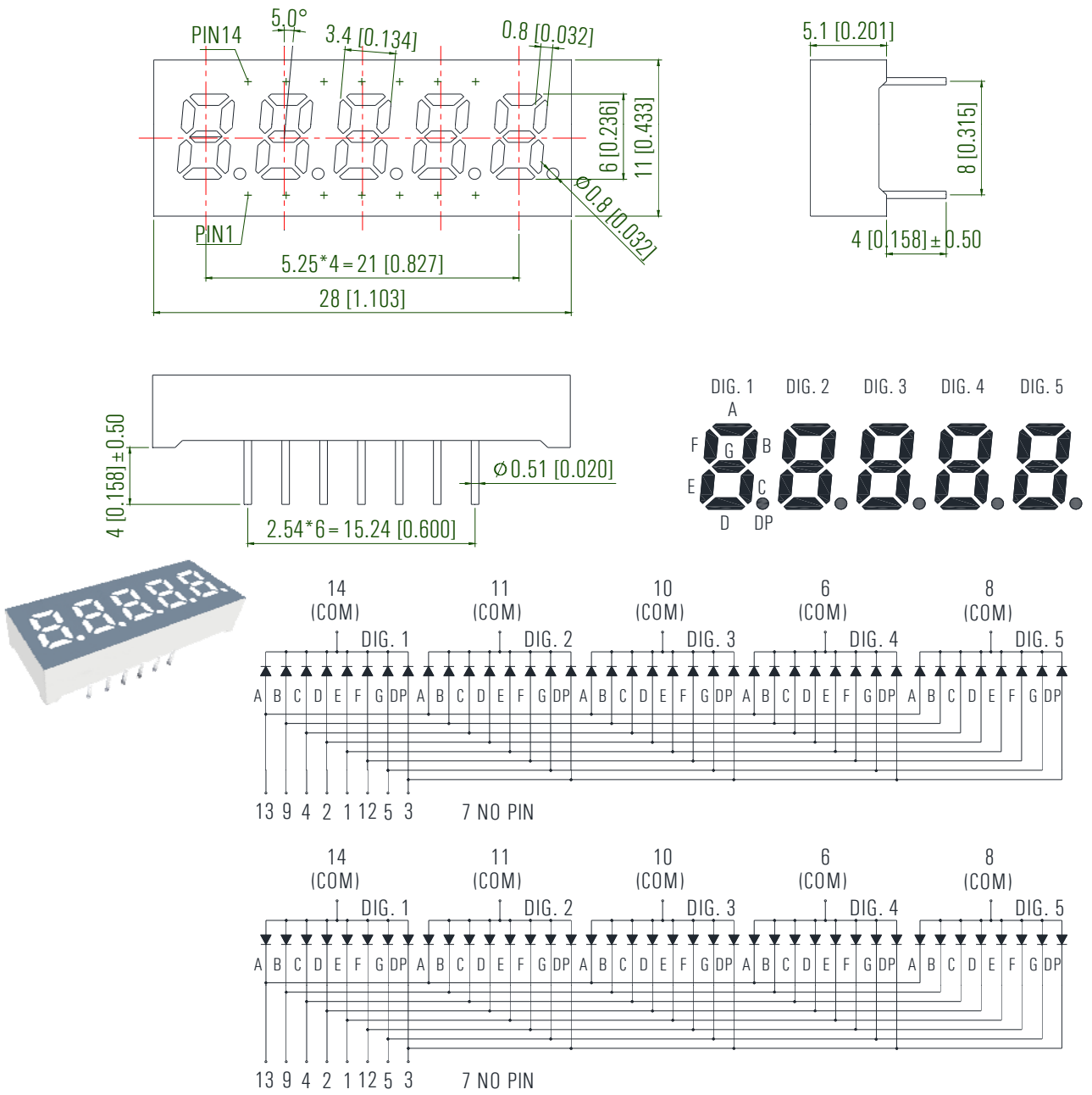

KW5-231CRA	Deep Red	630	Gray	20	20.0	Common Cathode
KW5-231CAA	Orange	605			24.0	
KW5-231CGA	Yellow Green	572			18.0	
KW5-231CGA-G5	Pure Green	525			70.0	
KW5-231CBA	Blue	470			38.0	
KW5-231CWA-Y	White	x=0.30, y=0.31			116.0	
KW5-231ARA	Deep Red	630			20.0	Common Anode
KW5-231AAA	Orange	605			24.0	
KW5-231AGA	Yellow Green	572			18.0	
KW5-231AGA-G5	Pure Green	525			70.0	
KW5-231ABA	Blue	470			38.0	
KW5-231AWA-Y	White	x=0.30, y=0.31			116.0	

Part Number	Emitting Color	λd (nm) / x, y	Face Color	Luminous Intensity Iv (mcd)		Circuit Common
				IF=mA	Typ.	

0.32" Quintuple Digit LED Display

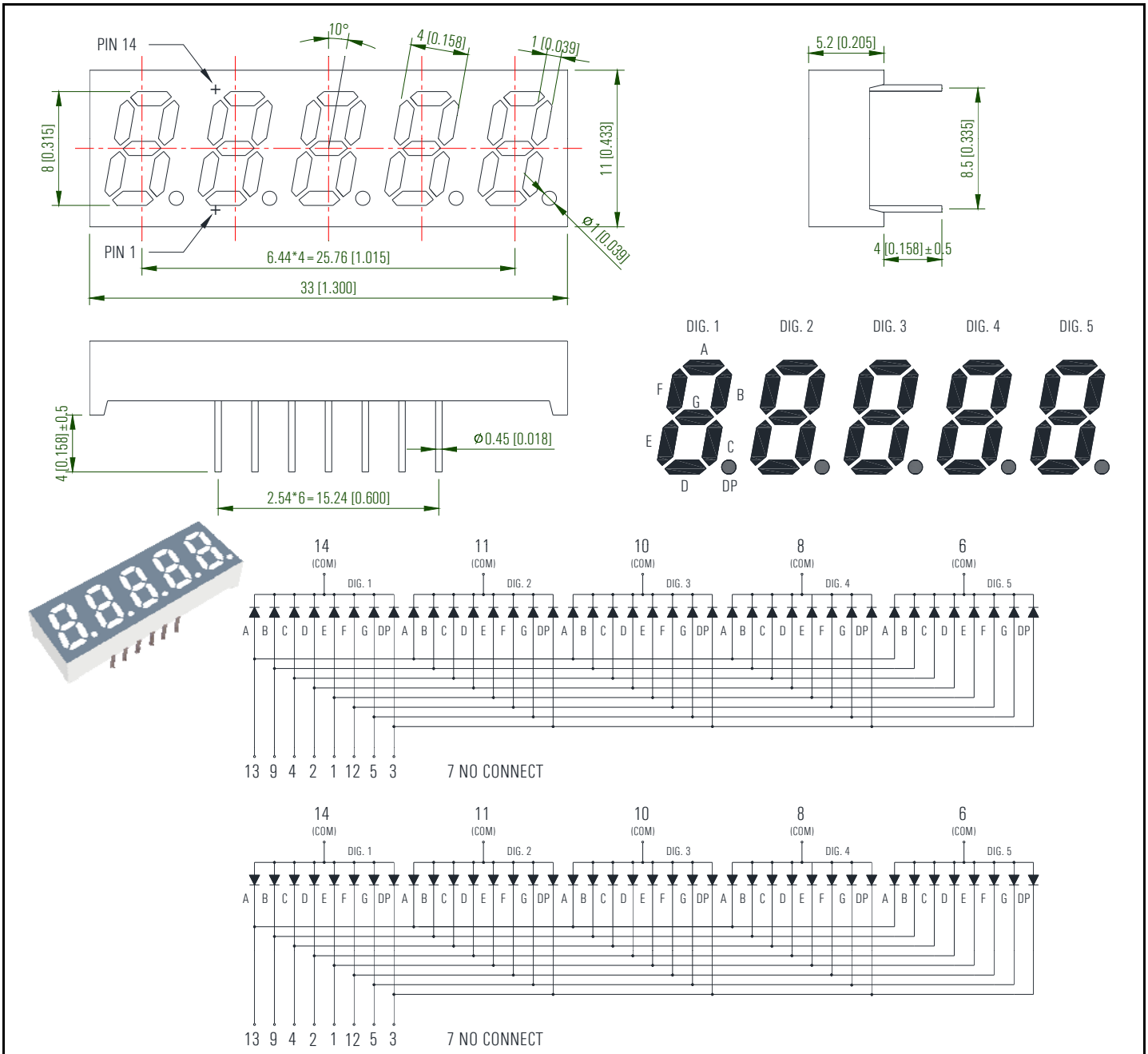

KW5-321CRA	Deep Red	630	Gray	20	22.0	Common Cathode
KW5-321CAA	Orange	605			24.0	
KW5-321CGA	Yellow Green	572			18.0	
KW5-321CGA-G5	Pure Green	525			72.0	
KW5-321CBA	Blue	470			40.0	
KW5-321CWA-Y	White	x=0.30, y=0.31			120.0	
KW5-321ARA	Deep Red	630			22.0	Common Anode
KW5-321AAA	Orange	605			24.0	
KW5-321AGA	Yellow Green	572			18.0	
KW5-321AGA-G5	Pure Green	525			72.0	
KW5-321ABA	Blue	470			40.0	
KW5-321AWA-Y	White	x=0.30, y=0.31			120.0	

Part Number	Emitting Color	λd (nm) / x, y	Face Color	Luminous Intensity Iv (mcd)		Circuit Common
				IF=mA	Typ.	

0.36" Quintuple Digit LED Display

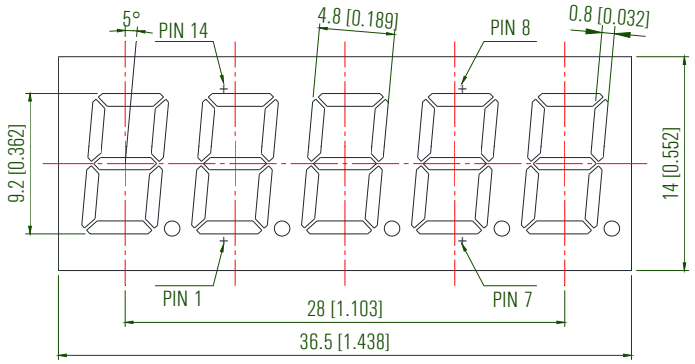

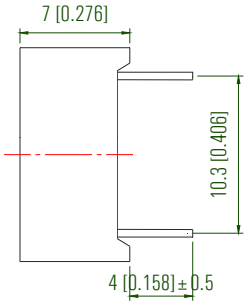

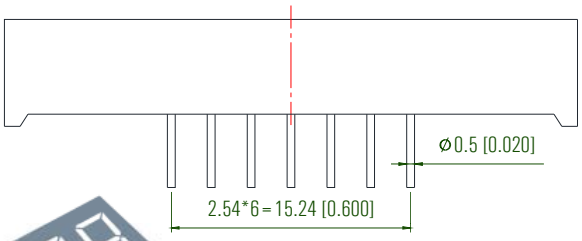

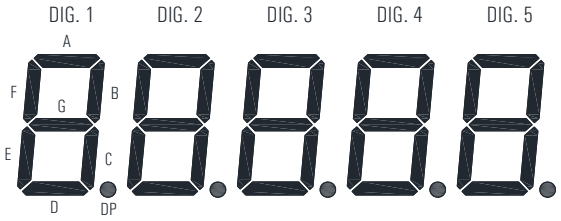

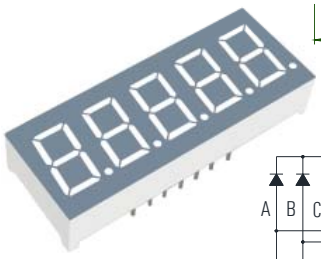

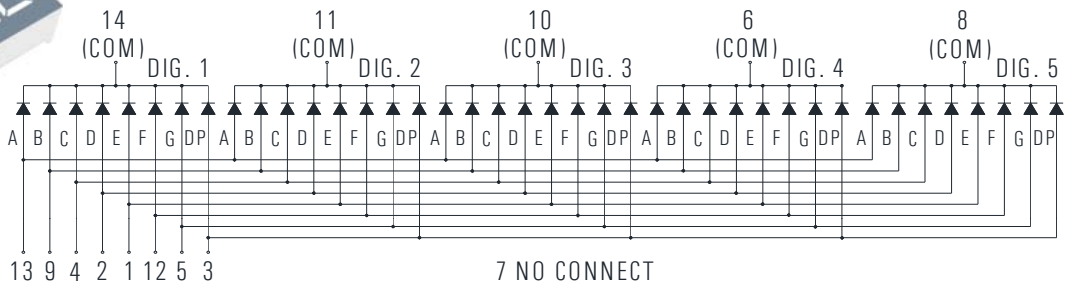

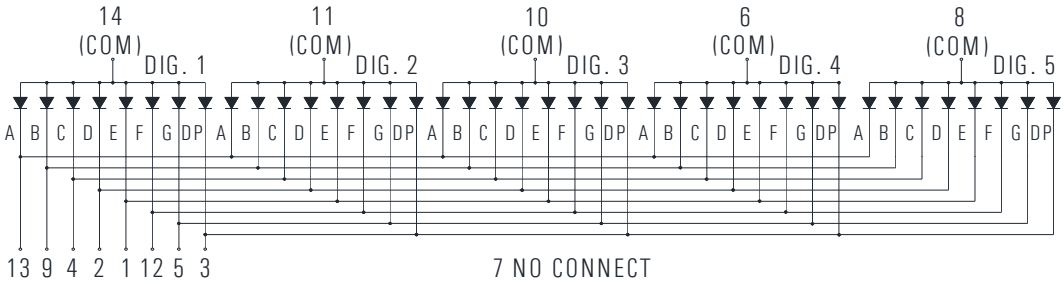

KW5-361CRA	Deep Red	630	Gray	20	24.0	Common Cathode
KW5-361CAA	Orange	605			26.0	
KW5-361CGA	Yellow Green	572			20.0	
KW5-361CGA-G5	Pure Green	525			92.0	
KW5-361CBA	Blue	470			44.0	
KW5-361CWA-Y	White	x=0.30, y=0.31			128.0	
KW5-361ARA	Deep Red	630			24.0	Common Anode
KW5-361AAA	Orange	605			26.0	
KW5-361AGA	Yellow Green	572			20.0	
KW5-361AGA-G5	Pure Green	525			92.0	
KW5-361ABA	Blue	470			44.0	
KW5-361AWA-Y	White	x=0.30, y=0.31			128.0	

Part Number	Emitting Color	λd (nm) / x, y	Face Color	Luminous Intensity Iv (mcd)		Circuit Common
				IF=mA	Typ.	

0.40" Quintuple Digit LED Display

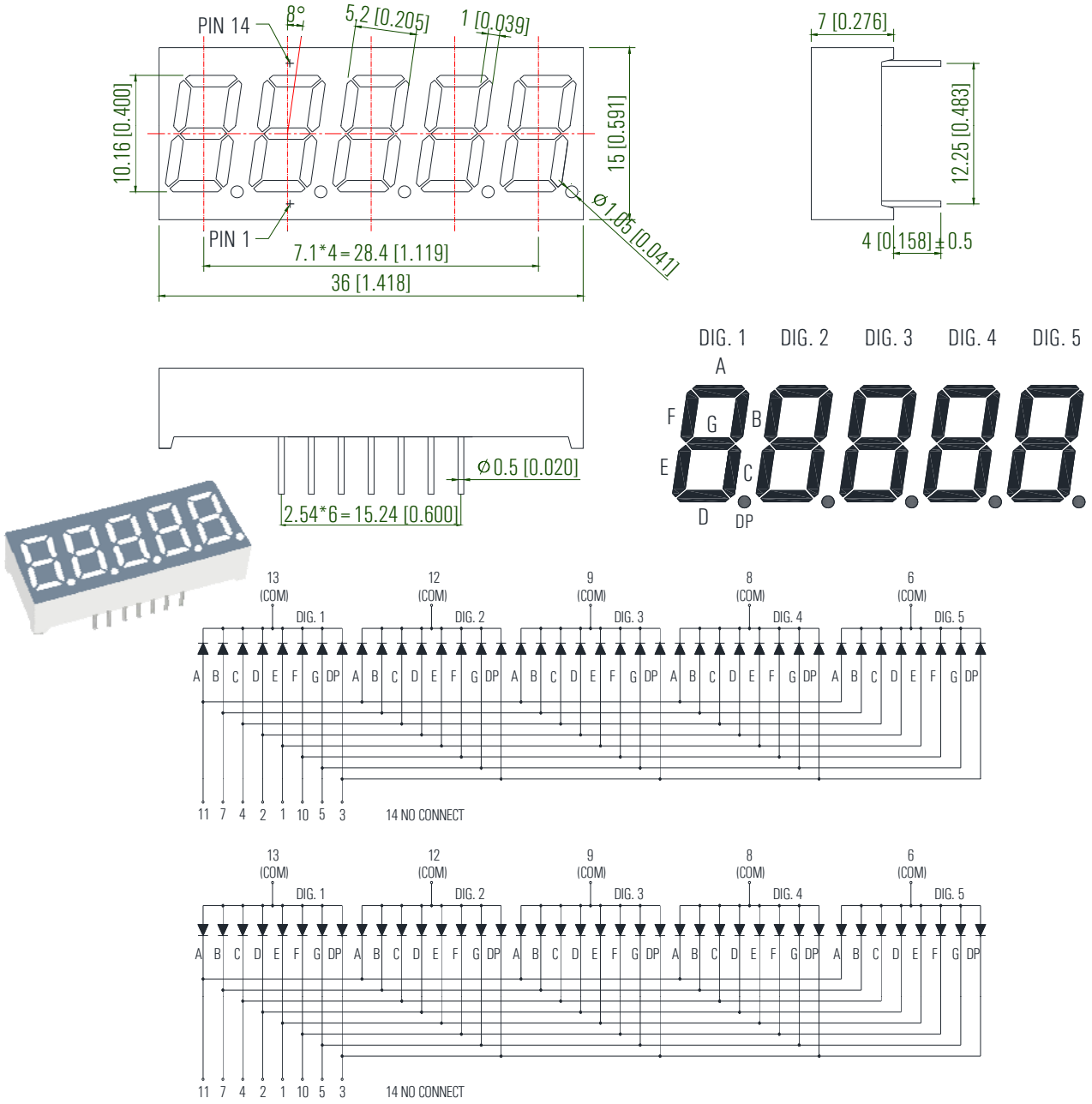

KW5-401CRA	Deep Red	630	Gray	20	25.0	Common Cathode
KW5-401CAA	Orange	605			27.0	
KW5-401CGA	Yellow Green	572			22.0	
KW5-401CGA-G5	Pure Green	525			96.0	
KW5-401CBA	Blue	470			46.0	
KW5-401CWA	White	x=0.27, y=0.28			132.0	
KW5-401ARA	Deep Red	630			25.0	Common Anode
KW5-401AAA	Orange	605			27.0	
KW5-401AGA	Yellow Green	572			22.0	
KW5-401AGA-G5	Pure Green	525			96.0	
KW5-401ABA	Blue	470			46.0	
KW5-401AWA	White	x=0.27, y=0.28			132.0	

Part Number	Emitting Color	λd (nm) / x, y	Face Color	Luminous Intensity Iv (mcd)		Circuit Common
				IF=mA	Typ.	

0.56" Quintuple Digit LED Display

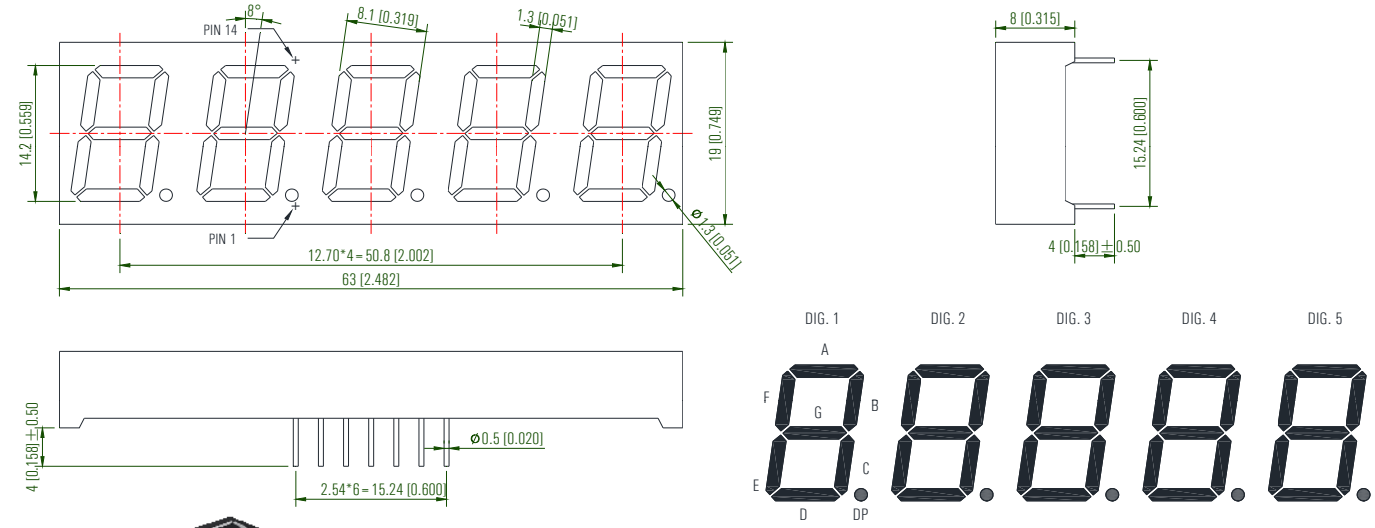

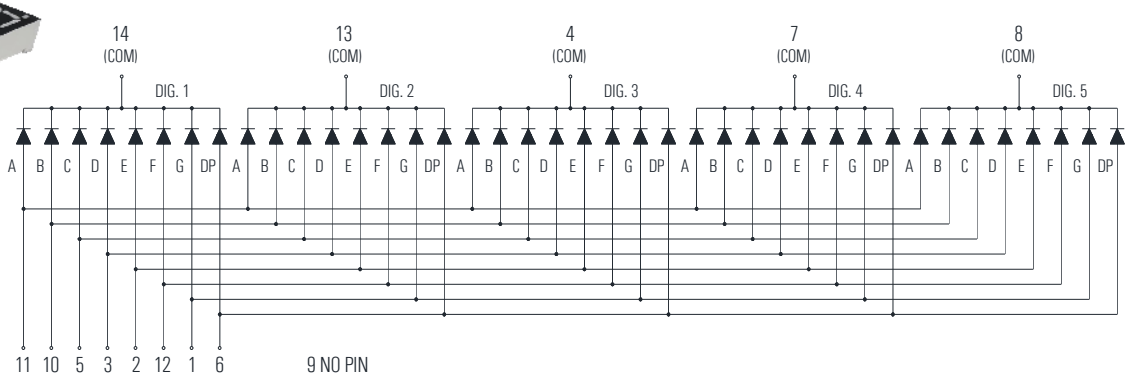

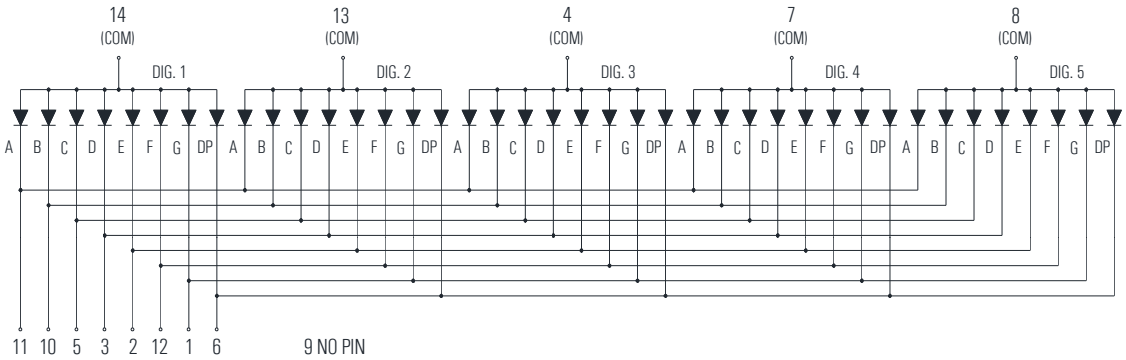

KW5-561CRB	Deep Red	630	Black	20	32.0	Common Cathode
KW5-561CAB	Orange	605			34.0	
KW5-561CGB	Yellow Green	572			25.0	
KW5-561CGB-G5	Pure Green	525			92.0	
KW5-561CBB	Blue	470			50.0	
KW5-561CWB	White	x=0.30, y=0.31			260.0	
KW5-561ARB	Deep Red	630			32.0	Common Anode
KW5-561AAB	Orange	605			34.0	
KW5-561AGB	Yellow Green	572			25.0	
KW5-561AGB-G5	Pure Green	525			92.0	
KW5-561ABB	Blue	470			50.0	
KW5-561AWB	White	x=0.30, y=0.31			260.0	

Part Number	Emitting Color	λd (nm) / x, y	Face Color	Luminous Intensity Iv (mcd)		Circuit Common
				IF=mA	Typ.	

0.30" Six Digit LED Display

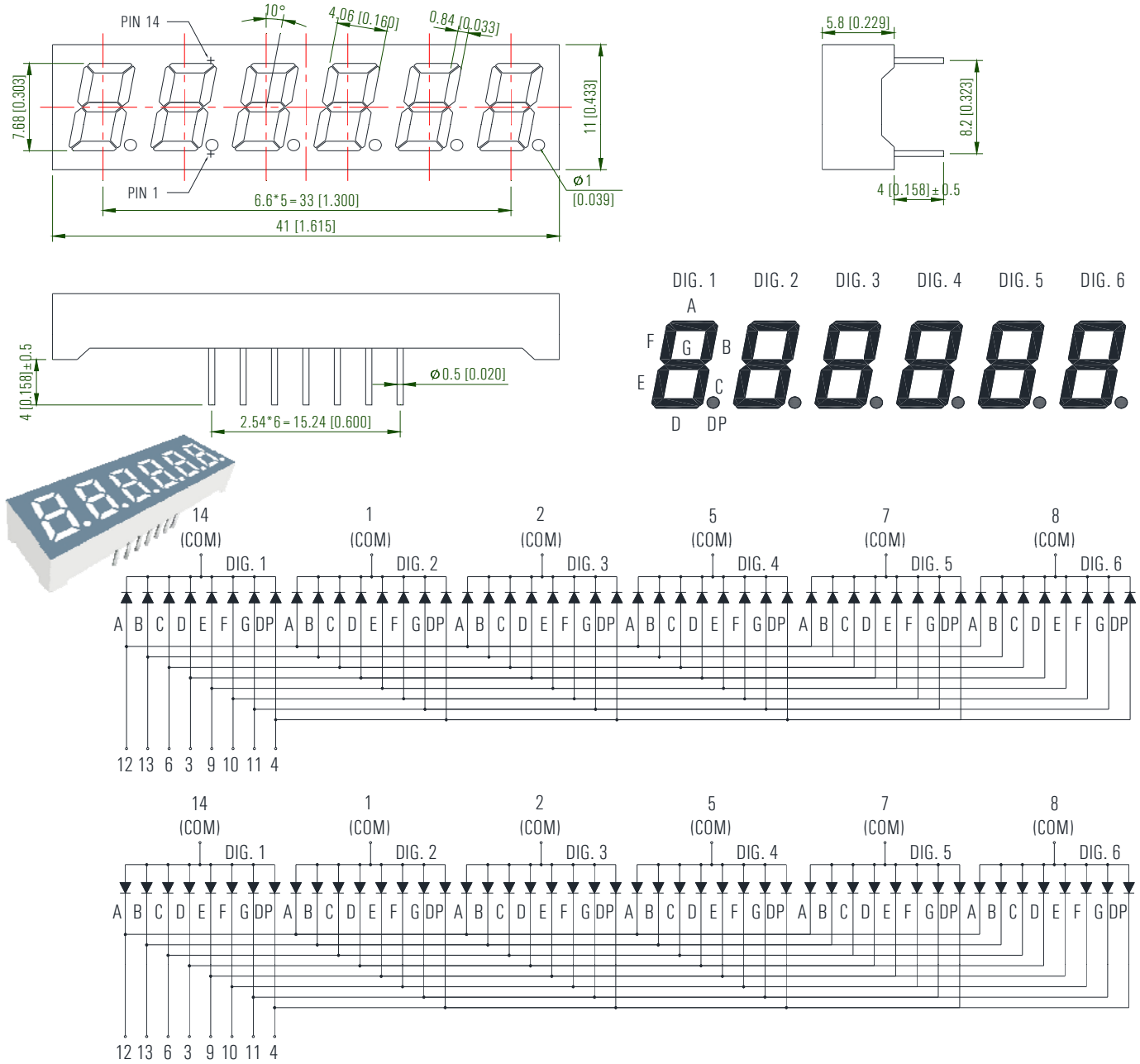

KW6-301CRA	Deep Red	630	Gray	20	24.0	Common Cathode
KW6-301CAA	Orange	605			30.0	
KW6-301CGA	Yellow Green	572			22.0	
KW6-301CGA-G5	Pure Green	525			84.0	
KW6-301CBA	Blue	470			46.0	
KW6-301CWA-Y	White	x=0.27, y=0.28			136.0	
KW6-301ARA	Deep Red	630			24.0	Common Anode
KW6-301AAA	Orange	605			30.0	
KW6-301AGA	Yellow Green	572			22.0	
KW6-301AGA-G5	Pure Green	525			84.0	
KW6-301ABA	Blue	470			46.0	
KW6-301AWA-Y	White	x=0.27, y=0.28			136.0	

Part Number	Emitting Color	λd (nm) / x, y	Face Color	Luminous Intensity Iv (mcd)		Circuit Common
				IF=mA	Typ.	

0.70" 5×7 Single Color Dot Matrix

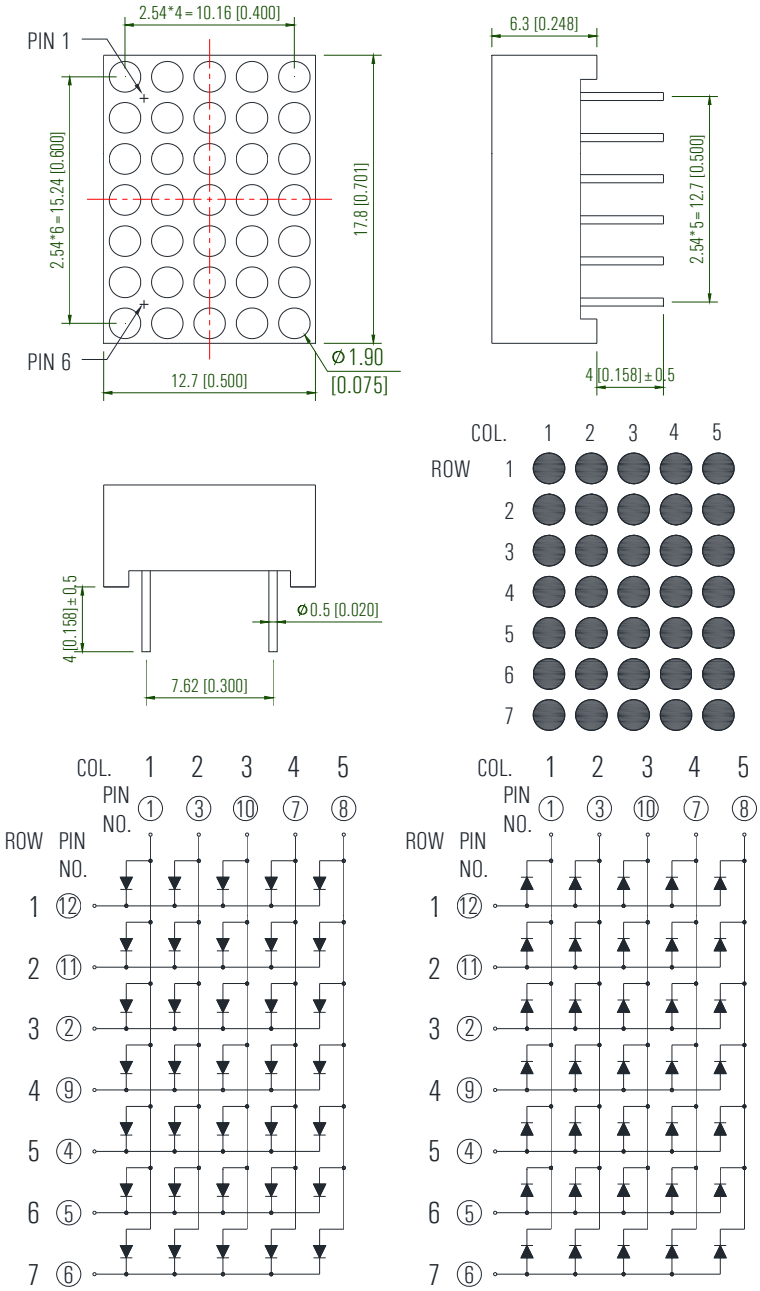

KWM-20571CRA	Deep Red	630	Gray	20	40.0	Common Row Cathode
KWM-20571CAA	Orange	605			40.0	
KWM-20571CGA	Yellow Green	572			30.0	
KWM-20571CGA-G5	Pure Green	525			80.0	
KWM-20571CBA	Blue	470			50.0	
KWM-20571CWA	White	x=0.27, y=0.28			90.0	
KWM-20571ARA	Deep Red	630			40.0	Common Row Anode
KWM-20571AAA	Orange	605			40.0	
KWM-20571AGA	Yellow Green	572			30.0	
KWM-20571AGA-G5	Pure Green	525			80.0	
KWM-20571ABA	Blue	470			50.0	
KWM-20571AWA	White	x=0.27, y=0.28			90.0	

Part Number	Emitting Color	λd (nm) / x, y	Face Color	Luminous Intensity Iv (mcd)		Circuit Common
				IF=mA	Typ.	

0.8" 8×8 Single Color Dot Matrix

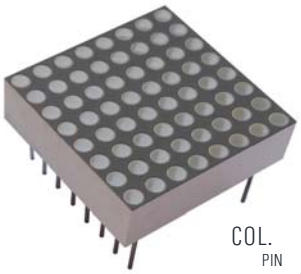

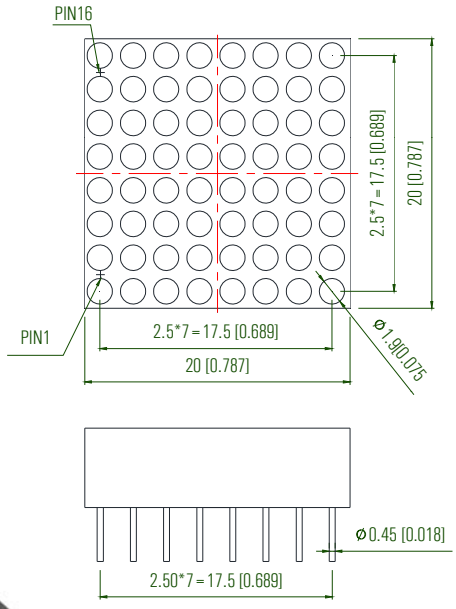

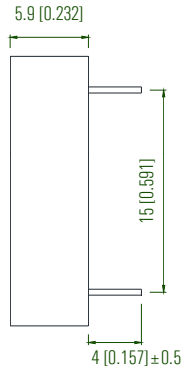

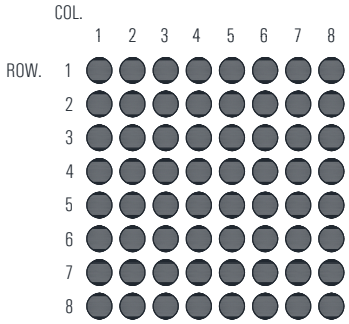

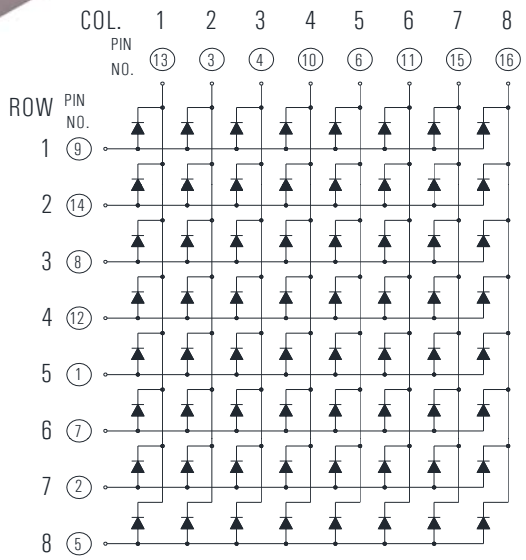

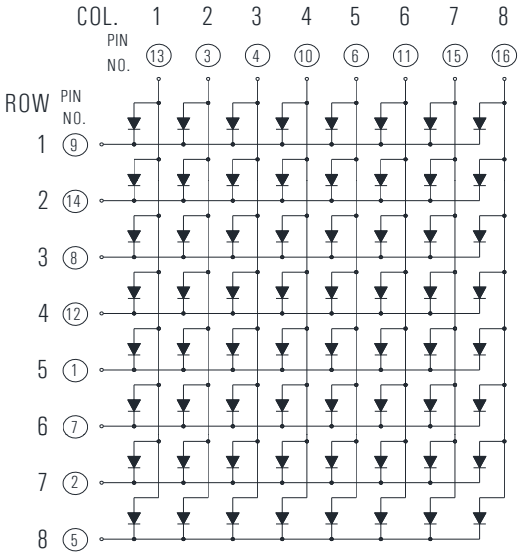

KWM-20881CRA	Deep Red	630	Gray	20	40.0	Common Row Cathode
KWM-20881CAA	Orange	605			40.0	
KWM-20881CGA	Yellow Green	572			30.0	
KWM-20881CGA-G5	Pure Green	525			80.0	
KWM-20881CBA	Blue	470			60.0	
KWM-20881CWA	White	x=0.27, y=0.28			260.0	
KWM-20881ARA	Deep Red	630			40.0	Common Row Anode
KWM-20881AAA	Orange	605			40.0	
KWM-20881AGA	Yellow Green	572			30.0	
KWM-20881AGA-G5	Pure Green	525			80.0	
KWM-20881ABA	Blue	470			60.0	
KWM-20881AWA	White	x=0.27, y=0.28			260.0	

Part Number	Emitting Color	λd (nm) / x, y	Face Color	Luminous Intensity Iv (mcd)		Circuit Common
				IF=mA	Typ.	

1.54" 5×7 Single Color Dot Matrix

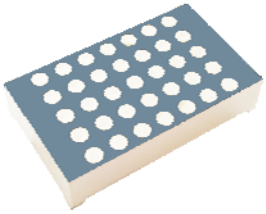

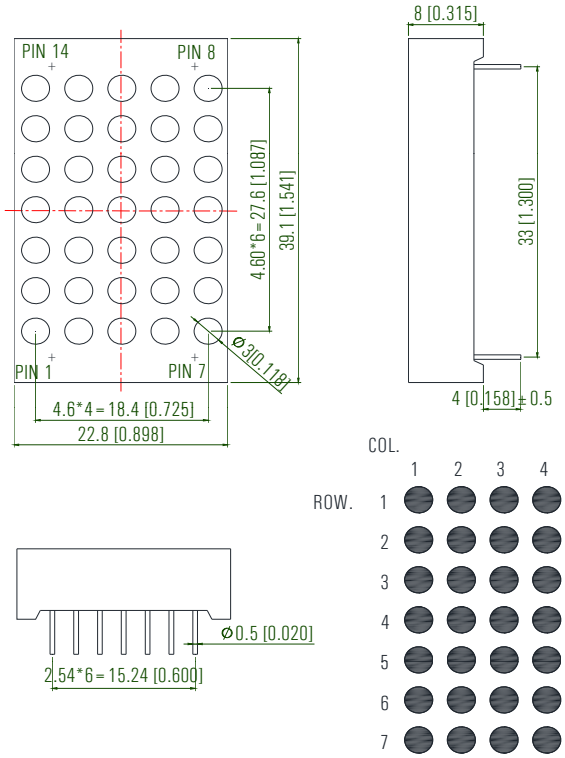

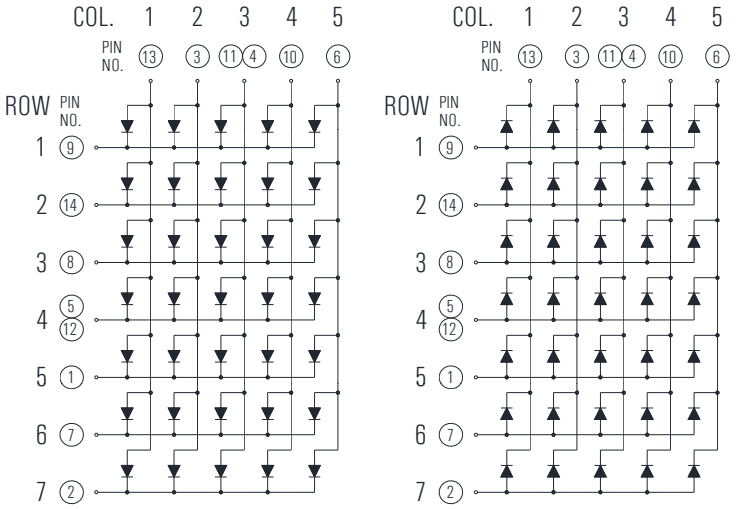

KWM-30571CRA	Deep Red	630	Gray	20	50.0	Common Row Cathode
KWM-30571CAA	Orange	605			46.0	
KWM-30571CGA	Yellow Green	572			34.0	
KWM-30571CGA-G5	Pure Green	525			80.0	
KWM-30571CBA	Blue	470			60.0	
KWM-30571CWA	White	x=0.30, y=0.31			260.0	
KWM-30571ARA	Deep Red	630			50.0	Common Row Anode
KWM-30571AAA	Orange	605			46.0	
KWM-30571AGA	Yellow Green	572			34.0	
KWM-30571AGA-G5	Pure Green	525			80.0	
KWM-30571ABA	Blue	470			60.0	
KWM-30571AWA	White	x=0.30, y=0.31			260.0	

Part Number	Emitting Color	λd (nm) / x, y	Face Color	Luminous Intensity Iv (mcd)		Circuit Common
				IF=mA	Typ.	

1.5" 5×8 Single Color Dot Matrix

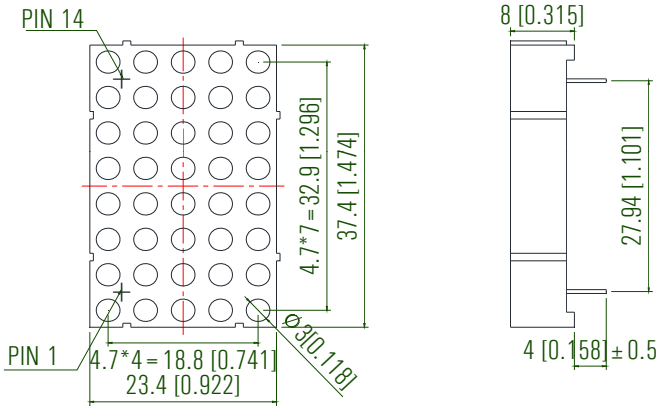

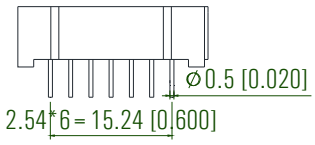

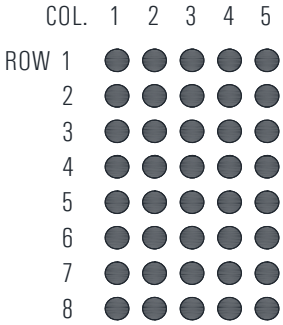

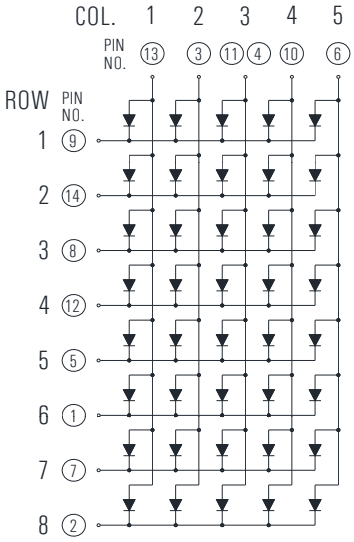

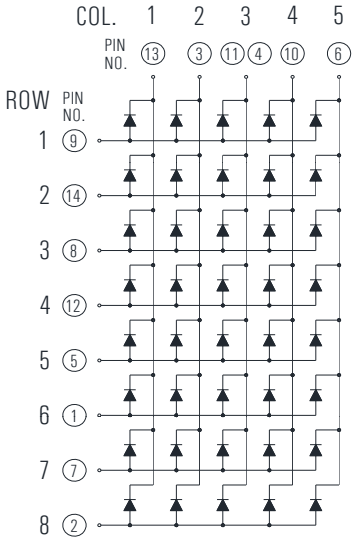

KWM-30581CRA	Deep Red	630	Gray	20	50.0	Common Row Cathode
KWM-30581CAA	Orange	605			46.0	
KWM-30581CGA	Yellow Green	572			34.0	
KWM-30581CGA-G5	Pure Green	525			80.0	
KWM-30581CBA	Blue	470			60.0	
KWM-30581CWA	White	x=0.30, y=0.31			260.0	
KWM-30581ARA	Deep Red	630			50.0	Common Row Anode
KWM-30581AAA	Orange	605			46.0	
KWM-30581AGA	Yellow Green	572			34.0	
KWM-30581AGA-G5	Pure Green	525			80.0	
KWM-30581ABA	Blue	470			60.0	
KWM-30581AWA	White	x=0.30, y=0.31			260.0	

Part Number	Emitting Color	λd (nm) / x, y	Face Color	Luminous Intensity Iv (mcd)		Circuit Common
				IF=mA	Typ.	

1.2" 8×8 Single Color Dot Matrix

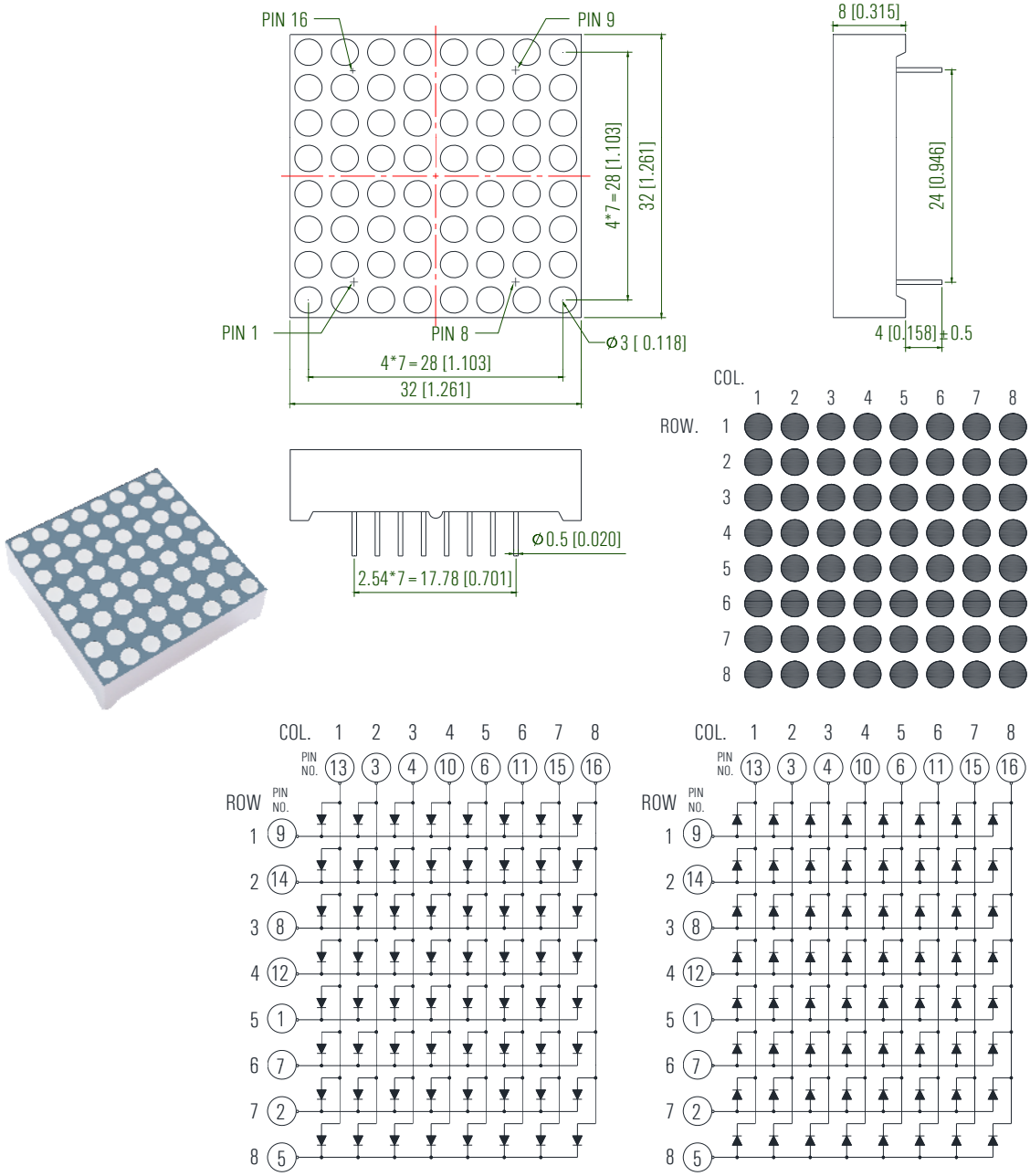

KWM-30881CRA	Deep Red	630	Gray	20	50.0	Common Row Cathode
KWM-30881CAA	Orange	605			46.0	
KWM-30881CGA	Yellow Green	572			34.0	
KWM-30881CGA-G5	Pure Green	525			80.0	
KWM-30881CBA	Blue	470			60.0	
KWM-30881CWA	White	x=0.30, y=0.31			260.0	
KWM-30881ARA	Deep Red	630			50.0	Common Row Anode
KWM-30881AAA	Orange	605			46.0	
KWM-30881AGA	Yellow Green	572			34.0	
KWM-30881AGA-G5	Pure Green	525			80.0	
KWM-30881ABA	Blue	470			60.0	
KWM-30881AWA	White	x=0.30, y=0.31			260.0	

Part Number	Emitting Color	λd (nm) / x, y	Face Color	Luminous Intensity Iv (mcd)		Circuit Common
				IF=mA	Typ.	

1.5" 8×8 Single Color Dot Matrix

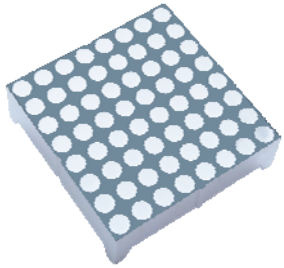

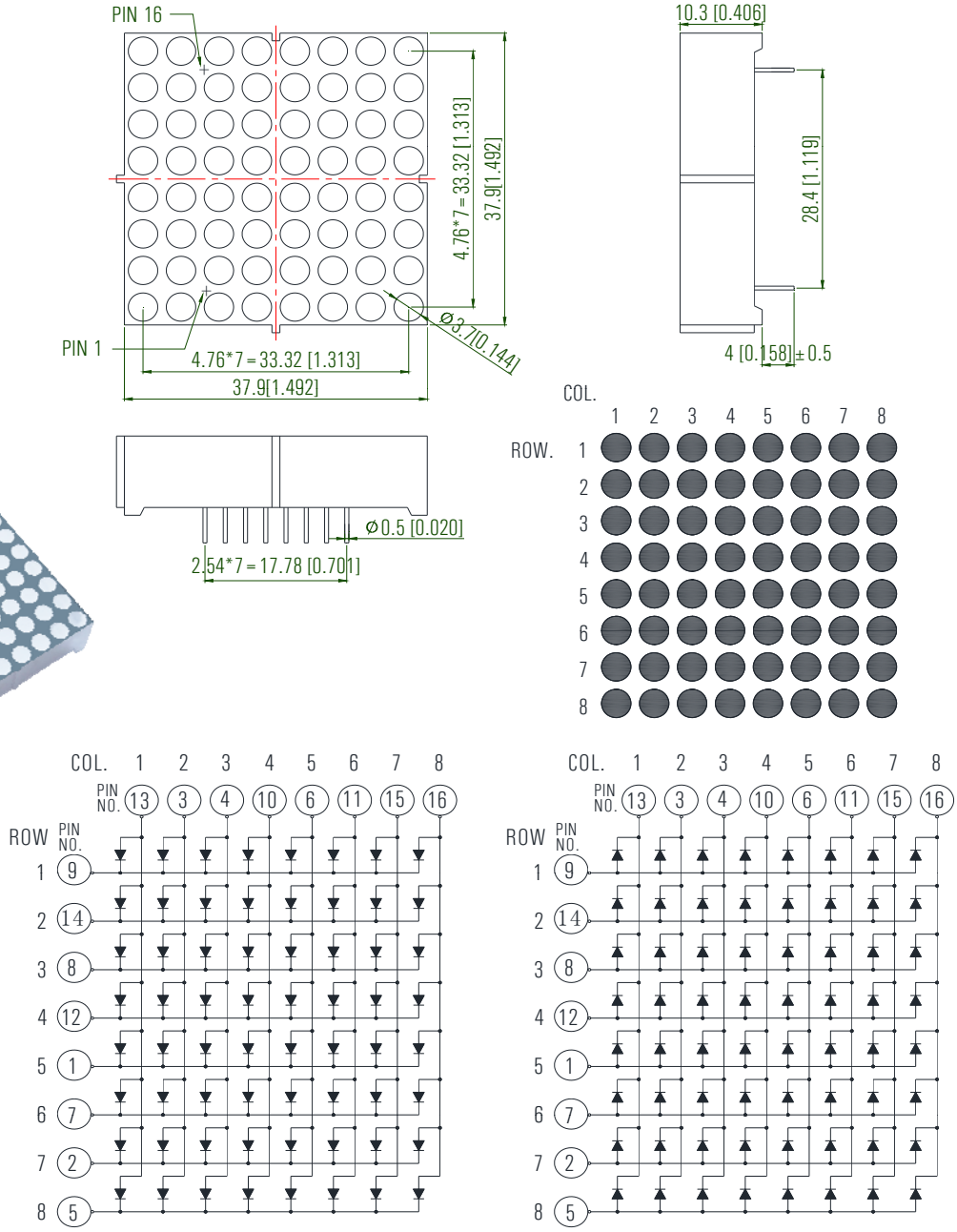

KWM-37881CRA	Deep Red	630	Gray	20	50.0	Common Row Cathode
KWM-37881CAA	Orange	605			46.0	
KWM-37881CGA	Yellow Green	572			34.0	
KWM-37881CGA-G5	Pure Green	525			80.0	
KWM-37881CBA	Blue	470			60.0	
KWM-37881CWA	White	x=0.30, y=0.31			260.0	
KWM-37881ARA	Deep Red	630			50.0	Common Row Anode
KWM-37881AAA	Orange	605			46.0	
KWM-37881AGA	Yellow Green	572			34.0	
KWM-37881AGA-G5	Pure Green	525			80.0	
KWM-37881ABA	Blue	470			60.0	
KWM-37881AWA	White	x=0.30, y=0.31			260.0	

Part Number	Emitting Color	λd (nm) / x, y	Face Color	Luminous Intensity Iv (mcd)		Circuit Common
				IF=mA	Typ.	

2.0" 5×7 Single Color Dot Matrix

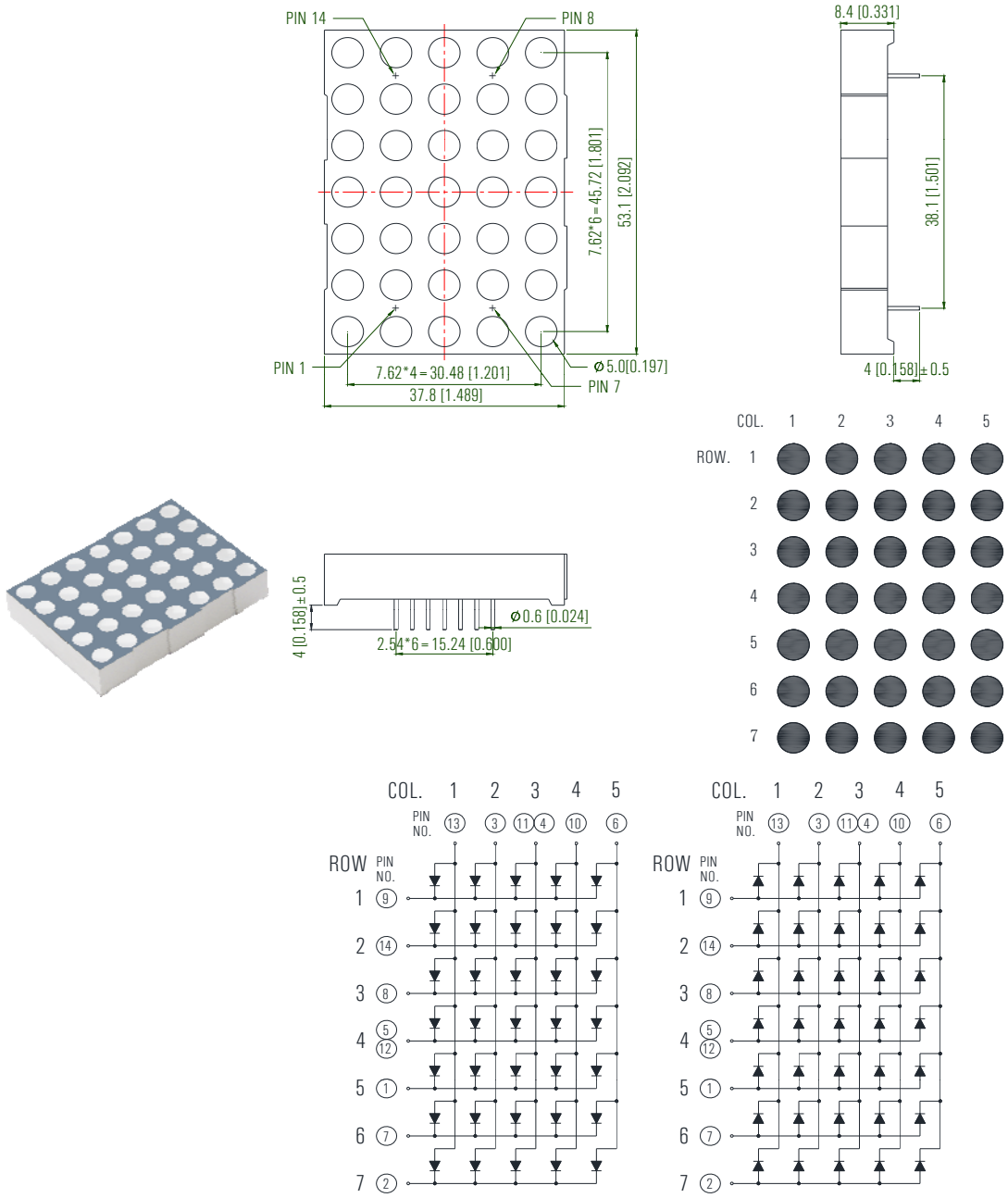

KWM-50571CRA	Deep Red	630	Gray	20	60.0	Common Row Cathode
KWM-50571CAA	Orange	605			50.0	
KWM-50571CGA	Yellow Green	572			36.0	
KWM-50571CGA-G5	Pure Green	525			90.0	
KWM-50571CBA	Blue	470			64.0	
KWM-50571CWA	White	x=0.30, y=0.31			270.0	
KWM-50571ARA	Deep Red	630			60.0	Common Row Anode
KWM-50571AAA	Orange	605			50.0	
KWM-50571AGA	Yellow Green	572			36.0	
KWM-50571AGA-G5	Pure Green	525			90.0	
KWM-50571ABA	Blue	470			64.0	
KWM-50571AWA	White	x=0.30, y=0.31			270.0	

Part Number	Emitting Color	λd (nm) / x, y	Face Color	Luminous Intensity Iv (mcd)		Circuit Common
				IF=mA	Typ.	

2.4" 5×8 Single Color Dot Matrix

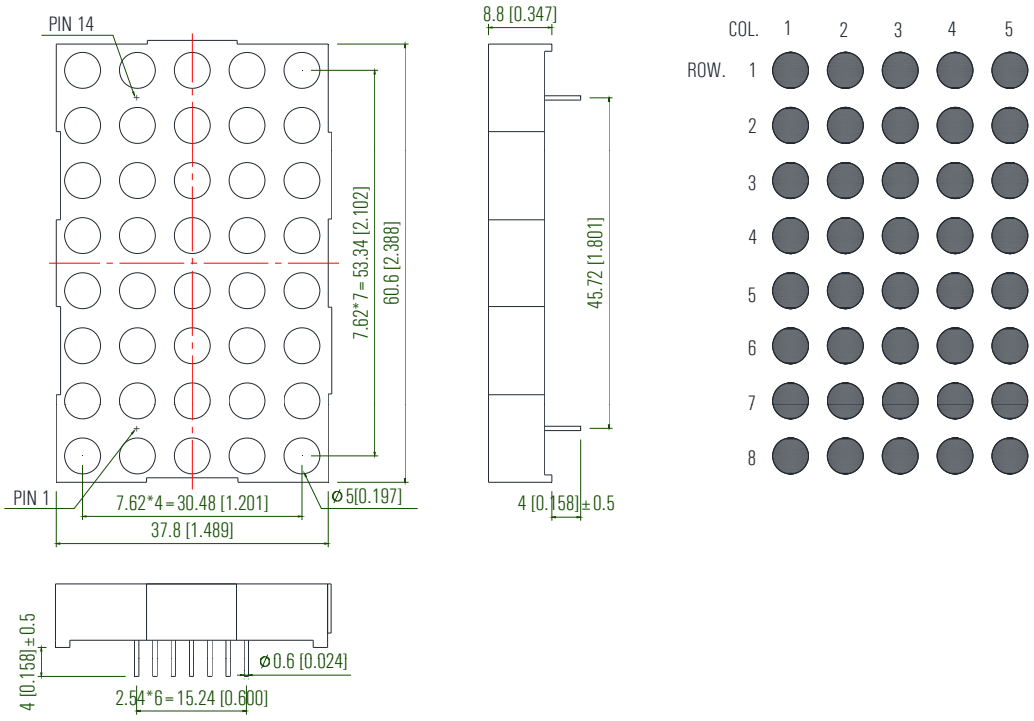

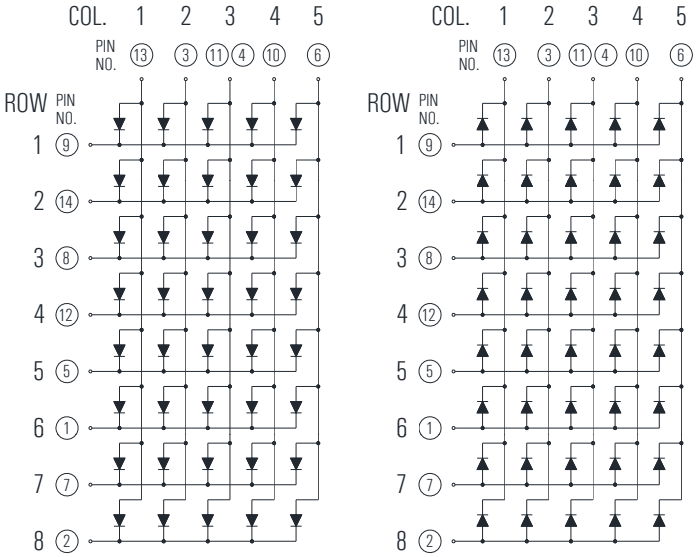

KWM-50581CRA	Deep Red	630	Gray	20	60.0	Common Row Cathode
KWM-50581CAA	Orange	605			50.0	
KWM-50581CGA	Yellow Green	572			36.0	
KWM-50581CGA-G5	Pure Green	525			90.0	
KWM-50581CBA	Blue	470			64.0	
KWM-50581CWA	White	x=0.30, y=0.31			270.0	
KWM-50581ARA	Deep Red	630			60.0	Common Row Anode
KWM-50581AAA	Orange	605			50.0	
KWM-50581AGA	Yellow Green	572			36.0	
KWM-50581AGA-G5	Pure Green	525			90.0	
KWM-50581ABA	Blue	470			64.0	
KWM-50581AWA	White	x=0.30, y=0.31			270.0	

Part Number	Emitting Color	λd (nm) / x, y	Face Color	Luminous Intensity Iv (mcd)		Circuit Common
				IF=mA	Typ.	

2.4" 8×8 Single Color Dot Matrix

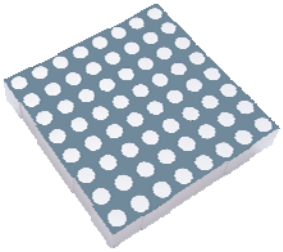

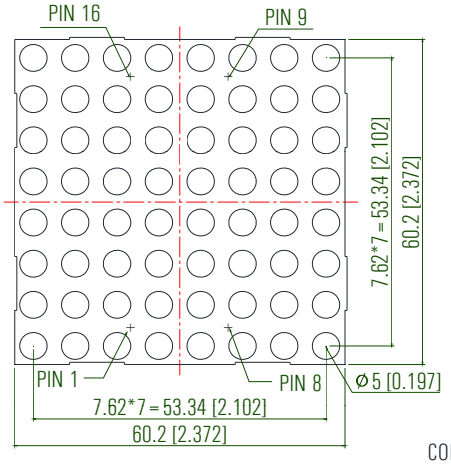

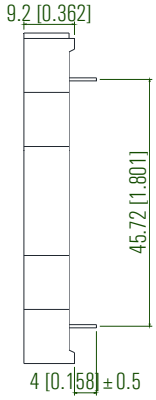

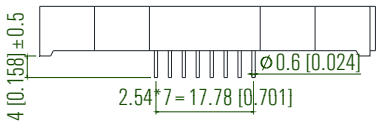

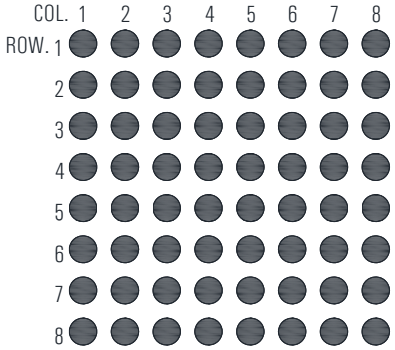

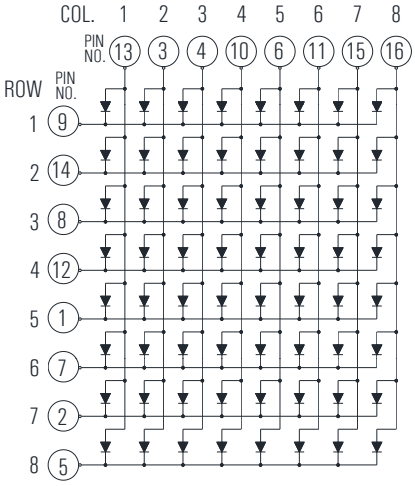

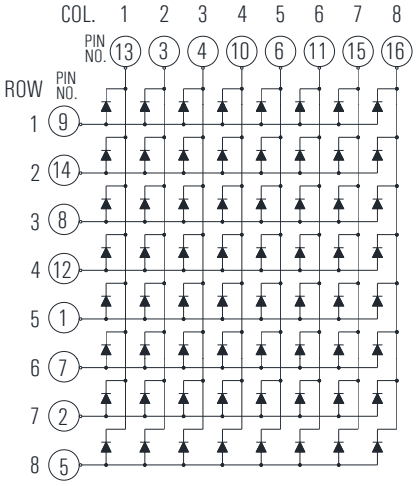

KWM-50881CRA	Deep Red	630	Gray	20	60.0	Common Row Cathode
KWM-50881CAA	Orange	605			50.0	
KWM-50881CGA	Yellow Green	572			36.0	
KWM-50881CGA-G5	Pure Green	525			90.0	
KWM-50881CBA	Blue	470			64.0	
KWM-50881CWA	White	x=0.30, y=0.31			270.0	
KWM-50881ARA	Deep Red	630			60.0	Common Row Anode
KWM-50881AAA	Orange	605			50.0	
KWM-50881AGA	Yellow Green	572			36.0	
KWM-50881AGA-G5	Pure Green	525			90.0	
KWM-50881ABA	Blue	470			64.0	
KWM-50881AWA	White	x=0.30, y=0.31			270.0	

Part Number	Emitting Color	λd (nm) / x, y	Face Color	Luminous Intensity Iv (mcd)		Circuit Common
				IF=mA	Typ.	

1.8" 7×11 Single Color Dot Matrix

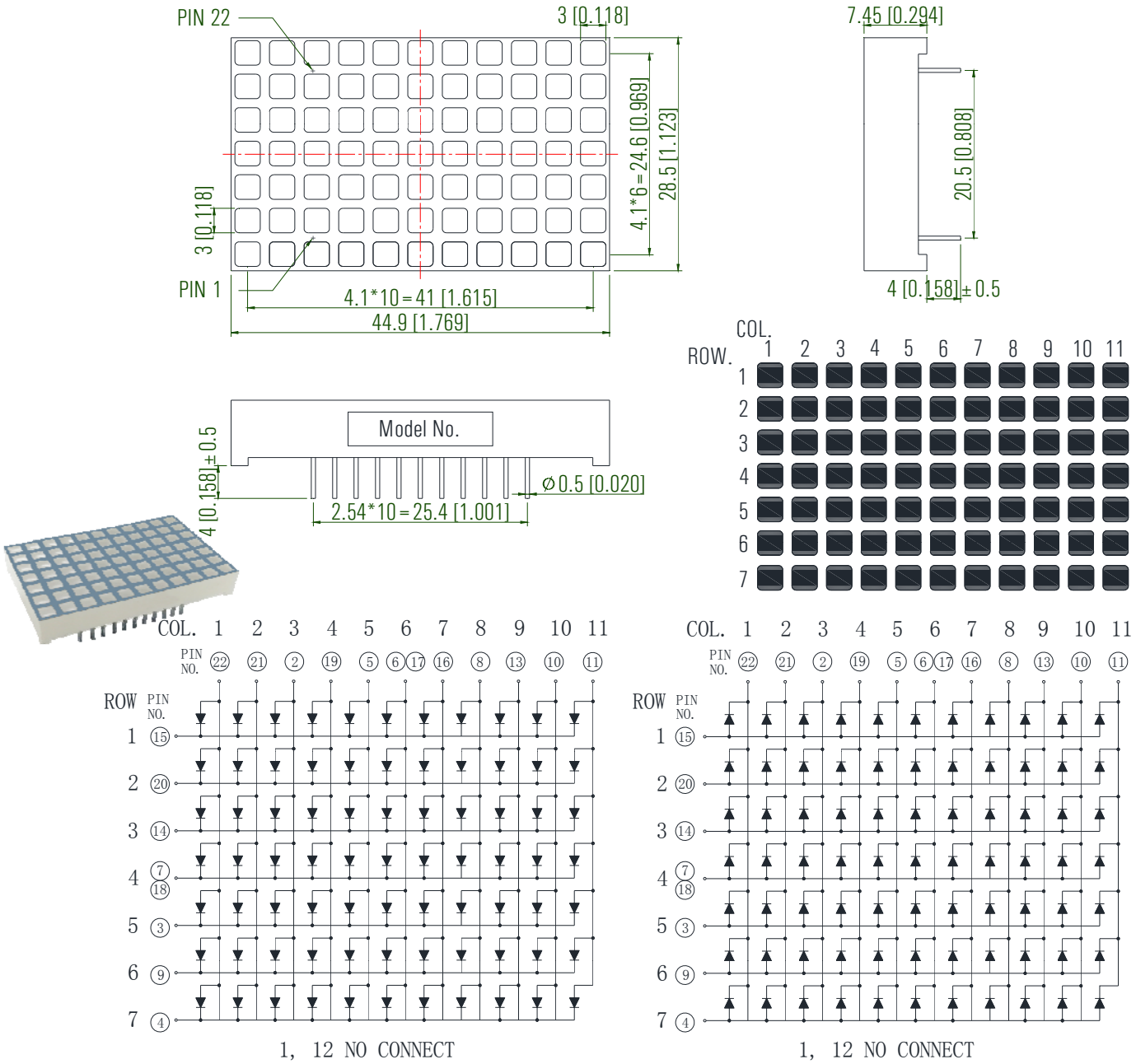

KWM-R3711CRA	Deep Red	630	Gray	20	50.0	Common Row Cathode
KWM-R3711CAA	Orange	605			46.0	
KWM-R3711CGA	Yellow Green	572			34.0	
KWM-R3711CGA-G5	Pure Green	525			80.0	
KWM-R3711CBA	Blue	470			60.0	
KWM-R3711CWA	White	x=0.30, y=0.31			260.0	
KWM-R3711ARA	Deep Red	630			50.0	Common Row Anode
KWM-R3711AAA	Orange	605			46.0	
KWM-R3711AGA	Yellow Green	572			34.0	
KWM-R3711AGA-G5	Pure Green	525			80.0	
KWM-R3711ABA	Blue	470			60.0	
KWM-R3711AWA	White	x=0.30, y=0.31			260.0	

Part Number	Emitting Color	λd (nm) / x, y	Face Color	Luminous Intensity Iv (mcd)		Circuit Common
				IF=mA	Typ.	

1.2" 8×8 Single Color Dot Matrix

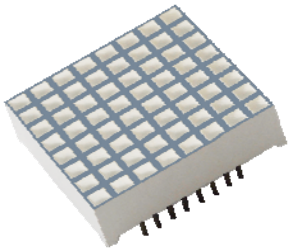

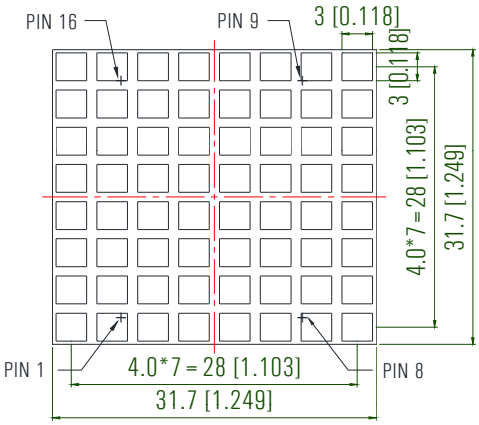

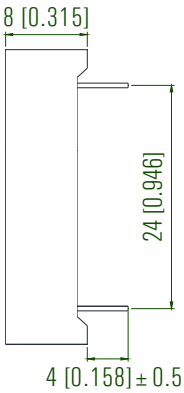

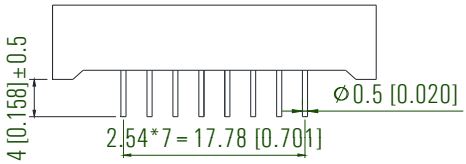

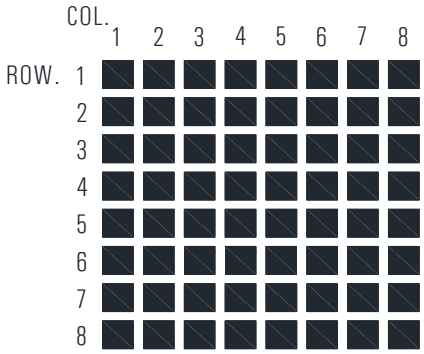

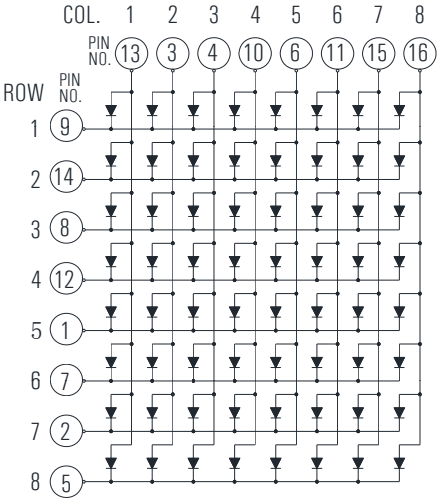

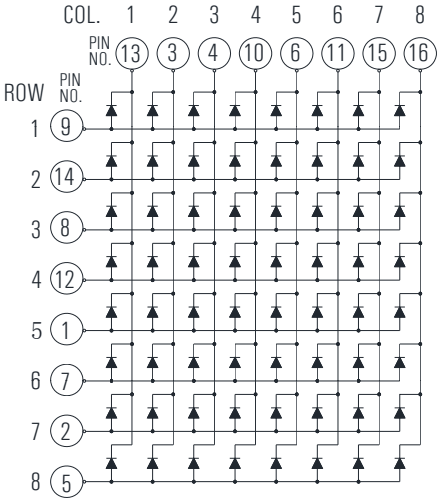

KWM-R30881CRA	Deep Red	630	Gray	20	50.0	Common Row Cathode
KWM-R30881CAA	Orange	605			50.0	
KWM-R30881CGA	Yellow Green	572			36.0	
KWM-R30881CGA-G5	Pure Green	525			80.0	
KWM-R30881CBA	Blue	470			60.0	
KWM-R30881CWA	White	x=0.30, y=0.31			270.0	
KWM-R30881ARA	Deep Red	630			50.0	Common Row Anode
KWM-R30881AAA	Orange	605			50.0	
KWM-R30881AGA	Yellow Green	572			36.0	
KWM-R30881AGA-G5	Pure Green	525			80.0	
KWM-R30881ABA	Blue	470			60.0	
KWM-R30881AWA	White	x=0.30, y=0.31			270.0	

Part Number	Emitting Color	λd (nm) / x, y	Face Color	Luminous Intensity Iv (mcd)		Circuit Common
				IF=mA	Typ.	

1.57" 16×16 Single Color Dot Matrix

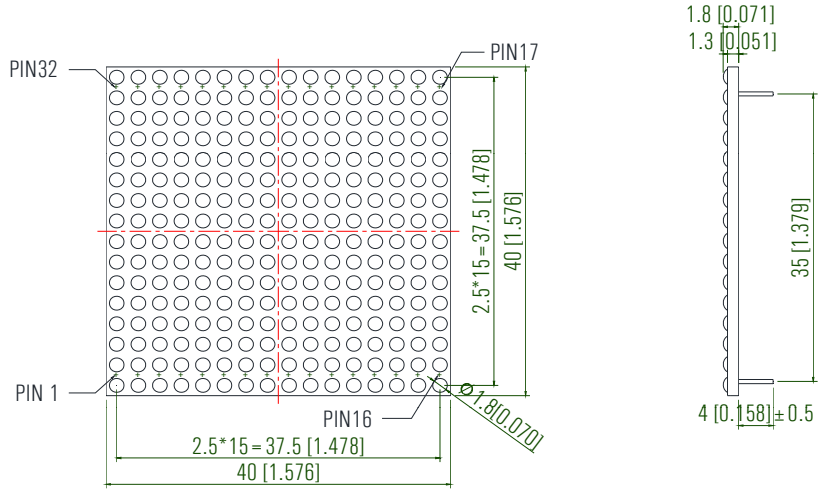

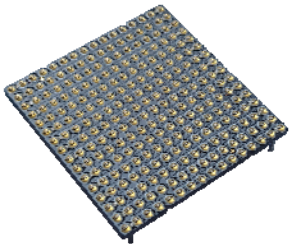

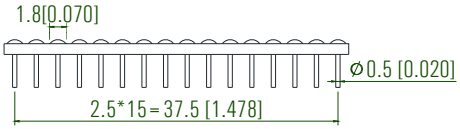

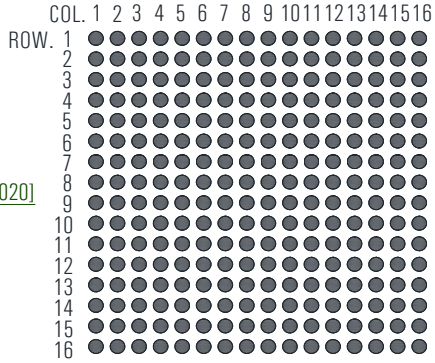

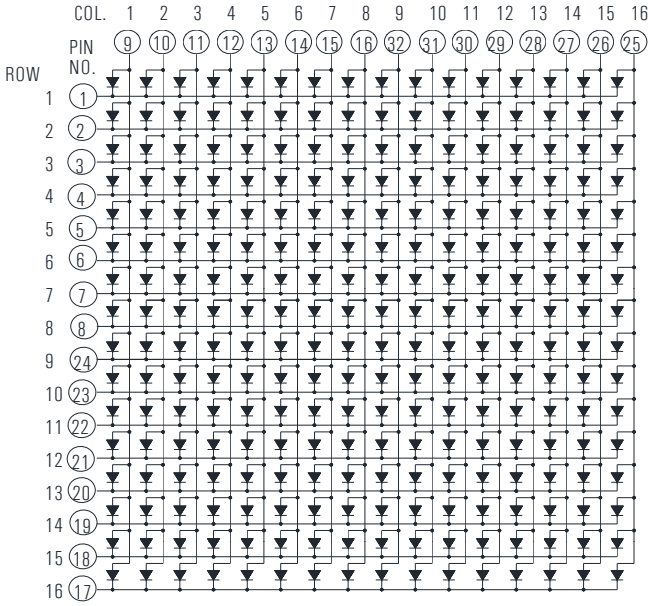

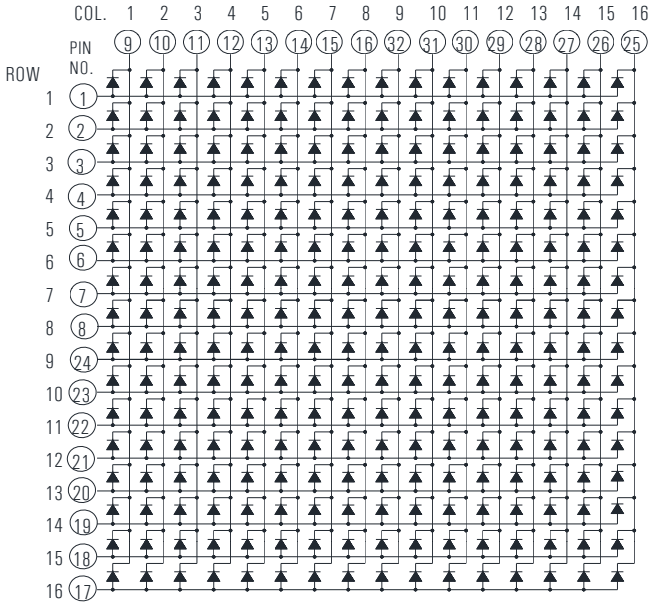

KWM-181616CR	Deep Red	630	/	20	66.0	Common Row Cathode
KWM-181616CA	Orange	605			70.0	
KWM-181616CG	Yellow Green	572			36.0	
KWM-181616AR	Deep Red	630			66.0	Common Row Anode
KWM-181616AA	Orange	605			70.0	
KWM-181616AG	Yellow Green	572			36.0	

Part Number	Emitting Color	λd (nm) / x, y	Face Color	Luminous Intensity Iv (mcd)		Circuit Common
				IF=mA	Typ.	

1.6" 16×16 Single Color Dot Matrix

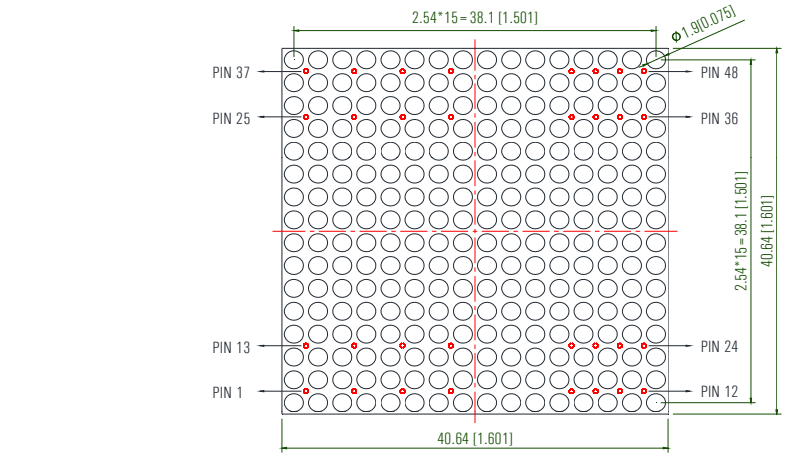

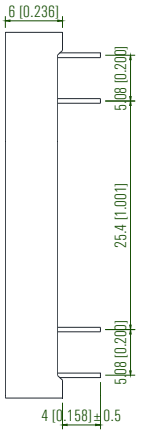

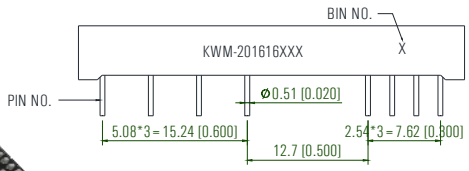

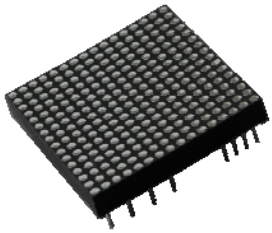

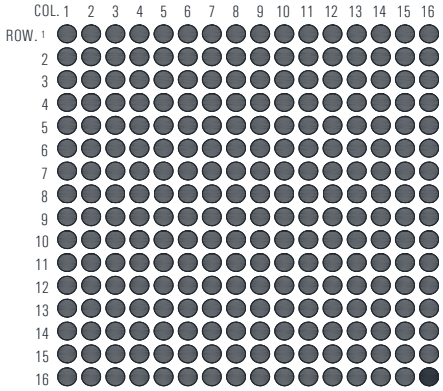

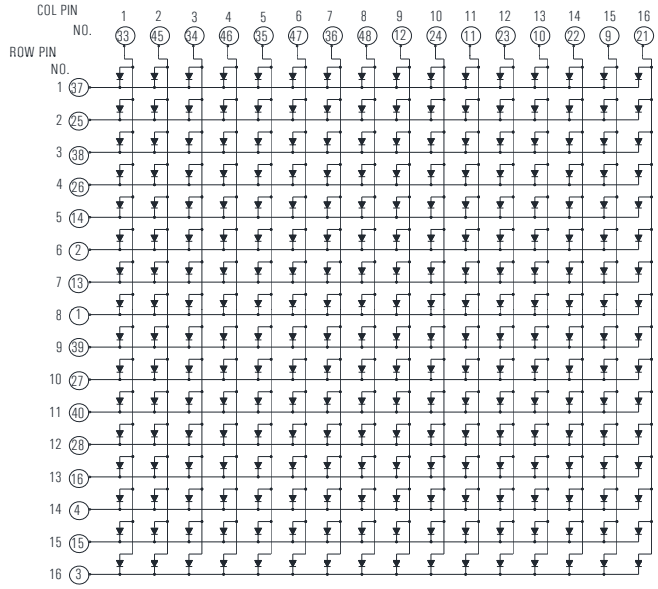

5, 6, 7, 8, 17, 18, 19, 20, 29, 30, 31, 32, 41, 42, 43, 44 NO PIN

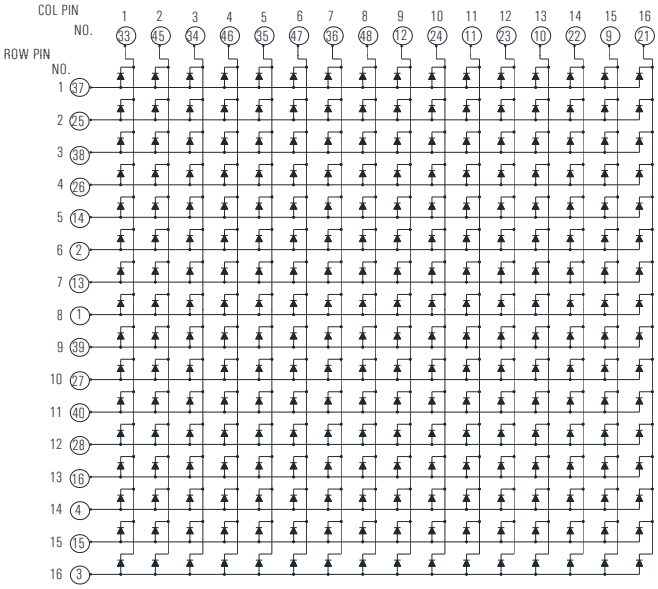

5, 6, 7, 8, 17, 18, 19, 20, 29, 30, 31, 32, 41, 42, 43, 44 NO PIN

KWM-2016161CRB	Deep Red	630	Black	20	42.0	Common Row Cathode
KWM-2016161CAB	Orange	605			40.0	
KWM-2016161CGB	Yellow Green	572			30.0	
KWM-2016161ARB	Deep Red	630			42.0	Common Row Anode
KWM-2016161AAB	Orange	605			40.0	
KWM-2016161AGB	Yellow Green	572			30.0	

Part Number	Emitting Color	λd (nm) / x, y	Face Color	Luminous Intensity Iv (mcd)		Circuit Common
				IF=mA	Typ.	

3.1" 32×16 Single Color Dot Matrix

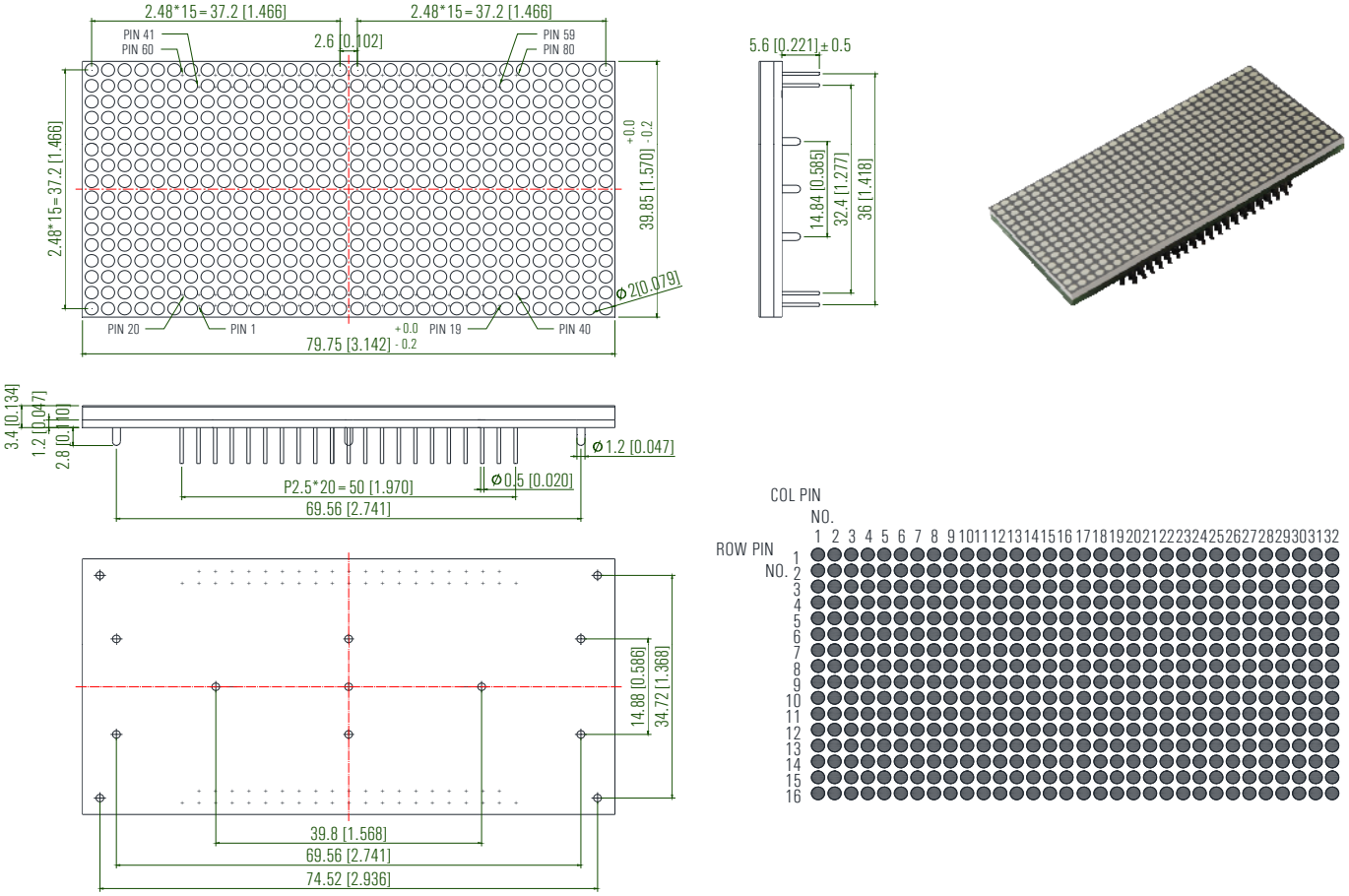

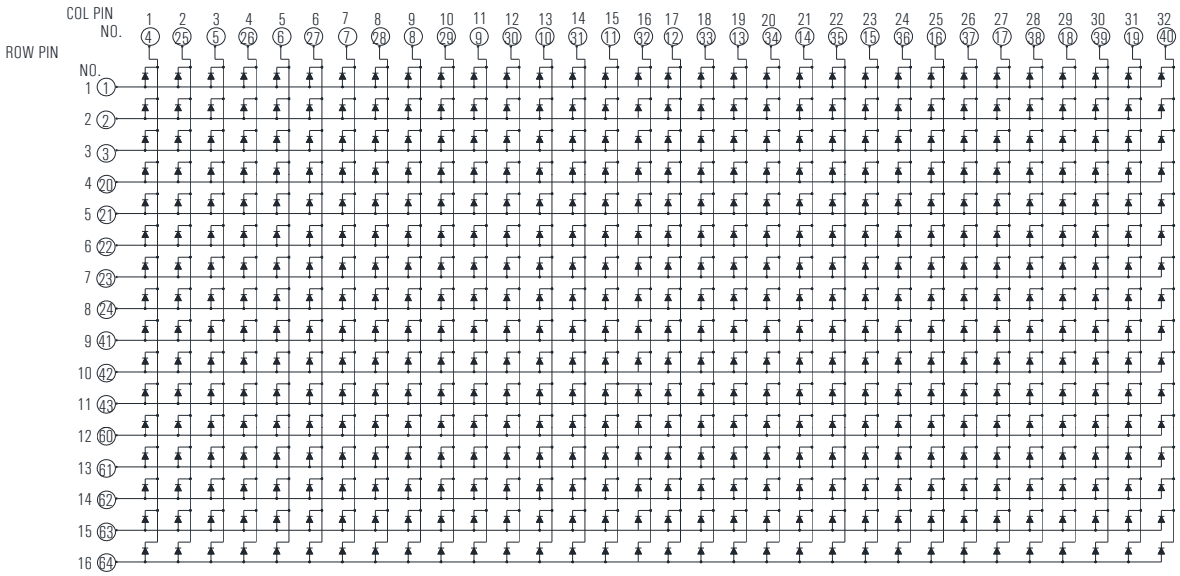

44 ~ 59, 65 ~ 80 NO CONNECT

KWM-2032161AR	Deep Red	630	Black	20	50.0	Common Row Anode
KWM-2032161AA	Orange	605			60.0	
KWM-2032161AG	Yellow Green	572			30.0	

Part Number	Emitting Color	λd (nm) / x, y	Face Color	Luminous Intensity Iv (mcd)		Circuit Common
				IF=mA	Typ.	

1.2" 8×8 Bi-Color Dot Matrix

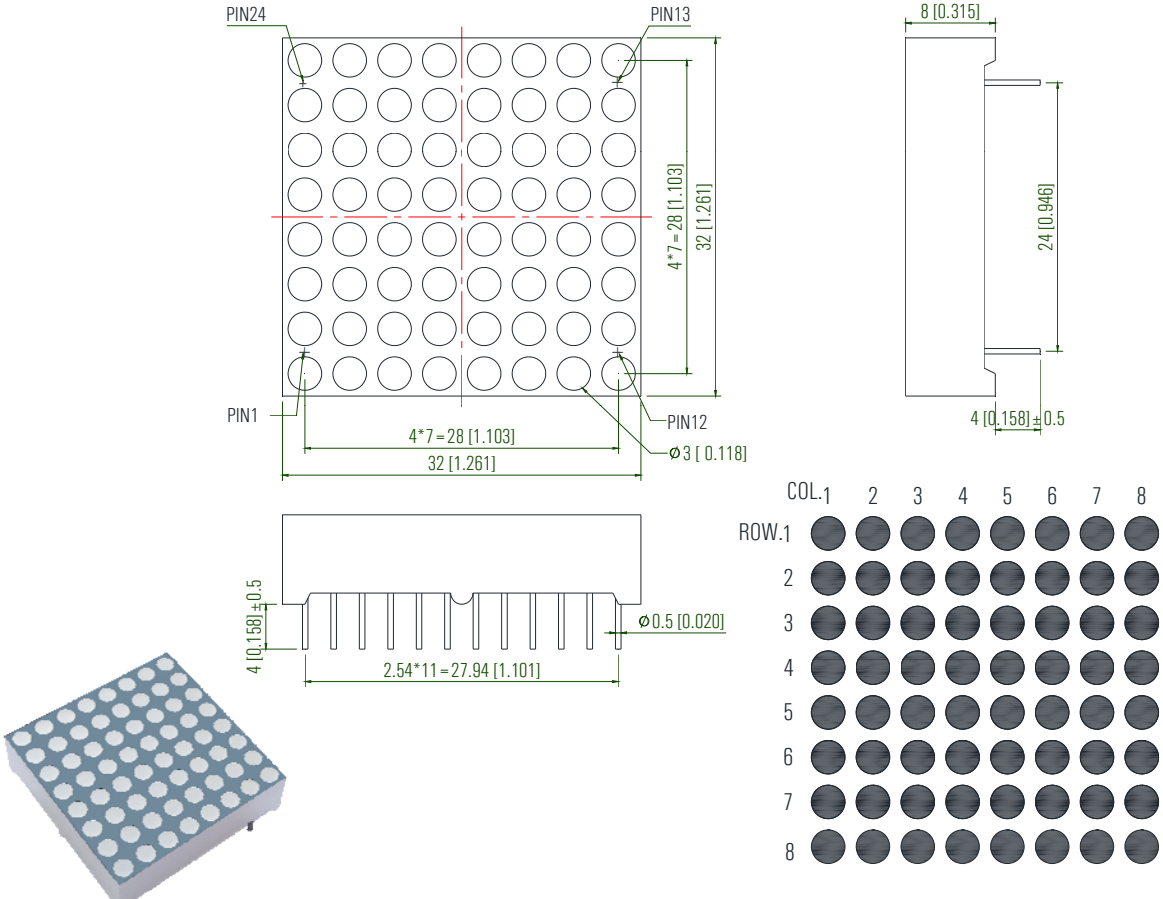

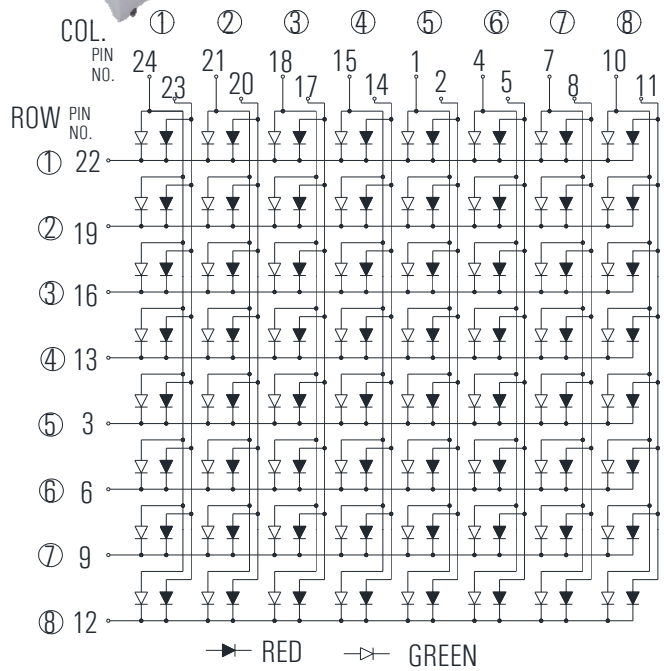

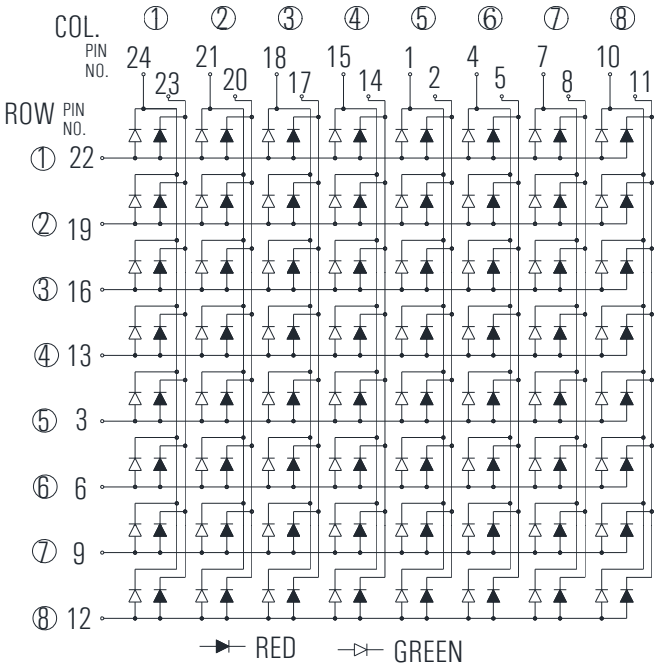

KWM-30881CRPGA	Deep Red	630	Gray	20	48.0	Common Row Cathode
	Pure Green	525			280.0	
KWM-30881ARPGA	Deep Red	630			48.0	Common Row Anode
	Pure Green	525			280.0	

Part Number	Emitting Color	λd (nm) / x, y	Face Color	Luminous Intensity Iv (mcd)		Circuit Common
				IF=mA	Typ.	

2.4" 8×8 Bi-Color Dot Matrix

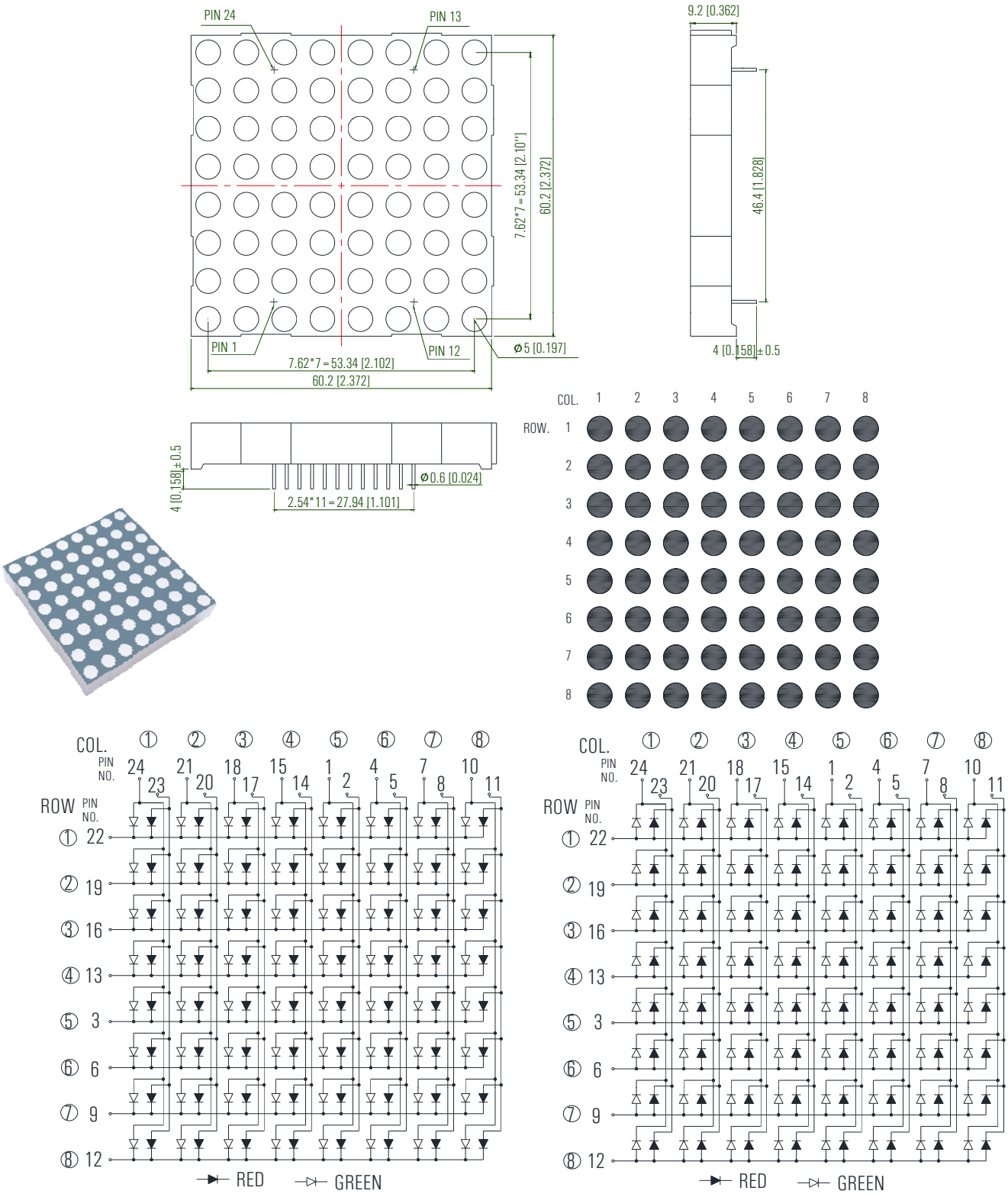

KWM-50881CRPGA	Deep Red	630	Gray	20	52.0	Common Row Cathode
	Pure Green	525			300.0	
KWM-50881ARPGA	Deep Red	630			52.0	Common Row Anode
	Pure Green	525			300.0	

Part Number	Emitting Color	λd (nm) / x, y	Face Color	Luminous Intensity Iv (mcd)		Circuit Common
				IF=mA	Typ.	

2.4" 8×8 Multi-Color Dot Matrix

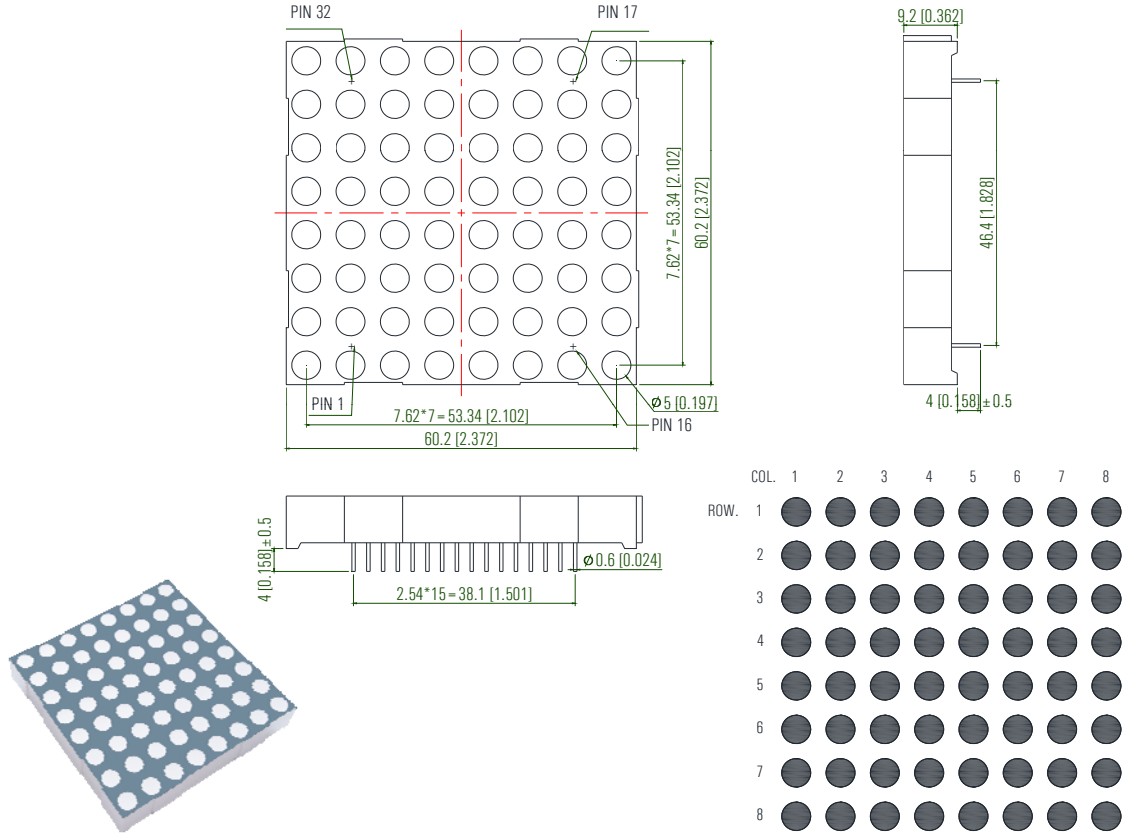

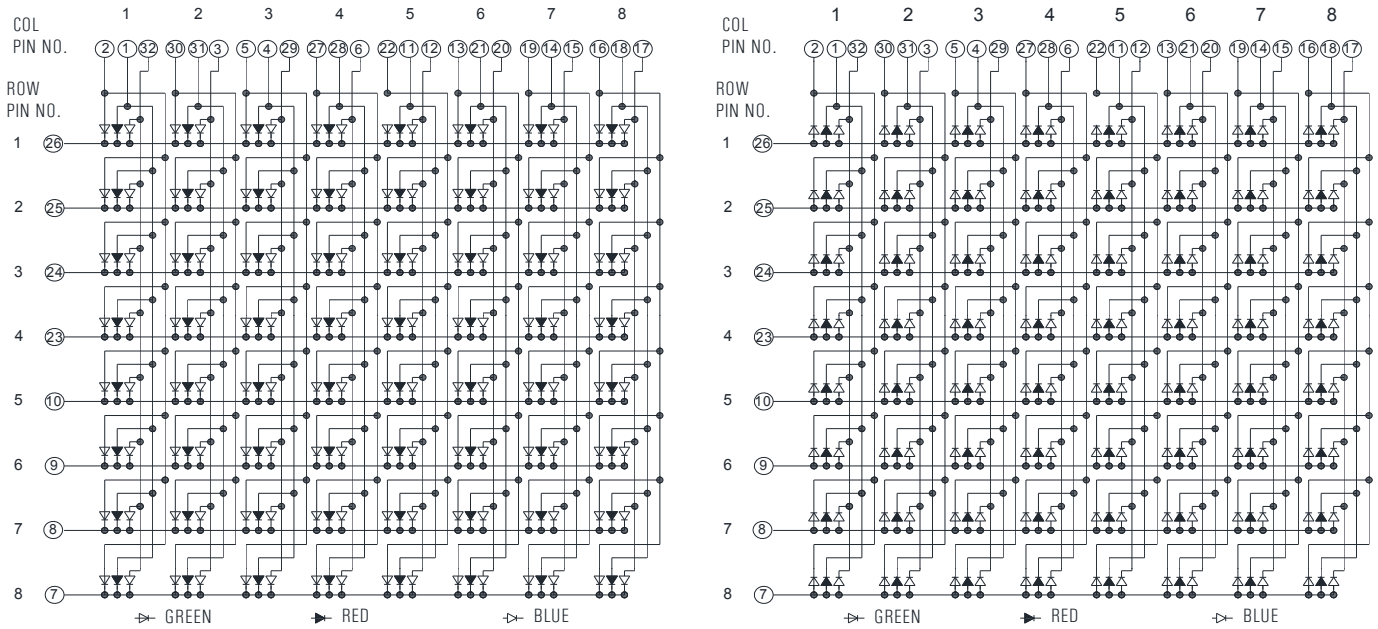

KWM-50884CRGBA	Deep Red	630	Gray	20	52.0	Common Row Cathode
	Pure Green	525			300.0	
	Blue	470			60.0	
KWM-50884ARGBA	Deep Red	630			52.0	Common Row Anode
	Pure Green	525			300.0	
	Blue	470			60.0	

Part Number	Emitting Color	λd (nm) / x, y	Face Color	Luminous Intensity Iv (mcd)		Circuit Common
				IF=mA	Typ.	

9.90mm (0.39inch) Single Digit Alphanumeric LED Display

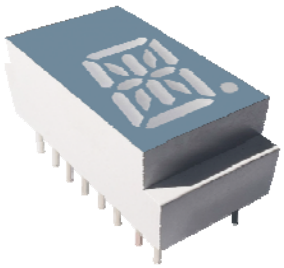

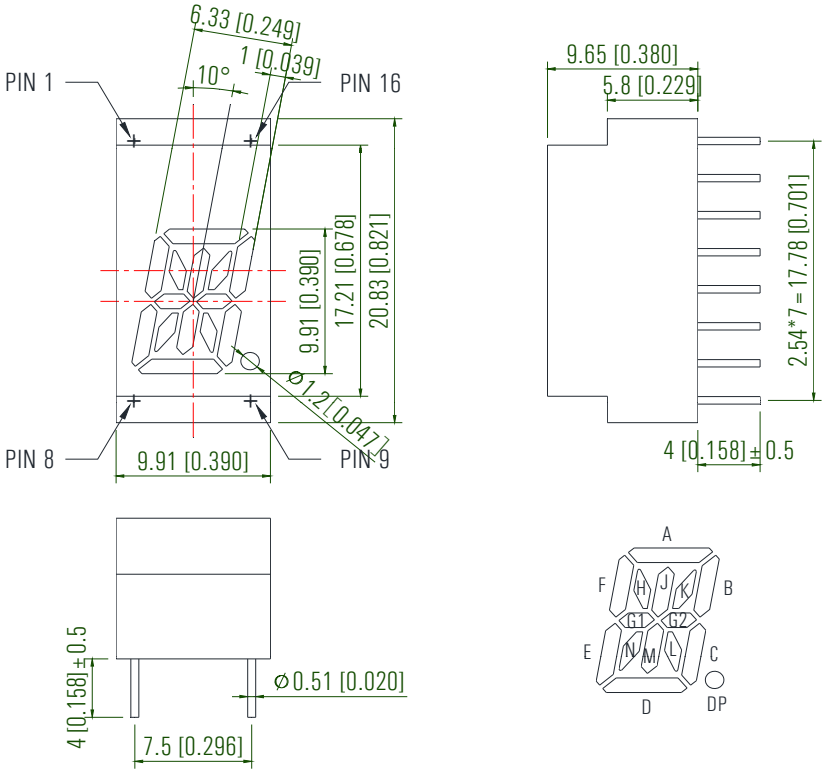

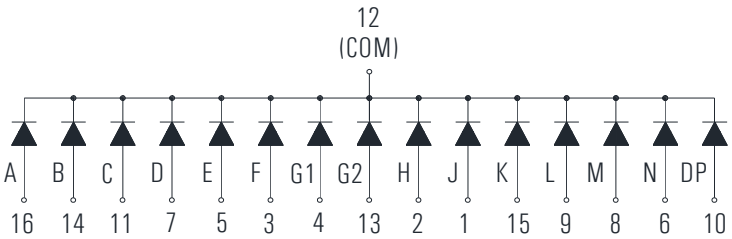

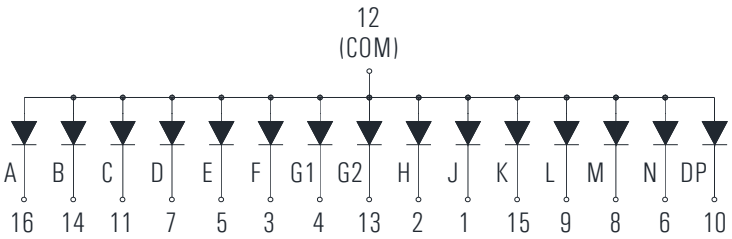

KWA-393CRA	Deep Red	630	Gray	20	30.0	Common Cathode
KWA-393CAA	Orange	605			30.0	
KWA-393CGA	Yellow Green	572			25.0	
KWA-393CGA-G5	Pure Green	525			100.0	
KWA-393CBA	Blue	470			34.0	
KWA-393CWA-Y	White	x=0.30, y=0.31			120.0	
KWA-393ARA	Deep Red	630			30.0	Common Anode
KWA-393AAA	Orange	605			30.0	
KWA-393AGA	Yellow Green	572			25.0	
KWA-393AGA-G5	Pure Green	525			100.0	
KWA-393ABA	Blue	470			34.0	
KWA-393AWA-Y	White	x=0.30, y=0.31			120.0	

Part Number	Emitting Color	λd (nm) / x, y	Face Color	Luminous Intensity Iv (mcd)		Circuit Common
				IF=mA	Typ.	

12.70mm (0.50inch) Single Digit Alphanumeric LED Display

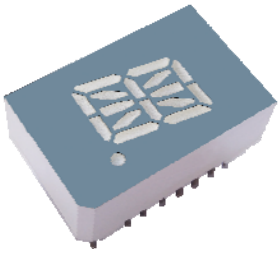

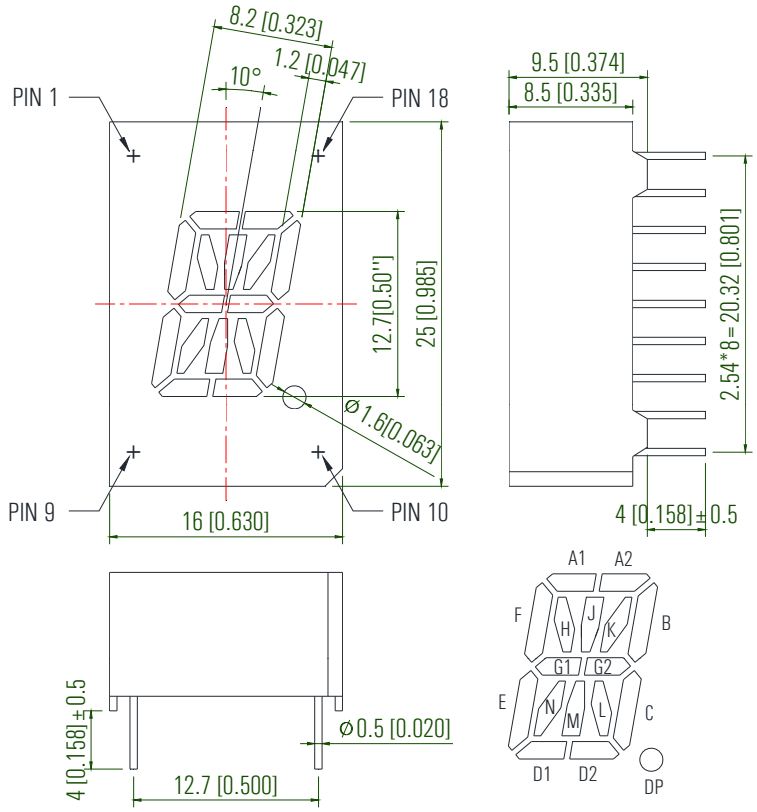

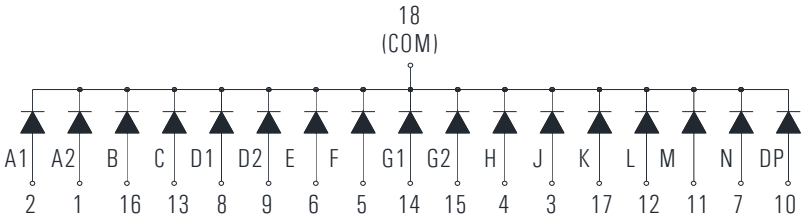

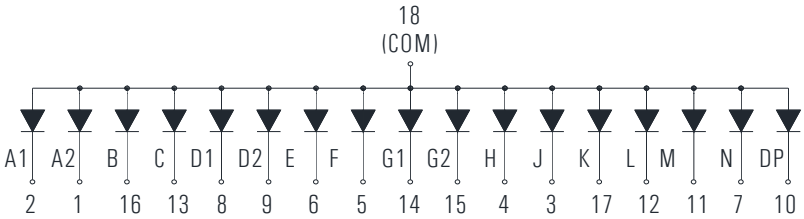

KWA-501CRA	Deep Red	630	Gray	20	31.0	Common Cathode
KWA-501CAA	Orange	605			30.0	
KWA-501CGA	Yellow Green	572			25.0	
KWA-501CGA-G5	Pure Green	525			100.0	
KWA-501CBA	Blue	470			34.0	
KWA-501CWA	White	x=0.30, y=0.31			120.0	
KWA-501ARA	Deep Red	630			31.0	Common Anode
KWA-501AAA	Orange	605			30.0	
KWA-501AGA	Yellow Green	572			25.0	
KWA-501AGA-G5	Pure Green	525			100.0	
KWA-501ABA	Blue	470			34.0	
KWA-501AWA	White	x=0.30, y=0.31			120.0	

Part Number	Emitting Color	λd (nm) / x, y	Face Color	Luminous Intensity Iv (mcd)		Circuit Common
				IF=mA	Typ.	

20.32mm (0.80inch) Single Digit Alphanumeric LED Display

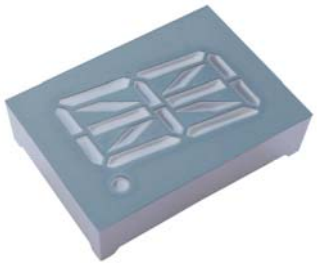

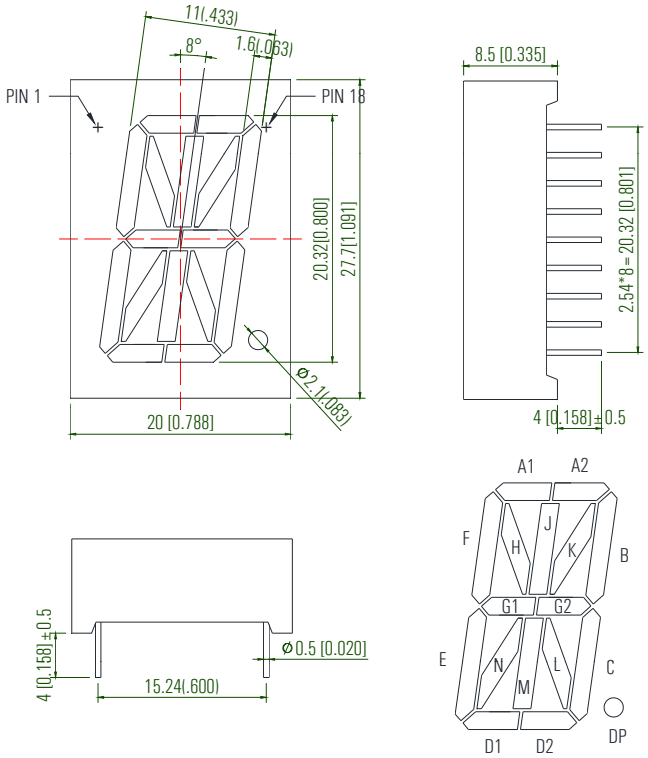

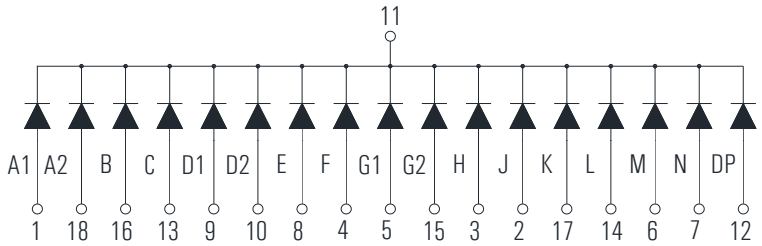

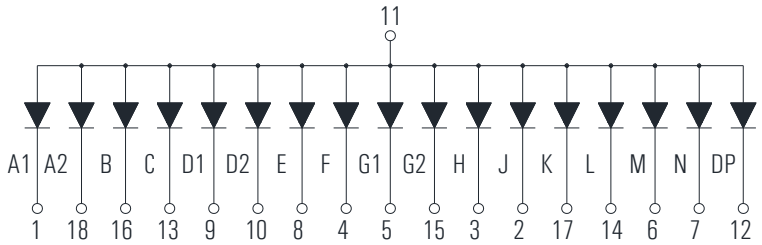

KWA-801CRA	Deep Red	630	Gray	20	38.0	Common Cathode
KWA-801CAA	Orange	605			36.0	
KWA-801CGA	Yellow Green	572			20.0	
KWA-801CGA-G5	Pure Green	525			104.0	
KWA-801CBA	Blue	470			40.0	
KWA-801CWA	White	x=0.30, y=0.31			260.0	
KWA-801ARA	Deep Red	630			38.0	Common Anode
KWA-801AAA	Orange	605			36.0	
KWA-801AGA	Yellow Green	572			20.0	
KWA-801AGA-G5	Pure Green	525			104.0	
KWA-801ABA	Blue	470			40.0	
KWA-801AWA	White	x=0.30, y=0.31			260.0	

Part Number	Emitting Color	λd (nm) / x, y	Face Color	Luminous Intensity Iv (mcd)		Circuit Common
				IF=mA	Typ.	

10.00mm (0.39inch) Dual Digit Alphanumeric LED Display

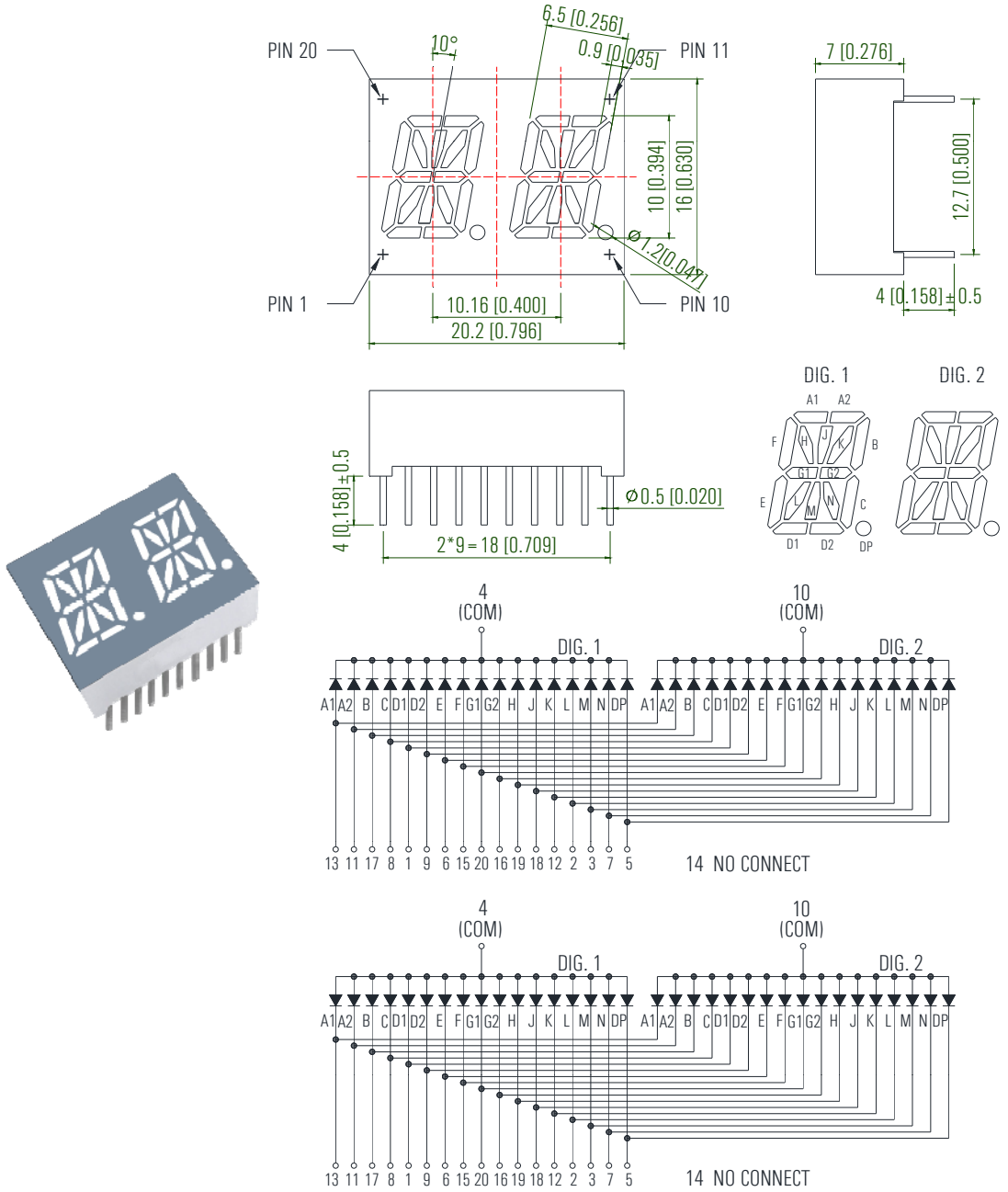

KWA2-391CRA	Deep Red	630	Gray	20	30.0	Common Cathode
KWA2-391CAA	Orange	605			30.0	
KWA2-391CGA	Yellow Green	572			25.0	
KWA2-391CGA-G5	Pure Green	525			100.0	
KWA2-391CBA	Blue	470			34.0	
KWA2-391CWA-Y	White	x=0.30, y=0.31			120.0	
KWA2-391ARA	Deep Red	630			30.0	Common Anode
KWA2-391AAA	Orange	605			30.0	
KWA2-391AGA	Yellow Green	572			25.0	
KWA2-391AGA-G5	Pure Green	525			100.0	
KWA2-391ABA	Blue	470			34.0	
KWA2-391AWA-Y	White	x=0.30, y=0.31			120.0	

Part Number	Emitting Color	λd (nm) / x, y	Face Color	Luminous Intensity Iv (mcd)		Circuit Common
				IF=mA	Typ.	

13.60mm (0.54inch) Dual Digit Alphanumeric LED Display

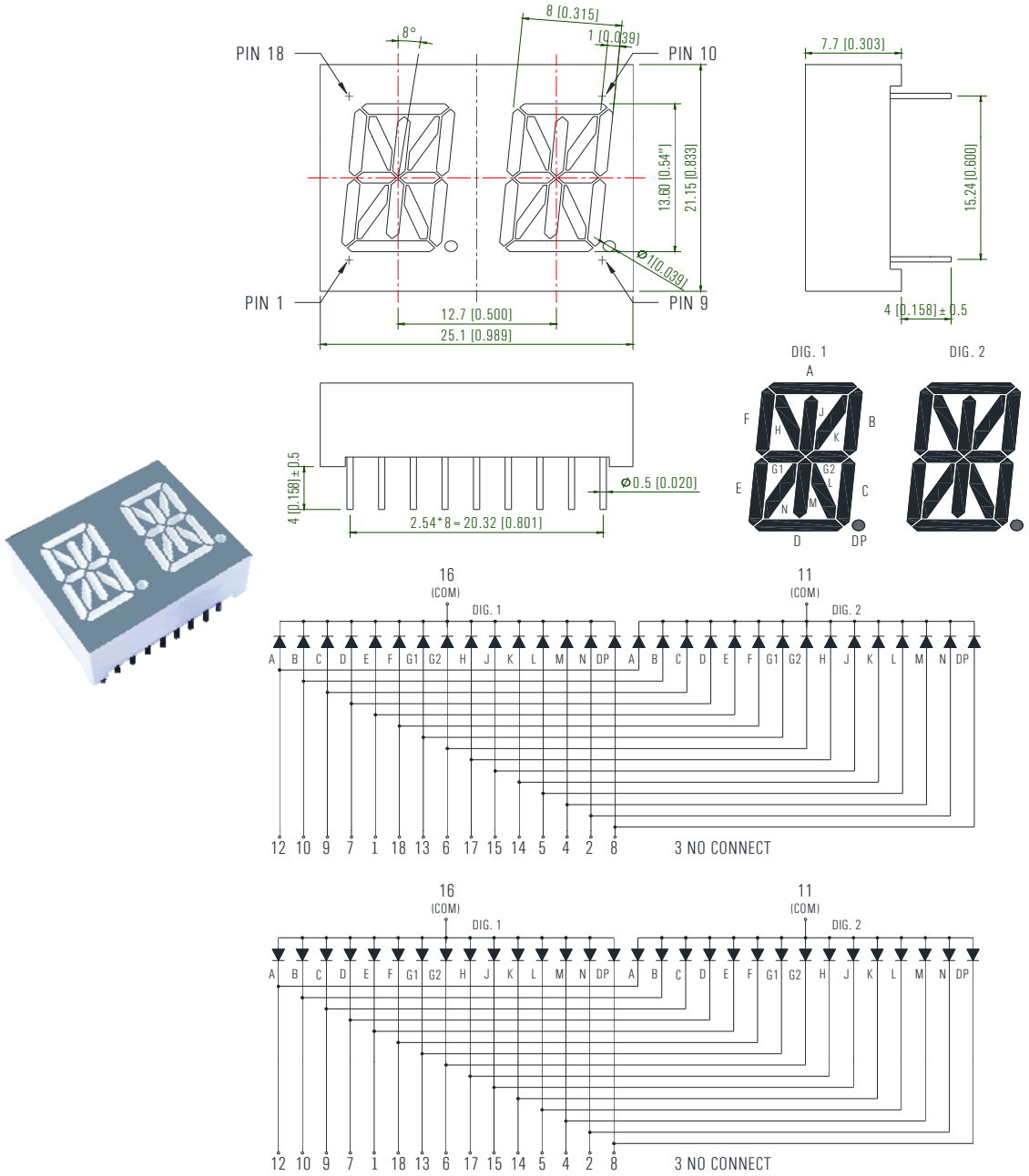

KWA-541CRA	Deep Red	630	Gray	20	31.0	Common Cathode
KWA-541CAA	Orange	605			32.0	
KWA-541CGA	Yellow Green	572			25.0	
KWA-541CGA-G5	Pure Green	525			100.0	
KWA-541CBA	Blue	470			34.0	
KWA-541CWA	White	x=0.30, y=0.31			160.0	
KWA-541ARA	Deep Red	630			31.0	Common Anode
KWA-541AAA	Orange	605			32.0	
KWA-541AGA	Yellow Green	572			25.0	
KWA-541AGA-G5	Pure Green	525			100.0	
KWA-541ABA	Blue	470			34.0	
KWA-541AWA	White	x=0.30, y=0.31			160.0	

Part Number	Emitting Color	λd (nm) / x, y	Face Color	Luminous Intensity Iv (mcd)		Circuit Common
				IF=mA	Typ.	

10.00mm (0.39inch) Triple Digit Alphanumeric LED Display

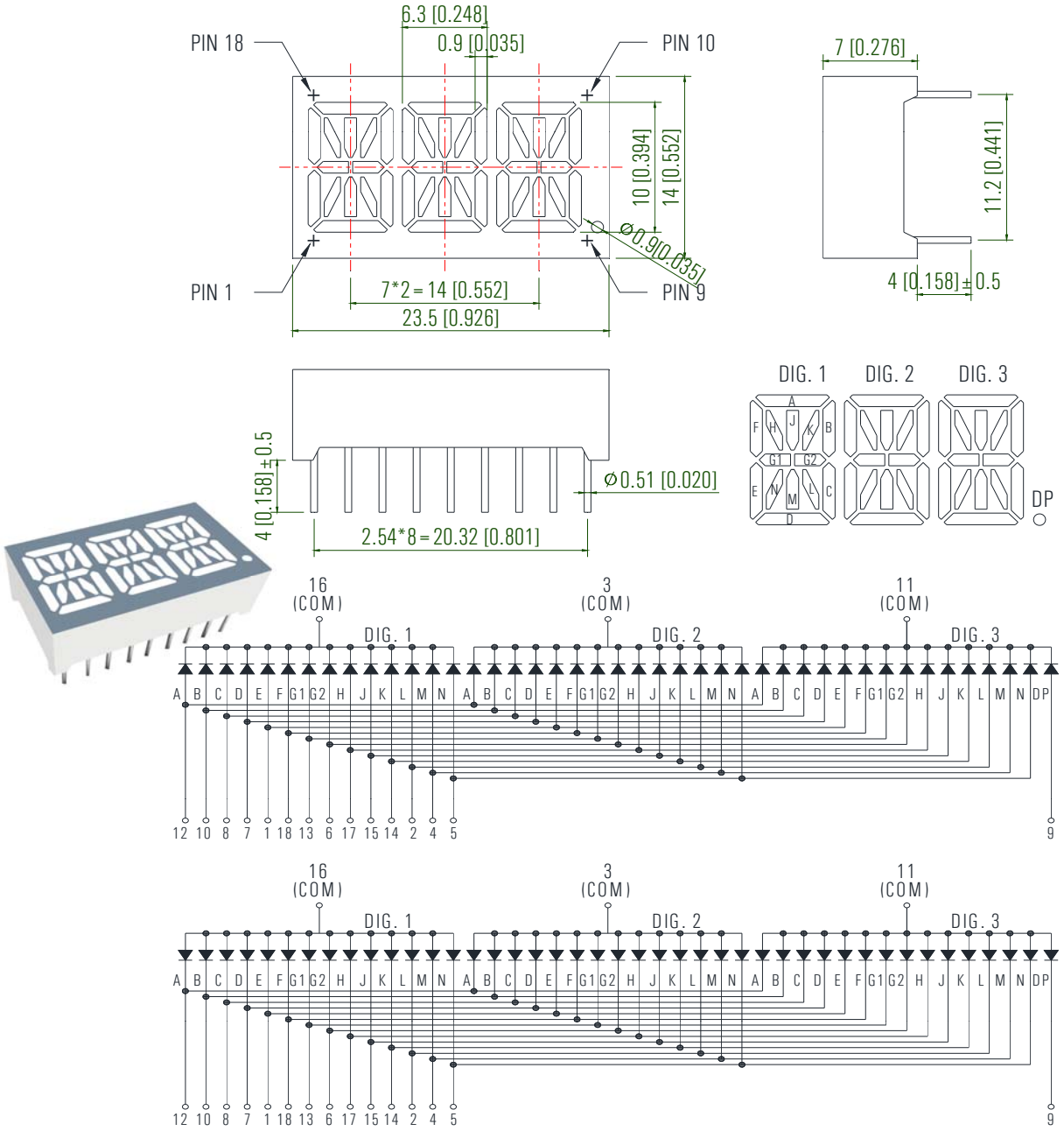

KWA3-391CRA	Deep Red	630	Gray	20	30.0	Common Cathode
KWA3-391CAA	Orange	605			30.0	
KWA3-391CGA	Yellow Green	572			25.0	
KWA3-391CGA-G5	Pure Green	525			100.0	
KWA3-391CBA	Blue	470			34.0	
KWA3-391CWA-Y	White	x=0.30, y=0.31			120.0	
KWA3-391ARA	Deep Red	630			30.0	Common Anode
KWA3-391AAA	Orange	605			30.0	
KWA3-391AGA	Yellow Green	572			25.0	
KWA3-391AGA-G5	Pure Green	525			100.0	
KWA3-391ABA	Blue	470			34.0	
KWA3-391AWA-Y	White	x=0.30, y=0.31			120.0	

Part Number	Emitting Color	λd (nm) / x, y	Face Color	Luminous Intensity Iv (mcd)		Circuit Common
				IF=mA	Typ.	

13.80mm (0.54inch) Triple Digit Alphanumeric LED Display

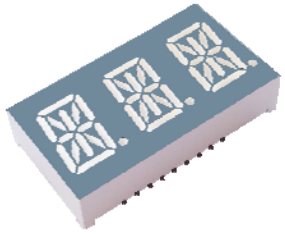

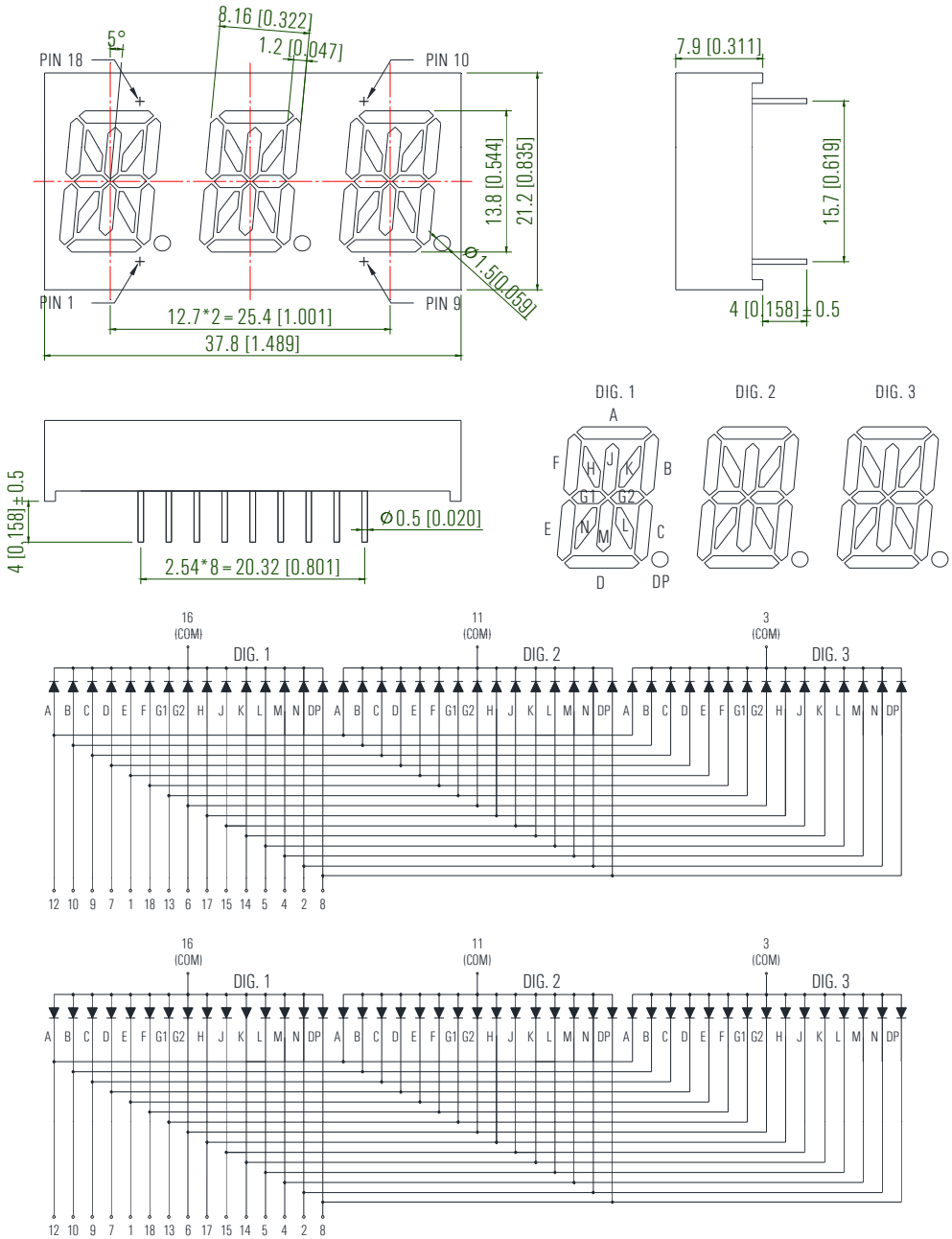

KWA3-541CRA	Deep Red	630	Gray	20	32.0	Common Cathode
KWA3-541CAA	Orange	605			34.0	
KWA3-541CGA	Yellow Green	572			26.0	
KWA3-541CGA-G5	Pure Green	525			104.0	
KWA3-541CBA	Blue	470			36.0	
KWA3-541CWA	White	x=0.30, y=0.31			160.0	
KWA3-541ARA	Deep Red	630			32.0	Common Anode
KWA3-541AAA	Orange	605			34.0	
KWA3-541AGA	Yellow Green	572			26.0	
KWA3-541AGA-G5	Pure Green	525			104.0	
KWA3-541ABA	Blue	470			36.0	
KWA3-541AWA	White	x=0.30, y=0.31			160.0	

Part Number	Emitting Color	λd (nm) / x, y	Face Color	Luminous Intensity Iv (mcd)		Circuit Common
				IF=mA	Typ.	

10.00mm (0.39inch) Quadruple Digit Alphanumeric LED Display

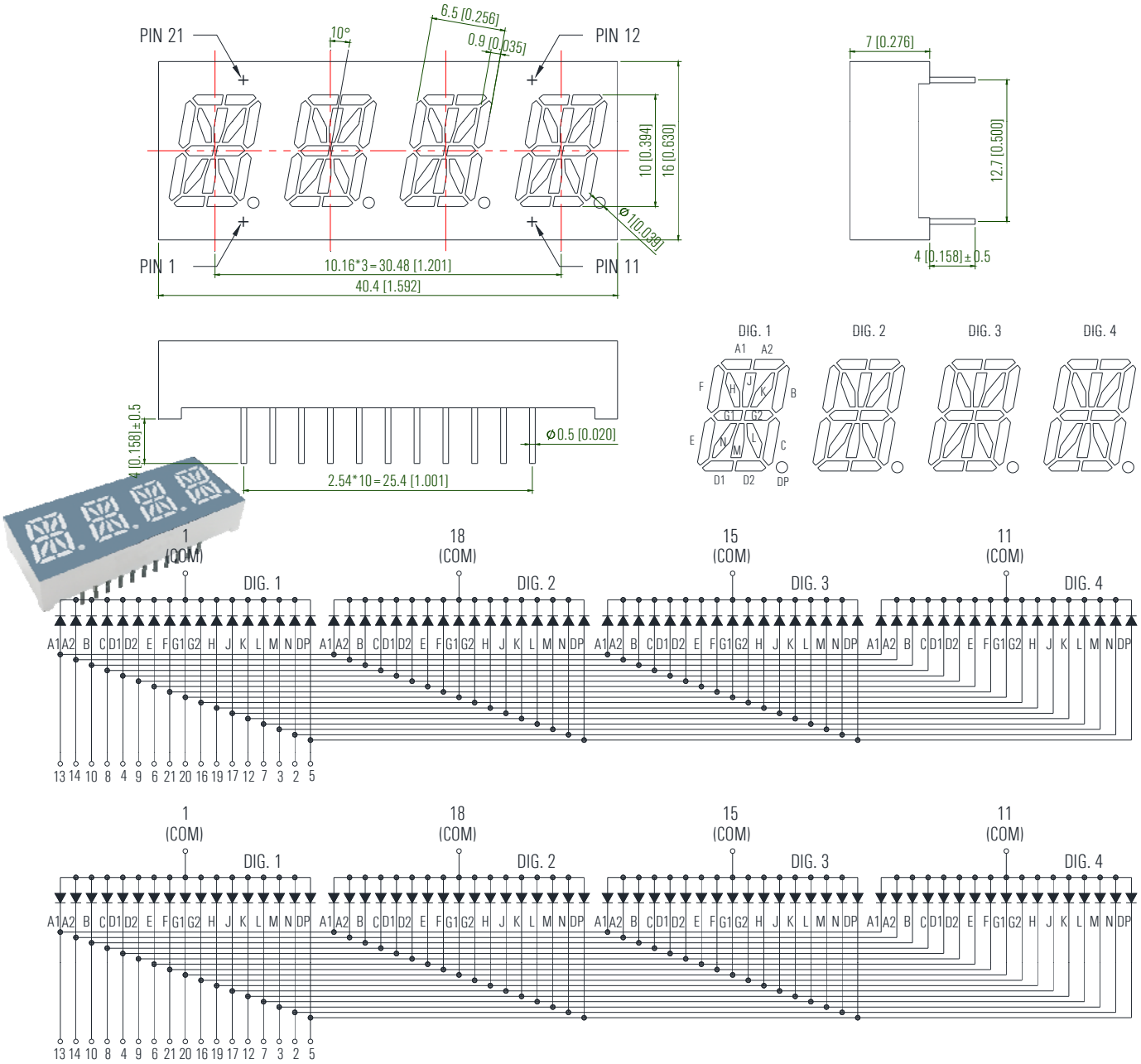

KWA4-391CRA	Deep Red	630	Gray	20	30.0	Common Cathode
KWA4-391CAA	Orange	605			30.0	
KWA4-391CGA	Yellow Green	572			25.0	
KWA4-391CGA-G5	Pure Green	525			100.0	
KWA4-391CBA	Blue	470			34.0	
KWA4-391CWA-Y	White	x=0.30, y=0.31			120.0	
KWA4-391ARA	Deep Red	630			30.0	Common Anode
KWA4-391AAA	Orange	605			30.0	
KWA4-391AGA	Yellow Green	572			25.0	
KWA4-391AGA-G5	Pure Green	525			100.0	
KWA4-391ABA	Blue	470			34.0	
KWA4-391AWA-Y	White	x=0.30, y=0.31			120.0	

Part Number	Emitting Color	λd (nm) / x, y	Face Color	Luminous Intensity Iv (mcd)		Circuit Common
				IF=mA	Typ.	

13.80mm (0.54inch) Quadruple Digit Alphanumeric LED Display

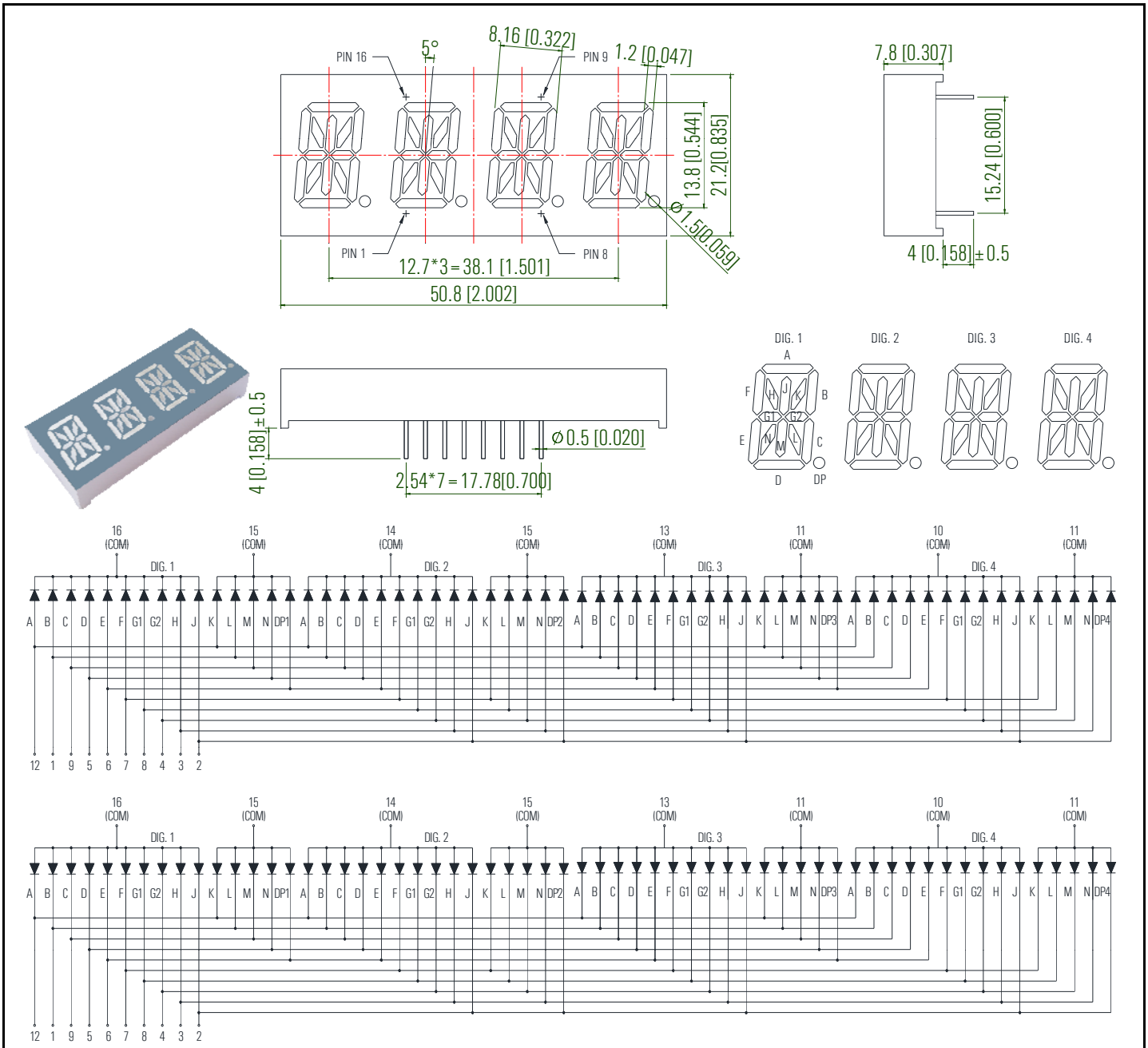

KWA4-542CRA	Deep Red	630	Gray	20	32.0	Common Cathode
KWA4-542CAA	Orange	605			34.0	
KWA4-542CGA	Yellow Green	572			26.0	
KWA4-542CGA-G5	Pure Green	525			104.0	
KWA4-542CBA	Blue	470			36.0	
KWA4-542CWA	White	x=0.30, y=0.31			160.0	
KWA4-542ARA	Deep Red	630			32.0	Common Anode
KWA4-542AAA	Orange	605			34.0	
KWA4-542AGA	Yellow Green	572			26.0	
KWA4-542AGA-G5	Pure Green	525			104.0	
KWA4-542ABA	Blue	470			36.0	
KWA4-542AWA	White	x=0.30, y=0.31			160.0	

Part Number	Emitting Color	λd (nm) / x, y	Face Color	Luminous Intensity Iv (mcd)		Circuit Common
				IF=mA	Typ.	

Φ19.5mm Round With Flange Type

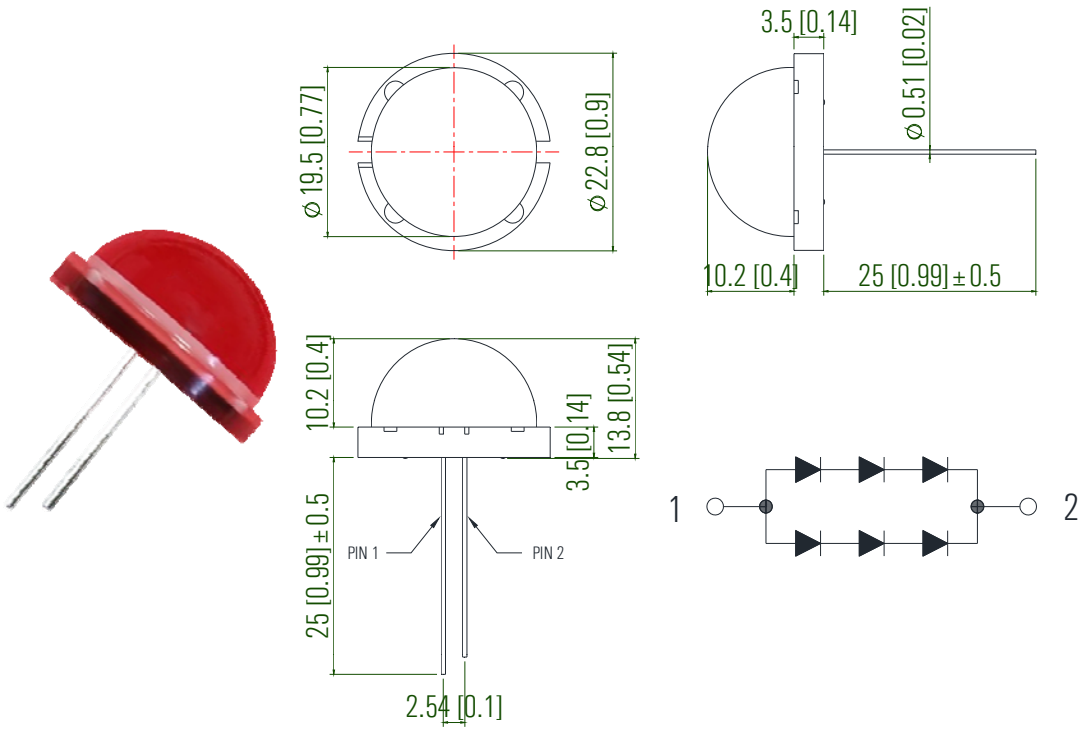

200RD-AP25	Deep Red	630	Red	20	50.0	---
200AD-AP25	Orange	605	Orange		50.0	---
200GD-AP25	Yellow Green	572	Green		25.0	---
200GD-G5-AP25	Pure Green	525	Green		120.0	---
200BD-AP25	Blue	470	Blue		30.0	---
200WD-AP25	White	x=0.30, y=0.31	White		130.0	---

1. All dimensions are in millimeters (inches).
2. Tolerance is ±0.25mm (.010") unless otherwise noted.
3. Specifications are subject to change without notice.

Part Number	Emitting Color	λd (nm) / x, y	Face Color	Luminous Intensity Iv (mcd)		Circuit Common
				IF=mA	Typ.	

5 Segment Light Bar LED Display

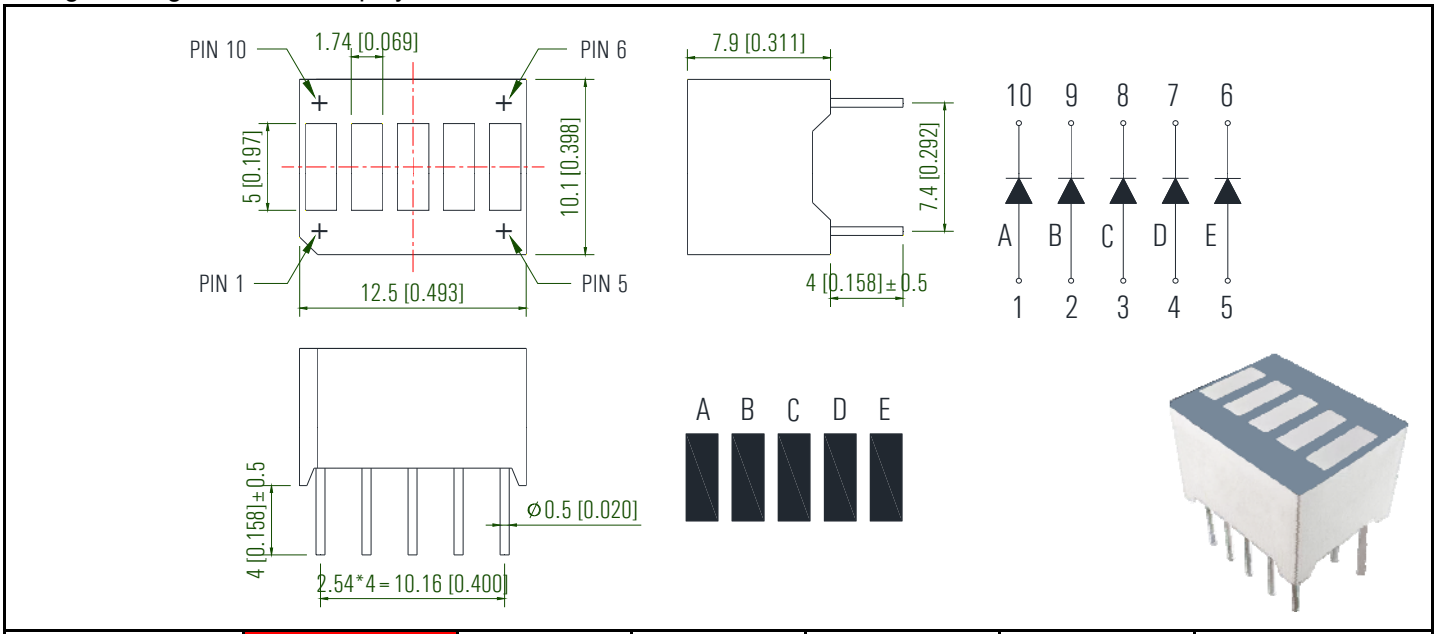

KWL-R1210RA	Deep Red	630	Gray	20	28.0	---
KWL-R1210AA	Orange	605			28.0	---
KWL-R1210GA	Yellow Green	572			20.0	---
KWL-R1210GA-G5	Pure Green	525			80.0	---
KWL-R1210BA	Blue	470			70.0	---
KWL-R1210WA	White	x=0.30, y=0.31			130.0	---

10 Segment Light Bar LED Display

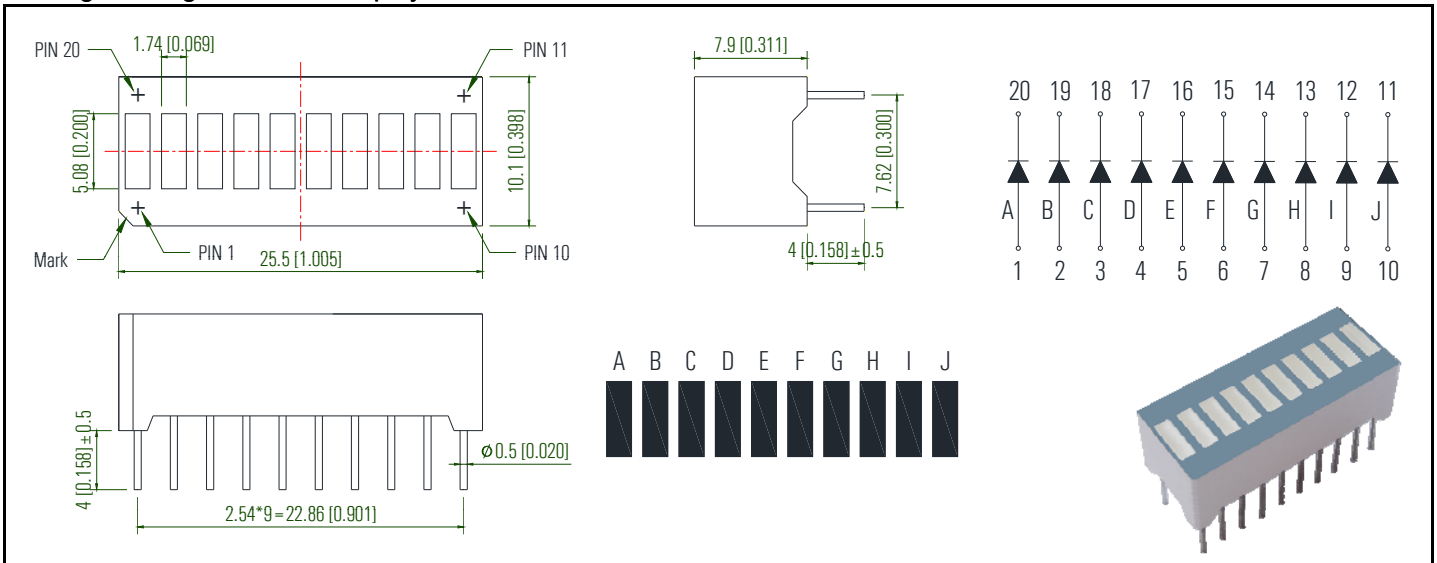

KWL-R1025RA	Deep Red	630	Gray	20	28.0	---
KWL-R1025AA	Orange	605			28.0	---
KWL-R1025GA	Yellow Green	572			20.0	---
KWL-R1025GA-G5	Pure Green	525			80.0	---
KWL-R1025BA	Blue	470			70.0	---
KWL-R1025WA	White	x=0.30, y=0.31			130.0	---

Part Number	Emitting Color	λd (nm) / x, y	Face Color	Luminous Intensity Iv (mcd)		Circuit Common
				IF=mA	Typ.	

12.5×6.3mm Light Bar LED Display

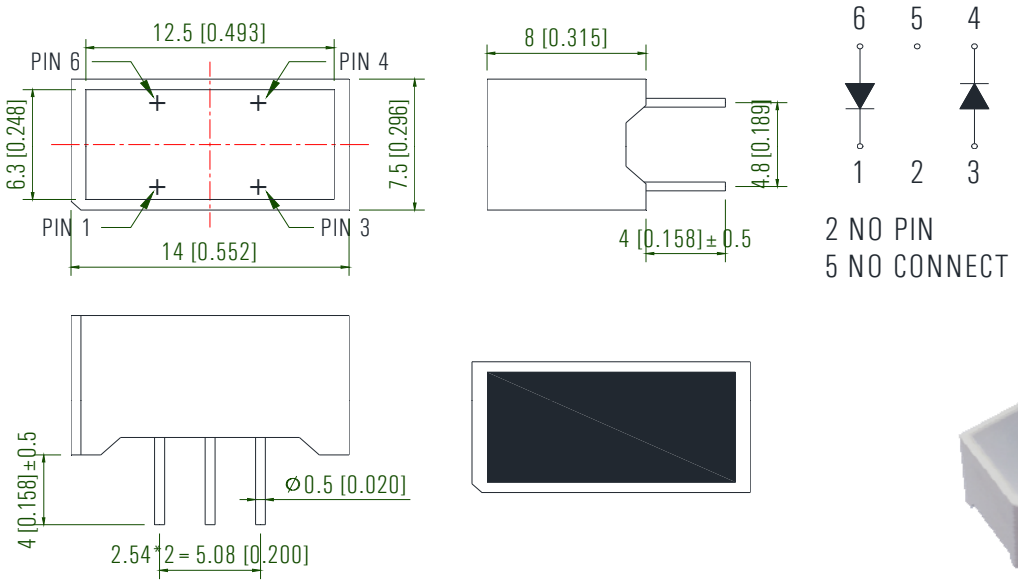

KWL-R7141RW	Deep Red	630	White	20	30.0	---
KWL-R7141AW	Orange	605			30.0	---
KWL-R7141GW	Yellow Green	572			22.0	---
KWL-R7141GW-G5	Pure Green	525			60.0	---
KWL-R7141BW	Blue	470			36.0	---
KWL-R7141WW	White	x=0.30, y=0.31			130.0	---

18mm Round Light Bar LED Display

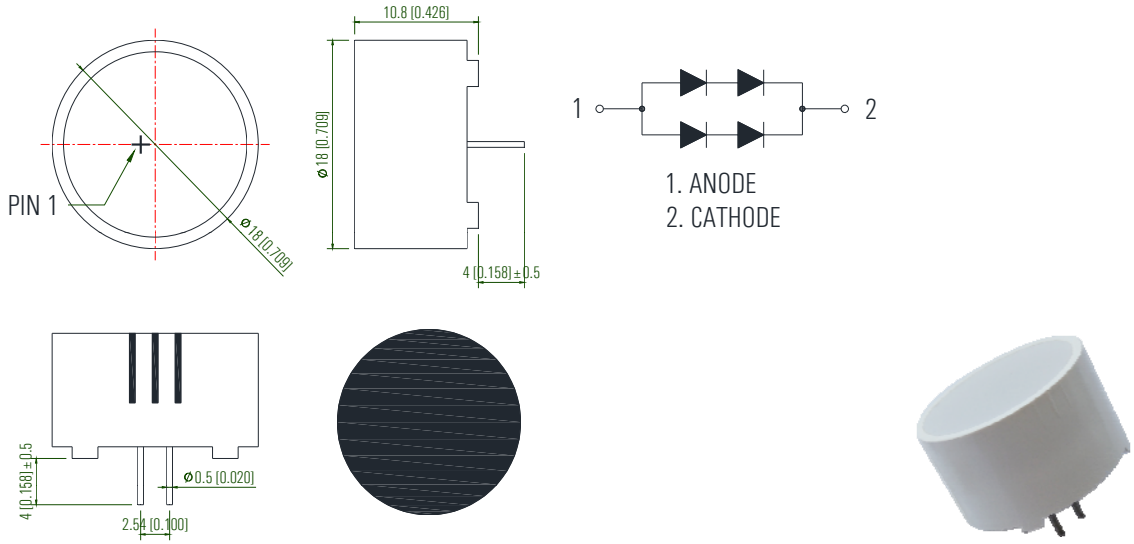

KWL-C181RW	Deep Red	630	White	20	32.0	---
KWL-C181AW	Orange	605			32.0	---
KWL-C181GW	Yellow Green	572			24.0	---
KWL-C181GW-G5	Pure Green	525			80.0	---
KWL-C181BW	Blue	470			38.0	---
KWL-C181WW	White	x=0.30, y=0.31			160.0	---

Part Number	Emitting Color	λd (nm) / x, y	Face Color	Luminous Intensity Iv (mcd)		Circuit Common
				IF=mA	Typ.	

25mm×18mm Light Bar LED Display

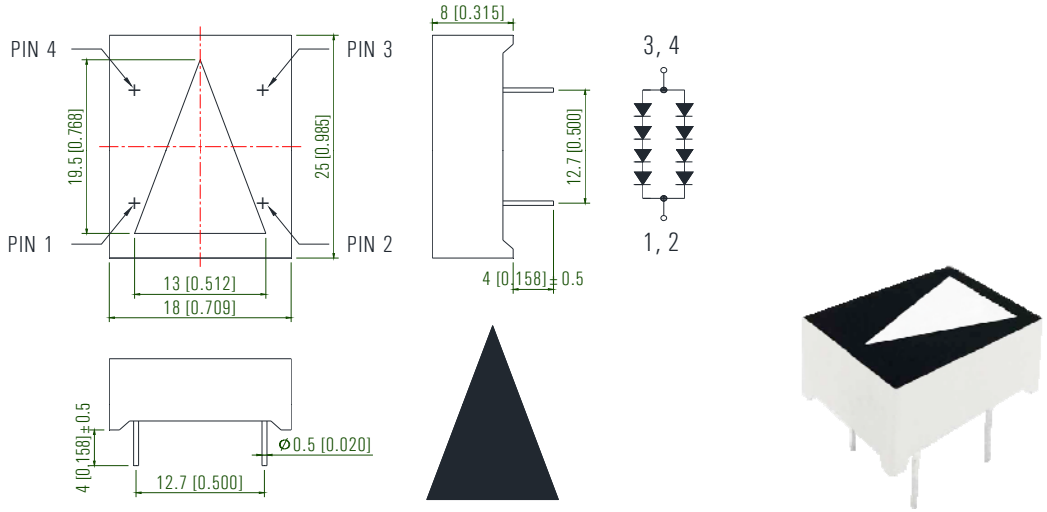

KWL-8011RB	Deep Red	630	Black	20	40.0	---
KWL-8011AB	Orange	605			50.0	---
KWL-8011GB	Yellow Green	572			20.0	---
KWL-8011GB-G5	Pure Green	525			100.0	---
KWL-8011BB	Blue	470			80.0	---
KWL-8011WB	White	x=0.30, y=0.31			100.0	---

53.8×29.8mm Light Bar LED Display

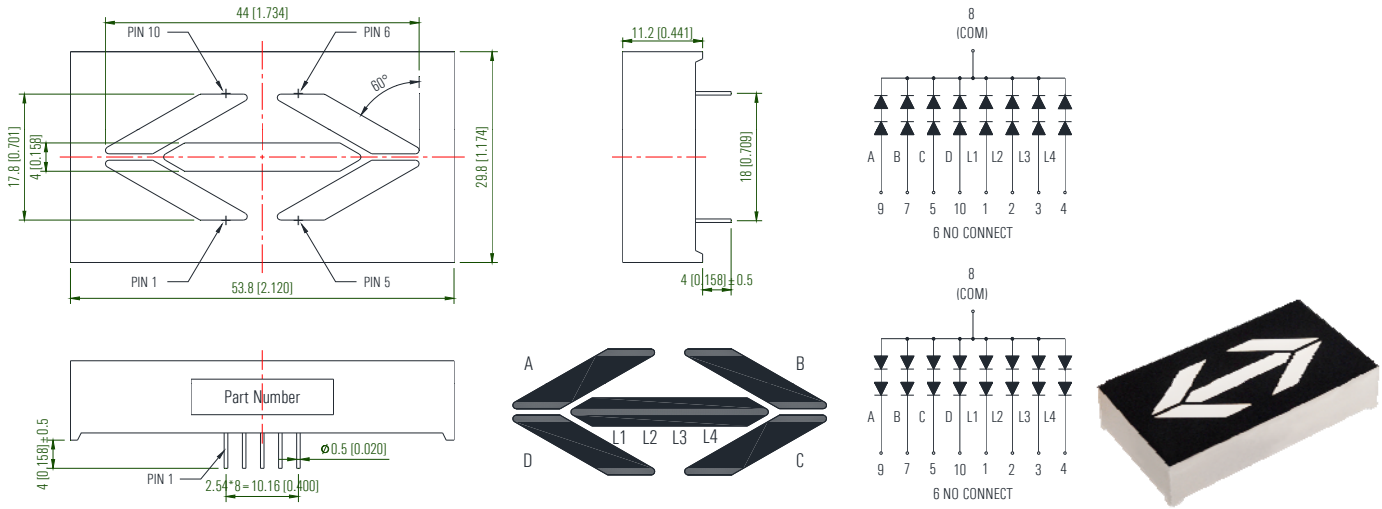

KWL-18021CRB	Deep Red	630	Black	20	40.0	Common Cathode
KWL-18021CAB	Orange	605			50.0	
KWL-18021CGB	Yellow Green	572			20.0	
KWL-18021CGB-G5	Pure Green	525			100.0	
KWL-18021CBB	Blue	470			80.0	
KWL-18021CWB	White	x=0.30, y=0.31			100.0	
KWL-18021ARB	Deep Red	630			40.0	Common Anode
KWL-18021AAB	Orange	605			50.0	
KWL-18021AGB	Yellow Green	572			20.0	
KWL-18021AGB-G5	Pure Green	525			100.0	
KWL-18021ABB	Blue	470			80.0	
KWL-18021AWB	White	x=0.30, y=0.31			100.0	

1. All dimensions are in millimeters (inches).
2. Tolerance is ±0.25mm (.010") unless otherwise noted.
3. Specifications are subject to change without notice.

Part Number	Emitting Color	λd (nm) / x, y	Face Color	Luminous Intensity Iv (cd/㎡) / Lux		Circuit Common
				IF=mA	Typ.	

38.70×11.90×2.20mm (L×W×H) LCD Backlight

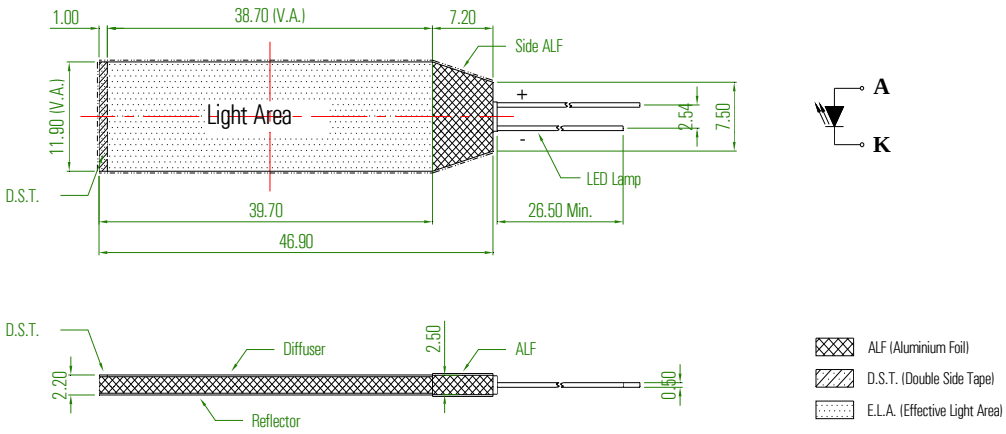

KWB-R3912-1B	Blue	470	White Diffused	10	70.0	---
KWB-R3912-1W	White	x=0.30, y=0.31			100.0	---

65.50×60.00×2.80mm (L×W×H) LCD Backlight

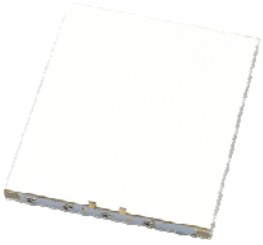

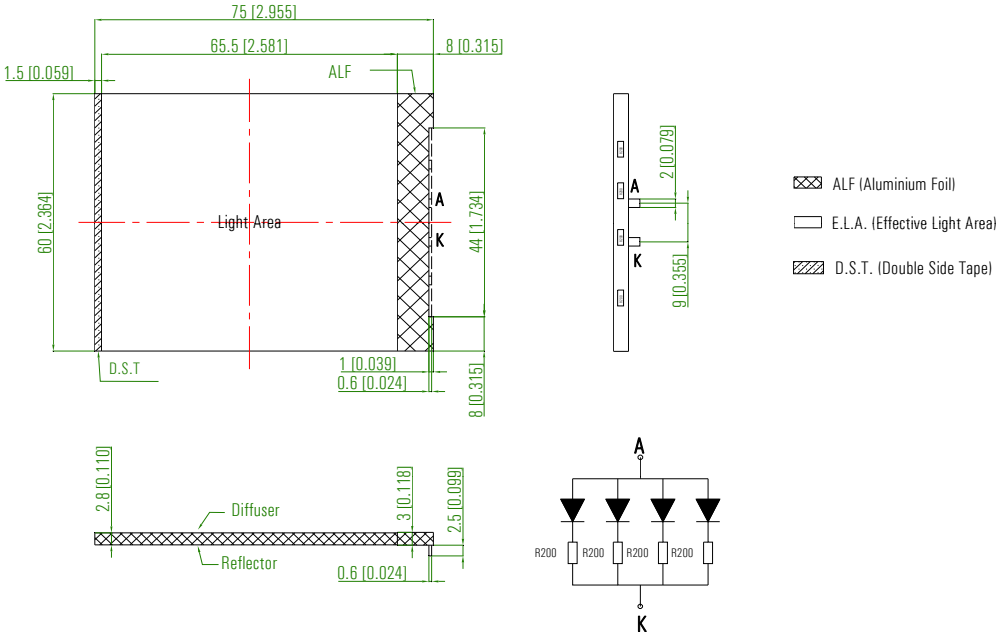

KWB-R6560-P4B	Blue	470	White Diffused	10	350.0	---
KWB-R6560-P4W	White	x=0.30, y=0.31			500.0	---

Part Number	Emitting Color	λd (nm) / x, y	Face Color	Luminous Intensity Iv (cd/㎡) / Lux		Circuit Common
				IF=mA	Typ.	

65.0×55.0×3.5mm (L×W×H) LCD Backlight

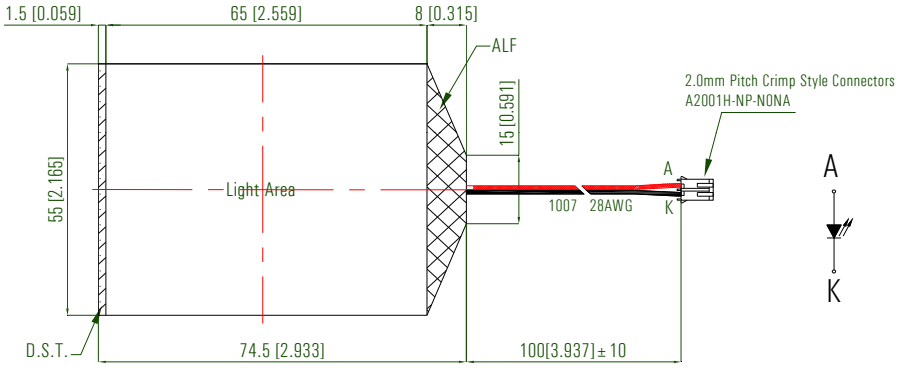

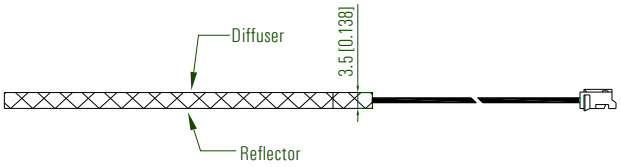

KWB-R6555-1B-L100-C	Blue	470	White Diffused	10	50.0	---
KWB-R6555-1W-L100-C	White	x=0.30, y=0.31			130.0	---

58mm Round LCD Backlight

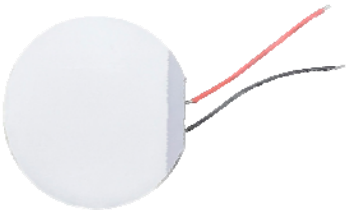

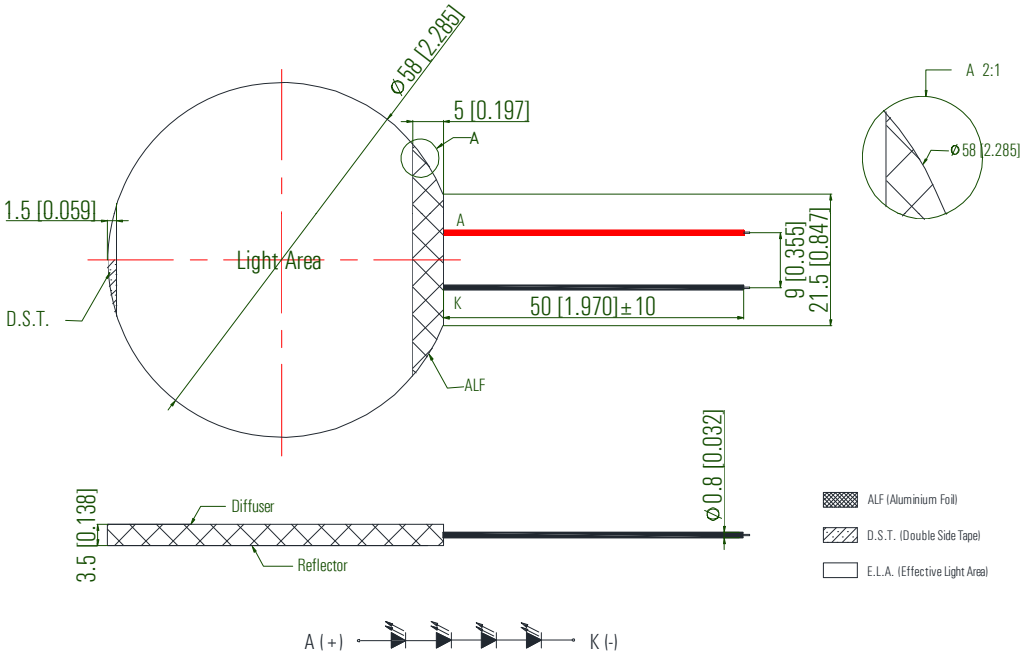

KWB-C583-4B-L50	Blue	470	White Diffused	10	200.0	---
KWB-C583-4W-L50	White	x=0.30, y=0.31			550.0	---

Part Number	Emitting Color	λd (nm) / x, y	Face Color	Luminous Intensity Iv (cd/㎡) / Lux		Circuit Common
				IF=mA	Typ.	

100.0×50.0×4.2mm (L×W×H) LCD Backlight

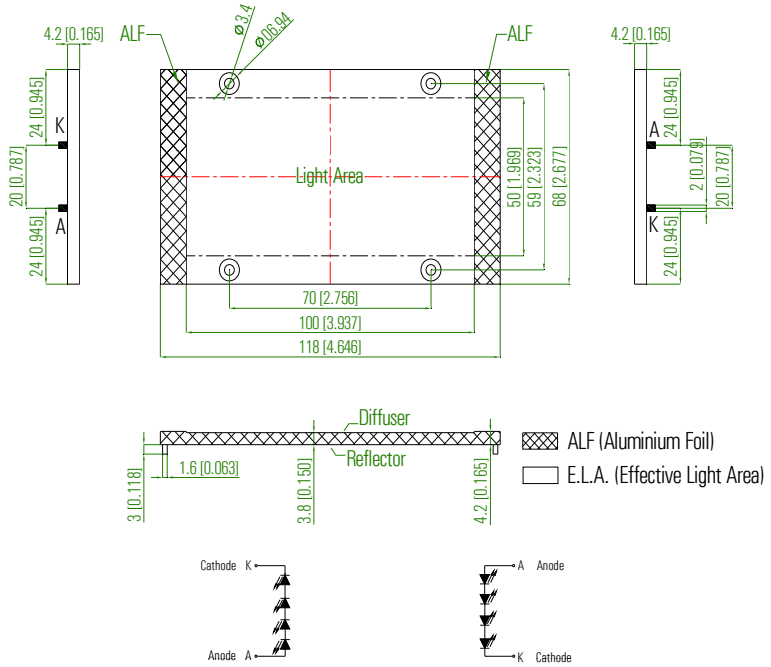

KWB-R10050-P8W-W2H-12V	White	x=0.30, y=0.31	White Diffused	20	16000 Lux	---

50.58×68.58×5.5mm (L×W×H) LCD Backlight

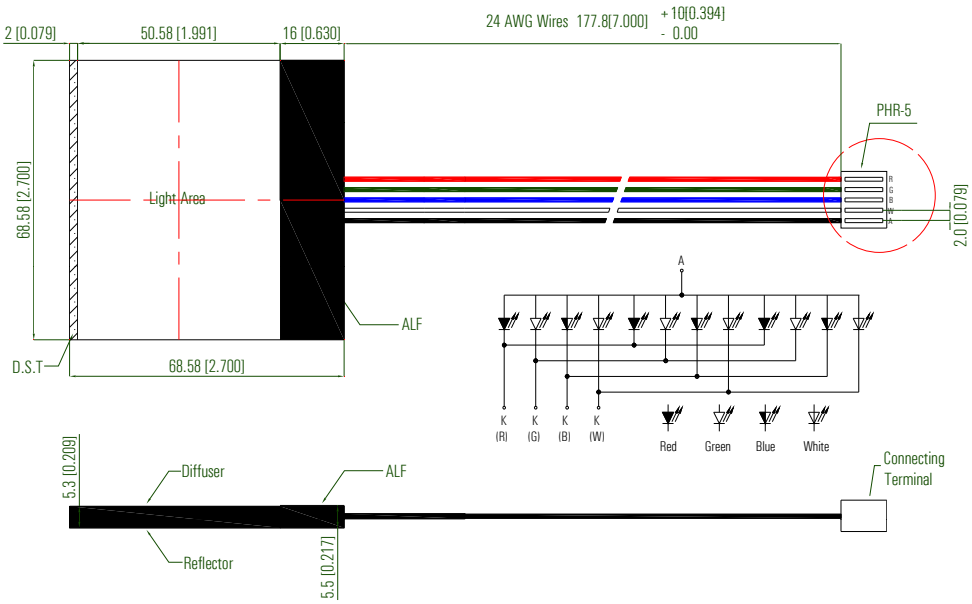

KWB-R5068-P3RGBW	Red	624	White Diffused	45	200.0	---
	Pure Green	525			480.0	---
	Blue	470			250.0	---
	White	x=0.30, y=0.31			500.0	---

Part Number	Emitting Color	λd (nm) / x, y	Face Color	Luminous Intensity Iv (cd/㎡) / Lux		Circuit Common
				IF=mA	Typ.	

84.0×45.0×3.3mm (L×W×H) LCD Backlight

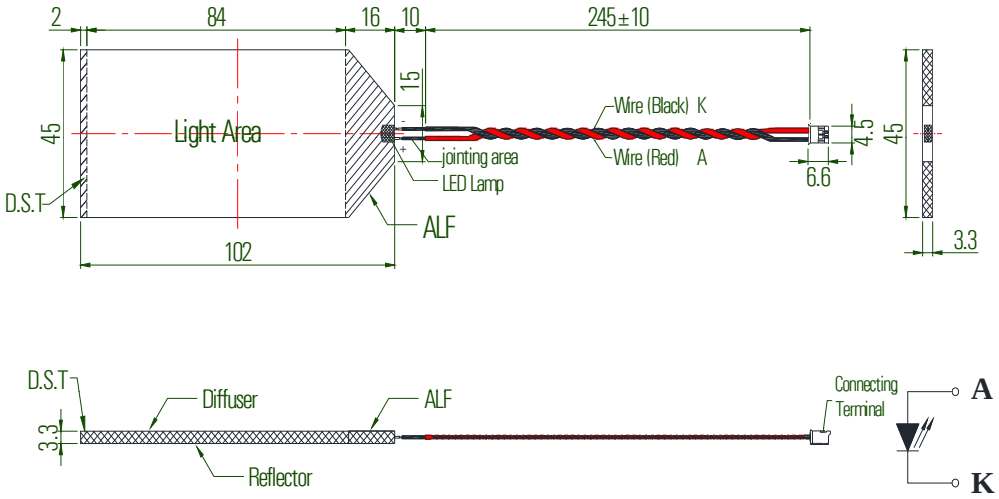

KWB-R8445-1B-L245-CT	Blue	470	White Diffused	10	35.0	---
KWB-R8445-1W-L245-CT	White	x=0.30, y=0.31			120.0	---

25.0×21.0×1.3mm (L×W×H) LCD Backlight

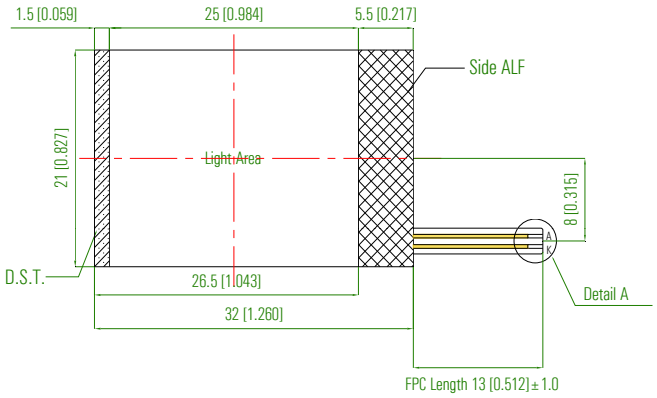

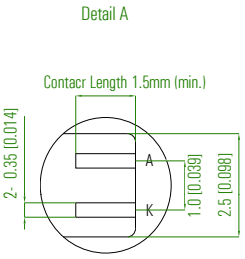

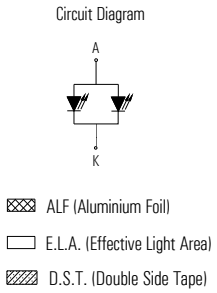

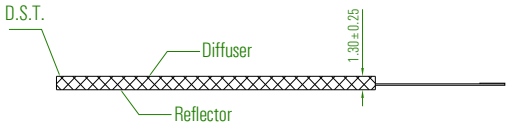

KWB-R2521-2B-FPC	Blue	470	White Diffused	20	80.0	---
KWB-R2521-2W-FPC	White	x=0.30, y=0.31			200.0	---

Part Number	Emitting Color	λd (nm) / x, y	Face Color	Luminous Intensity Iv (cd/㎡) / Lux		Circuit Common
				IF=mA	Typ.	

50.0×37.0×3.0mm (L×W×H) LCD Backlight

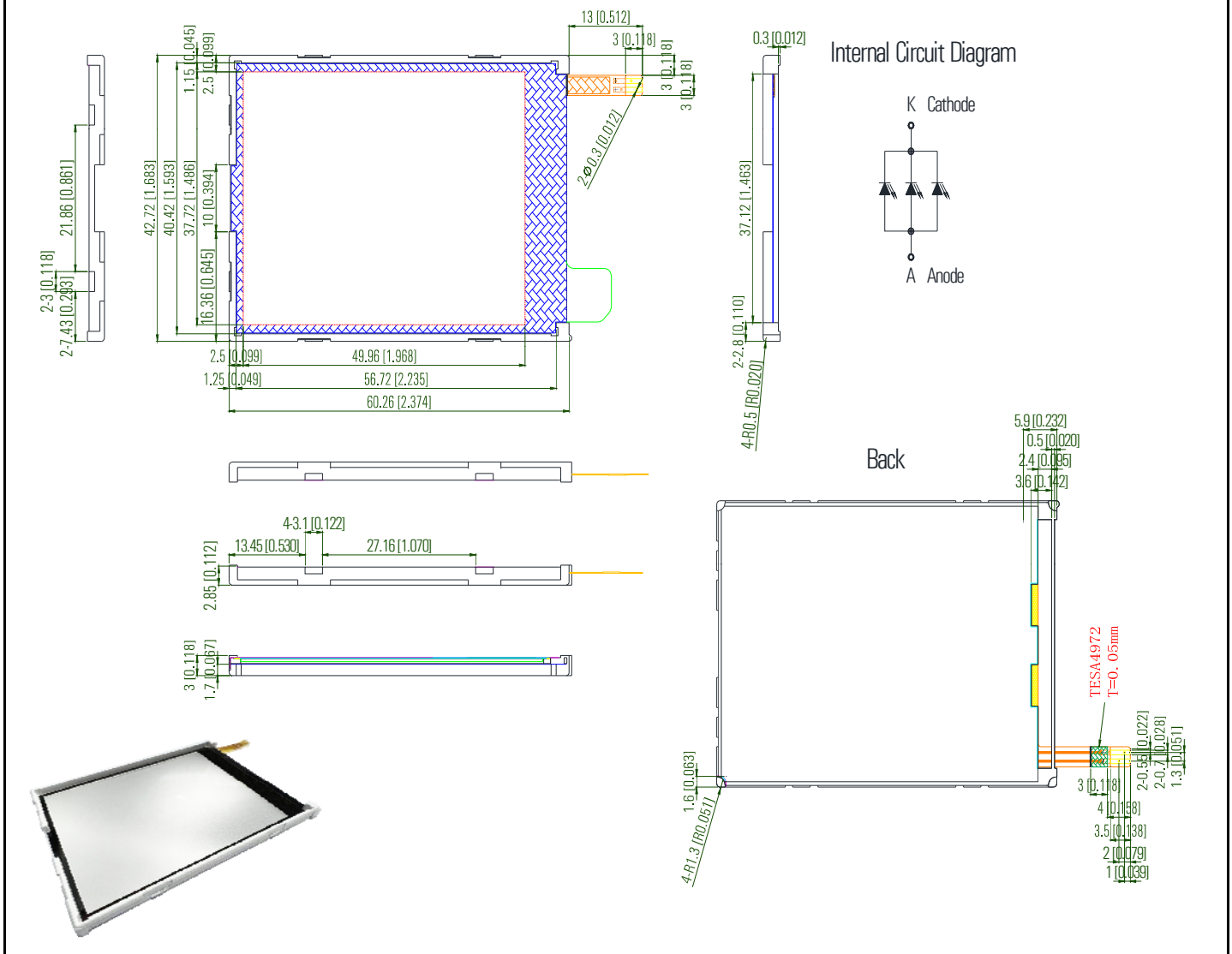

KWBS-R5037-3W-FPC	White	x=0.30, y=0.31	White Diffused	45	2000.0	---

1. All dimensions are in millimeters (inches).
2. Tolerance is ±0.25mm (.010") unless otherwise noted.
3. Specifications are subject to change without notice.

Part Number	Emitting Color	λd (nm) / x, y	Face Color	Luminous Intensity Iv (mcd)		Circuit Common
				IF=mA	Typ.	

0.20" Single Digit SMD Display

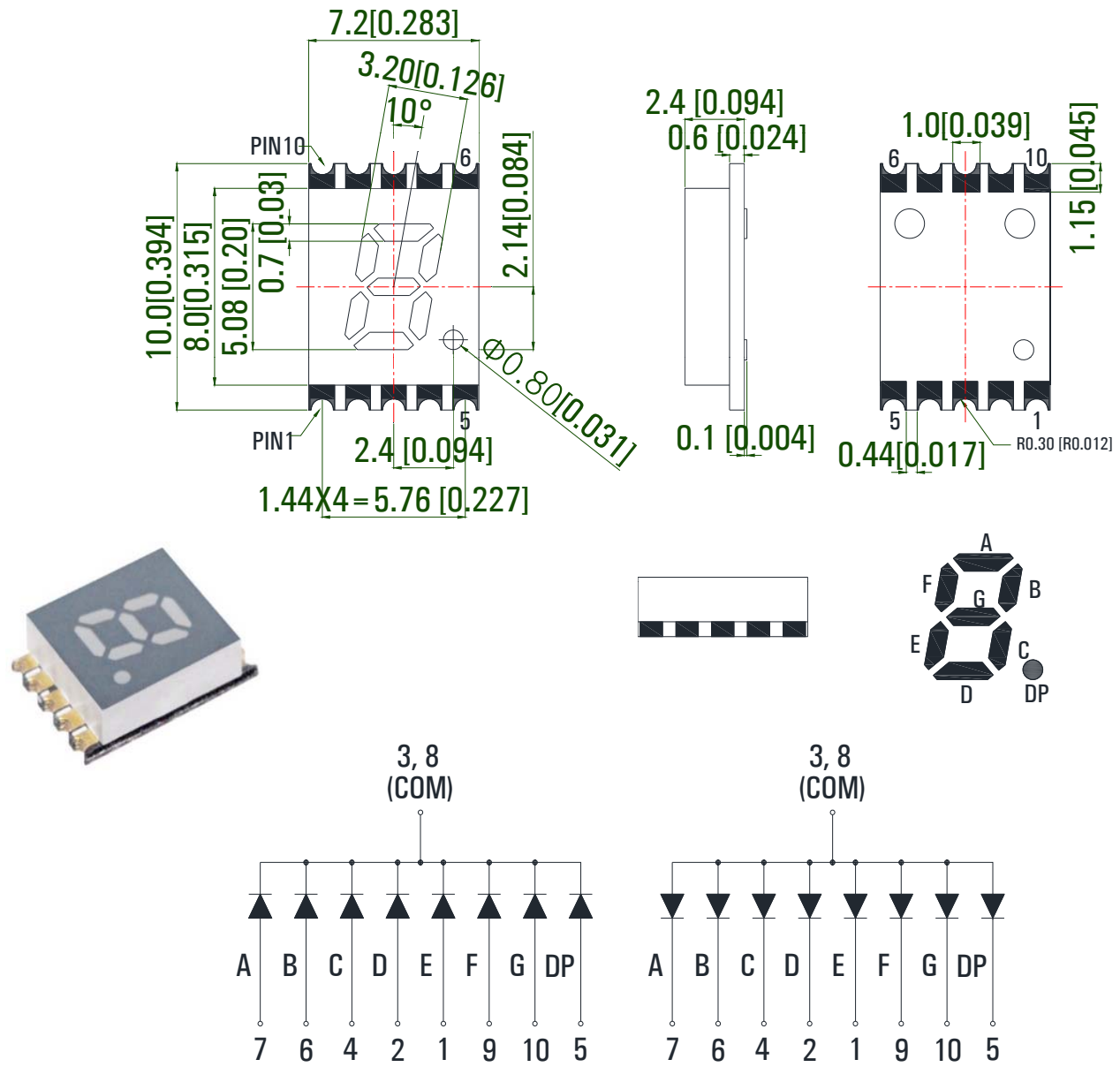

KW1-S202CRA	Deep Red	630	Gray	20	20.0	Common Cathode
KW1-S202CAA	Orange	605			32.0	
KW1-S202CGA	Yellow Green	572			10.0	
KW1-S202CGA-G5	Pure Green	525			50.0	
KW1-S202CBA	Blue	470			35.0	
KW1-S202CWA	White	x=0.30, y=0.31			60.0	
KW1-S202ARA	Deep Red	630			20.0	Common Anode
KW1-S202AAA	Orange	605			32.0	
KW1-S202AGA	Yellow Green	572			10.0	
KW1-S202AGA-G5	Pure Green	525			50.0	
KW1-S202ABA	Blue	470			35.0	
KW1-S202AWA	White	x=0.30, y=0.31			60.0	

Part Number	Emitting Color	λd (nm) / x, y	Face Color	Luminous Intensity Iv (mcd)		Circuit Common
				IF=mA	Typ.	

0.28" Single Digit SMD Display

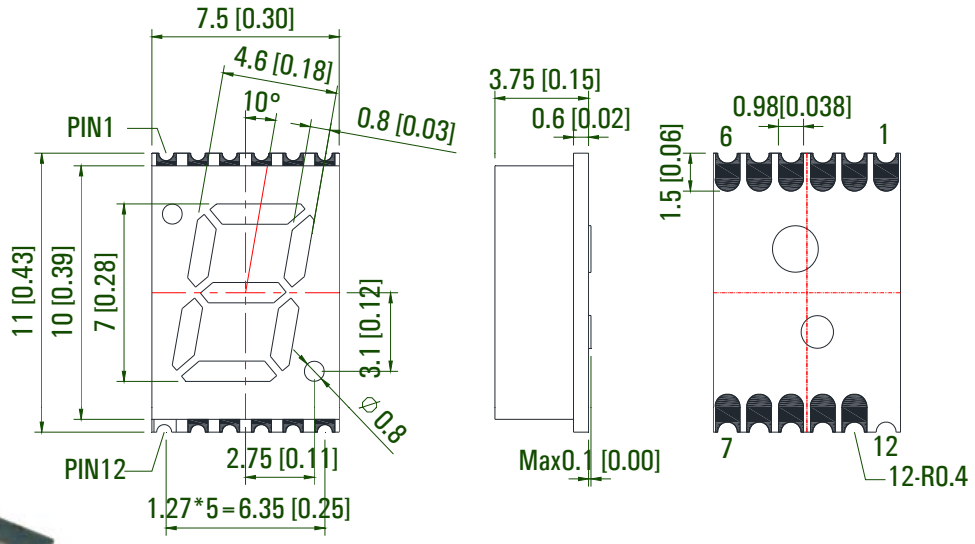

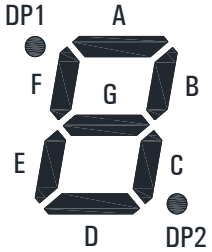

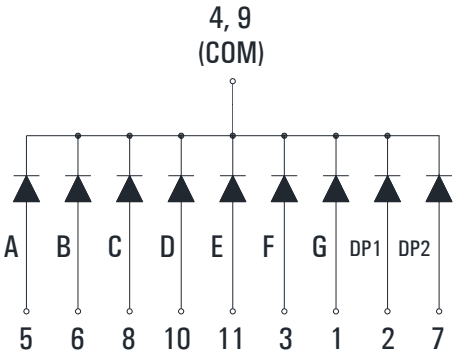

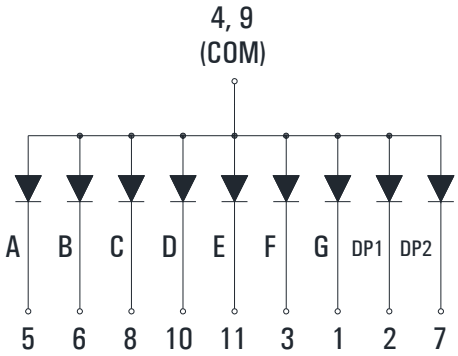

KW1-S281CRA	Deep Red	630	Gray	20	26.0	Common Cathode
KW1-S281CAA	Orange	605			34.0	
KW1-S281CGA	Yellow Green	572			14.0	
KW1-S281CGA-G5	Pure Green	525			55.0	
KW1-S281CBA	Blue	470			48.0	
KW1-S281CWA	White	x=0.30, y=0.31			68.0	
KW1-S281ARA	Deep Red	630			26.0	Common Anode
KW1-S281AAA	Orange	605			34.0	
KW1-S281AGA	Yellow Green	572			14.0	
KW1-S281AGA-G5	Pure Green	525			55.0	
KW1-S281ABA	Blue	470			48.0	
KW1-S281AWA	White	x=0.30, y=0.31			68.0	

Part Number	Emitting Color	λd (nm) / x, y	Face Color	Luminous Intensity Iv (mcd)		Circuit Common
				IF=mA	Typ.	

0.30" Single Digit SMD Display

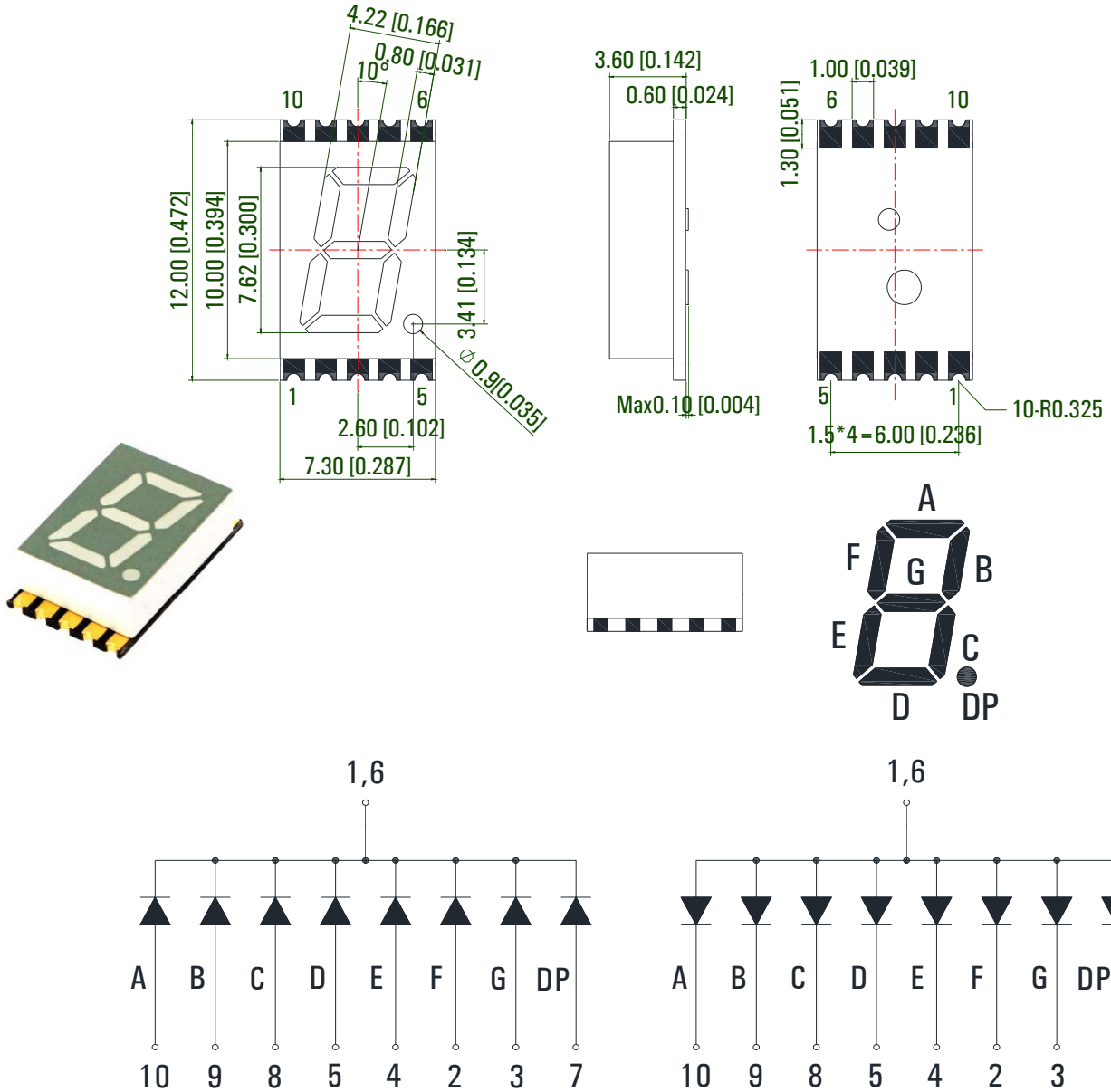

KW1-S301CRA	Deep Red	630	Gray	20	28.0	Common Cathode
KW1-S301CAA	Orange	605			36.0	
KW1-S301CGA	Yellow Green	572			16.0	
KW1-S301CGA-G5	Pure Green	525			60.0	
KW1-S301CBA	Blue	470			52.0	
KW1-S301CWA	White	x=0.30, y=0.31			70.0	
KW1-S301ARA	Deep Red	630			28.0	Common Anode
KW1-S301AAA	Orange	605			36.0	
KW1-S301AGA	Yellow Green	572			16.0	
KW1-S301AGA-G5	Pure Green	525			60.0	
KW1-S301ABA	Blue	470			52.0	
KW1-S301AWA	White	x=0.30, y=0.31			70.0	

Part Number	Emitting Color	λd (nm) / x, y	Face Color	Luminous Intensity Iv (mcd)		Circuit Common
				IF=mA	Typ.	

0.39" Single Digit SMD Display

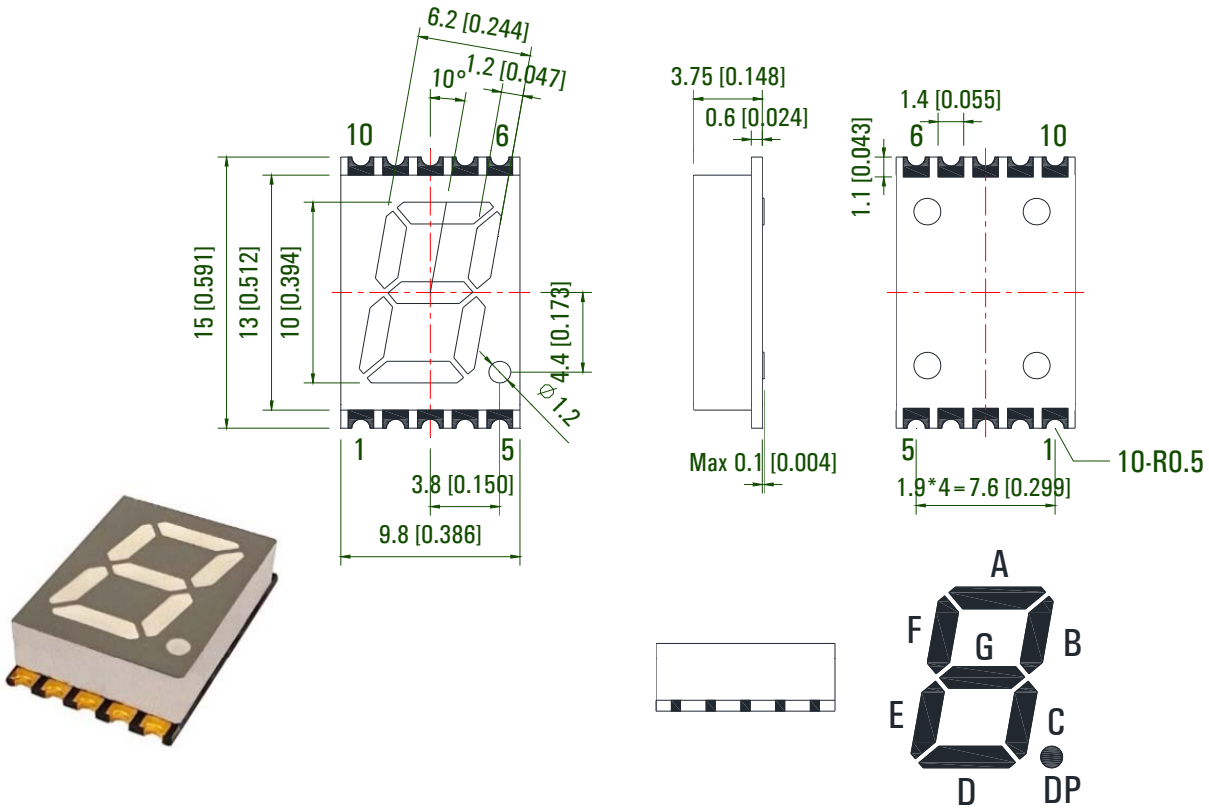

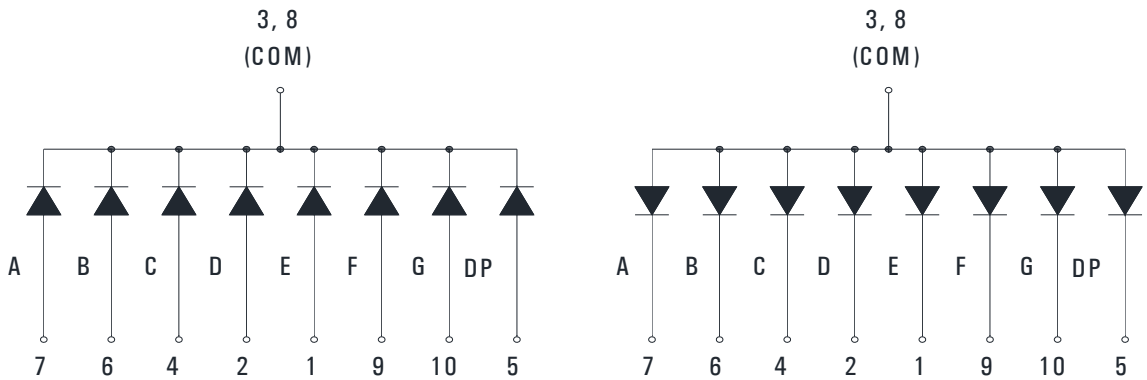

KW1-S391CRA	Deep Red	630	Gray	20	30.0	Common Cathode
KW1-S391CAA	Orange	605			38.0	
KW1-S391CGA	Yellow Green	572			18.0	
KW1-S391CGA-G5	Pure Green	525			66.0	
KW1-S391CBA	Blue	470			58.0	
KW1-S391CWA	White	x=0.30, y=0.31			72.0	
KW1-S391CRA	Deep Red	630			30.0	Common Anode
KW1-S391AAA	Orange	605			38.0	
KW1-S391AGA	Yellow Green	572			18.0	
KW1-S391AGA-G5	Pure Green	525			66.0	
KW1-S391ABA	Blue	470			58.0	
KW1-S391AWA	White	x=0.30, y=0.31			72.0	

Part Number	Emitting Color	λd (nm) / x, y	Face Color	Luminous Intensity Iv (mcd)		Circuit Common
				IF=mA	Typ.	

0.40" Single Digit SMD Display

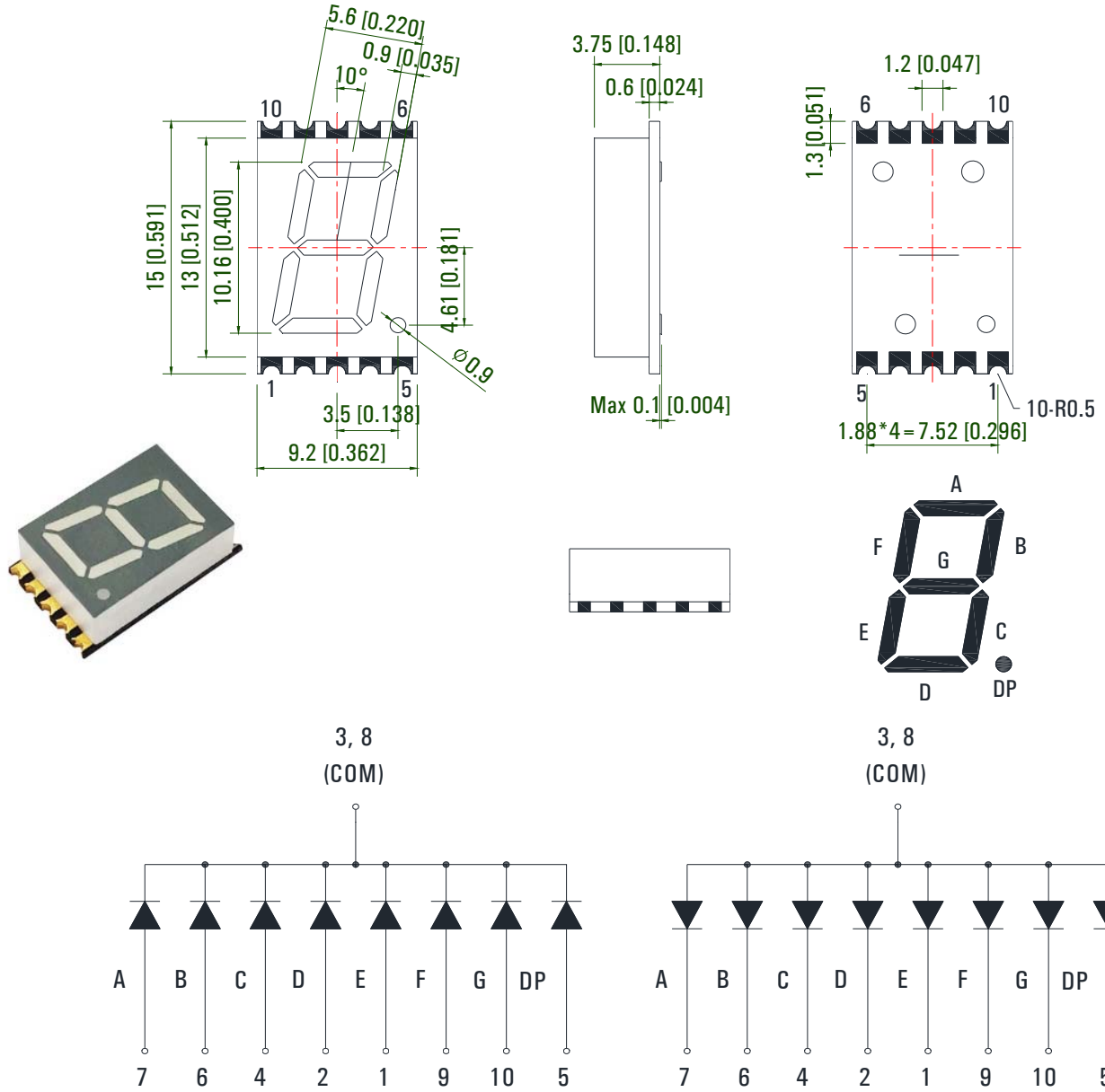

KW1-S402CRA	Deep Red	630	Gray	20	32.0	Common Cathode
KW1-S402CAA	Orange	605			40.0	
KW1-S402CGA	Yellow Green	572			20.0	
KW1-S402CGA-G5	Pure Green	525			68.0	
KW1-S402CBA	Blue	470			60.0	
KW1-S402CWA	White	x=0.30, y=0.31			74.0	
KW1-S402ARA	Deep Red	630			32.0	Common Anode
KW1-S402AAA	Orange	605			40.0	
KW1-S402AGA	Yellow Green	572			20.0	
KW1-S402AGA-G5	Pure Green	525			68.0	
KW1-S402ABA	Blue	470			60.0	
KW1-S402AWA	White	x=0.30, y=0.31			74.0	

Part Number	Emitting Color	λd (nm) / x, y	Face Color	Luminous Intensity Iv (mcd)		Circuit Common
				IF=mA	Typ.	

0.51" Single Digit SMD Display

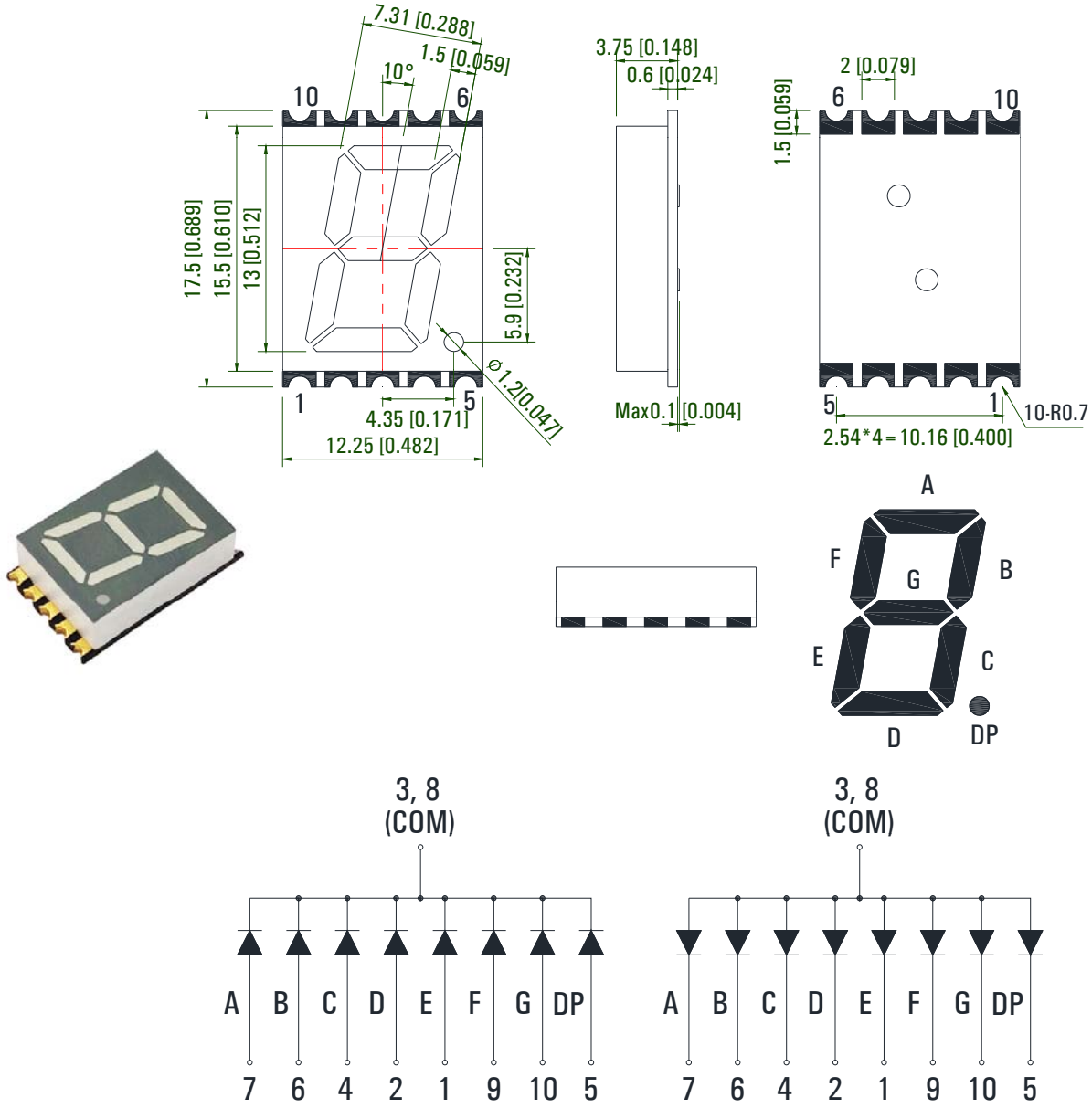

KW1-S511CRA	Deep Red	630	Gray	20	34.0	Common Cathode
KW1-S511CAA	Orange	605			42.0	
KW1-S511CGA	Yellow Green	572			22.0	
KW1-S511CGA-G5	Pure Green	525			70.0	
KW1-S511CBA	Blue	470			62.0	
KW1-S511CWA	White	x=0.30, y=0.31			76.0	
KW1-S511ARA	Deep Red	630			34.0	Common Anode
KW1-S511AAA	Orange	605			42.0	
KW1-S511AGA	Yellow Green	572			22.0	
KW1-S511AGA-G5	Pure Green	525			70.0	
KW1-S511ABA	Blue	470			62.0	
KW1-S511AWA	White	x=0.30, y=0.31			76.0	

Part Number	Emitting Color	λd (nm) / x, y	Face Color	Luminous Intensity Iv (mcd)		Circuit Common
				IF=mA	Typ.	

0.56" Single Digit SMD Display

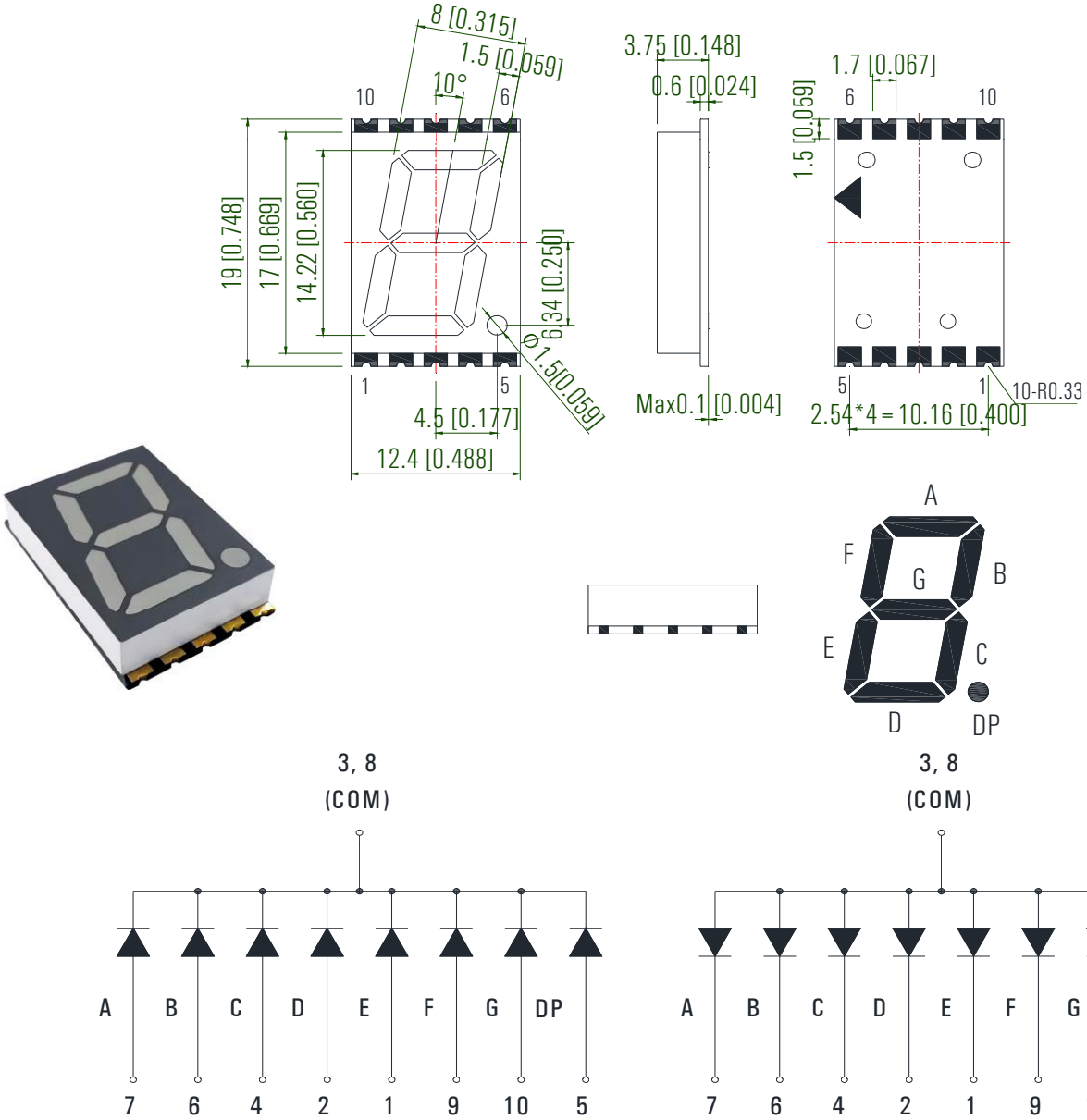

KW1-S562CRA	Deep Red	630	Gray	20	36.0	Common Cathode
KW1-S562CAA	Orange	605			44.0	
KW1-S562CGA	Yellow Green	572			24.0	
KW1-S562CGA-G5	Pure Green	525			72.0	
KW1-S562CBA	Blue	470			64.0	
KW1-S562CWA	White	x=0.30, y=0.31			78.0	
KW1-S562ARA	Deep Red	630			36.0	Common Anode
KW1-S562AAA	Orange	605			44.0	
KW1-S562AGA	Yellow Green	572			24.0	
KW1-S562AGA-G5	Pure Green	525			72.0	
KW1-S562ABA	Blue	470			64.0	
KW1-S562AWA	White	x=0.30, y=0.31			78.0	

Part Number	Emitting Color	λd (nm) / x, y	Face Color	Luminous Intensity Iv (mcd)		Circuit Common
				IF=mA	Typ.	

0.80" Single Digit SMD Display

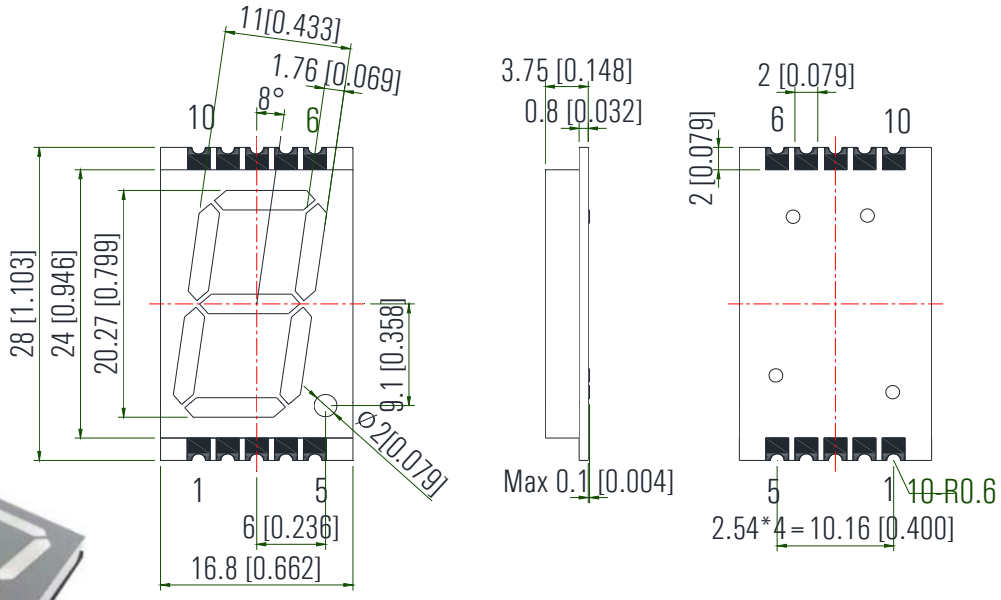

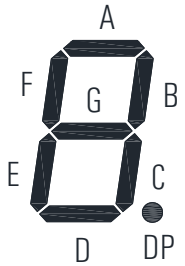

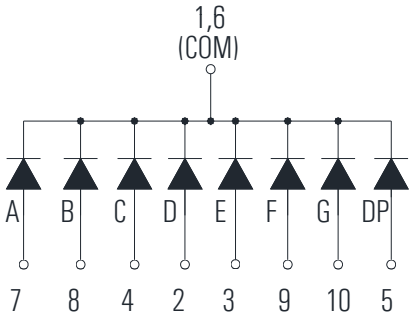

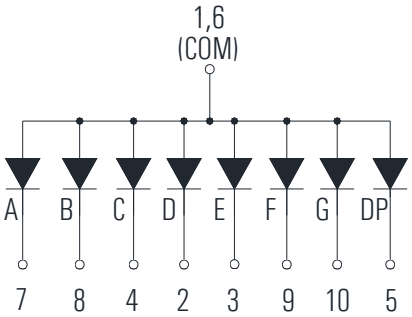

KW1-S802CRA	Deep Red	630	Gray	20	40.0	Common Cathode
KW1-S802CAA	Orange	605			48.0	
KW1-S802CGA	Yellow Green	572			28.0	
KW1-S802CGA-G5	Pure Green	525			76.0	
KW1-S802CBA	Blue	470			68.0	
KW1-S802CWA	White	x=0.30, y=0.31			82.0	
KW1-S802ARA	Deep Red	630			40.0	Common Anode
KW1-S802AAA	Orange	605			48.0	
KW1-S802AGA	Yellow Green	572			28.0	
KW1-S802AGA-G5	Pure Green	525			76.0	
KW1-S802ABA	Blue	470			68.0	
KW1-S802AWA	White	x=0.30, y=0.31			82.0	

Part Number	Emitting Color	λd (nm) / x, y	Face Color	Luminous Intensity Iv (mcd)		Circuit Common
				IF=mA	Typ.	

0.20" Dual Digit SMD Display

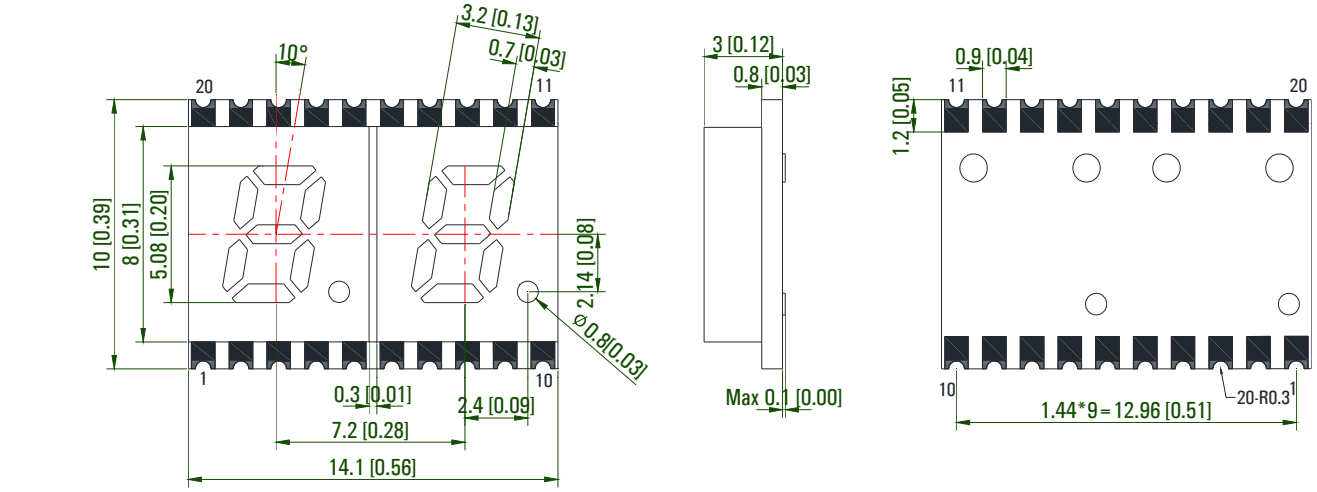

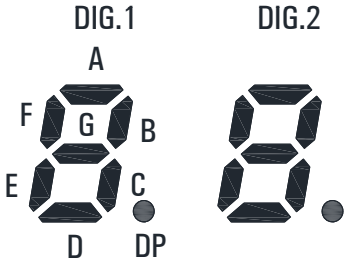

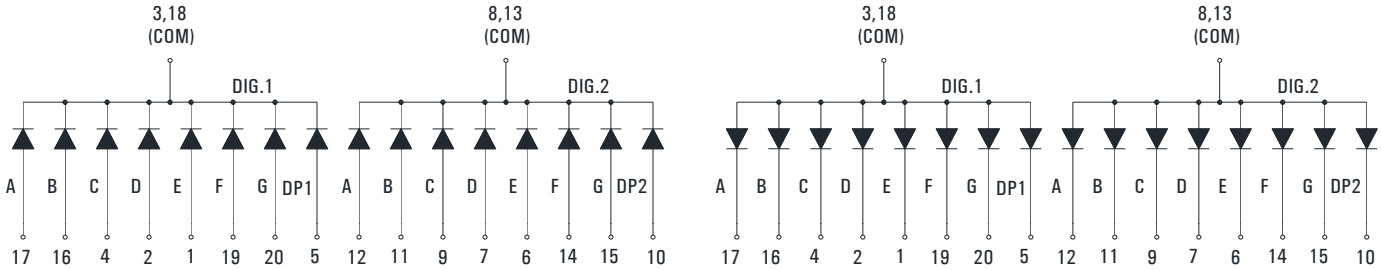

KW2-S201CRA	Deep Red	630	Gray	20	20.0	Common Cathode
KW2-S201CAA	Orange	605			32.0	
KW2-S201CGA	Yellow Green	572			10.0	
KW2-S201CGA-G5	Pure Green	525			50.0	
KW2-S201CBA	Blue	470			35.0	
KW2-S201ARA	Deep Red	630			20.0	Common Anode
KW2-S201AAA	Orange	605			32.0	
KW2-S201AGA	Yellow Green	572			10.0	
KW2-S201AGA-G5	Pure Green	525			50.0	
KW2-S201ABA	Blue	470			35.0	

Part Number	Emitting Color	λd (nm) / x, y	Face Color	Luminous Intensity Iv (mcd)		Circuit Common
				IF=mA	Typ.	

0.28" Dual Digit SMD Display

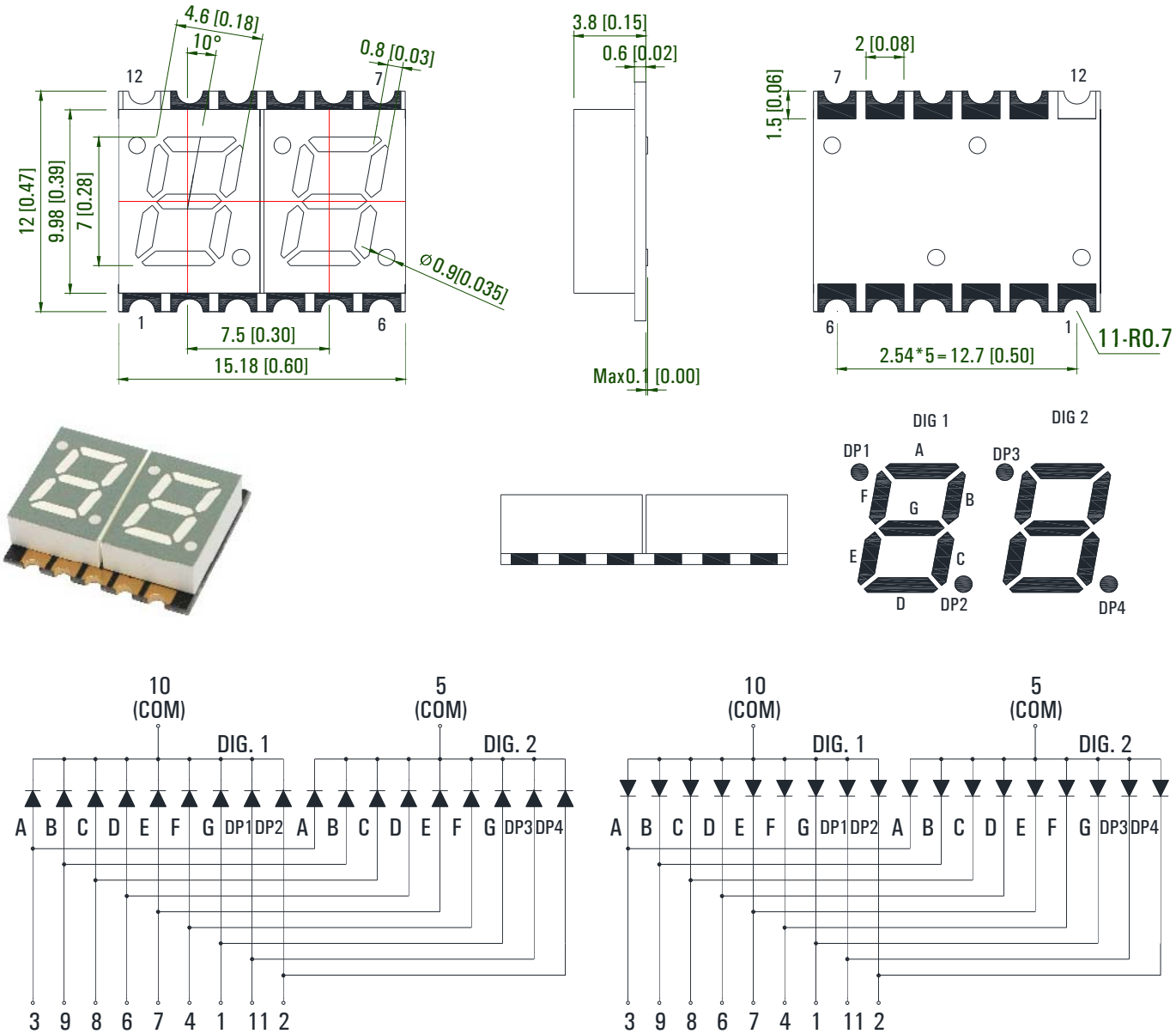

KW2-S281CRA	Deep Red	630	Gray	20	26.0	Common Cathode
KW2-S281CAA	Orange	605			34.0	
KW2-S281CGA	Yellow Green	572			14.0	
KW2-S281CGA-G5	Pure Green	525			55.0	
KW2-S281CBA	Blue	470			48.0	
KW2-S281CWA	White	x=0.30, y=0.31			68.0	
KW2-S281ARA	Deep Red	630			26.0	Common Anode
KW2-S281AAA	Orange	605			34.0	
KW2-S281AGA	Yellow Green	572			14.0	
KW2-S281AGA-G5	Pure Green	525			55.0	
KW2-S281ABA	Blue	470			48.0	
KW2-S281AWA	White	x=0.30, y=0.31			68.0	

Part Number	Emitting Color	λd (nm) / x, y	Face Color	Luminous Intensity Iv (mcd)		Circuit Common
				IF=mA	Typ.	

0.30" Dual Digit SMD Display

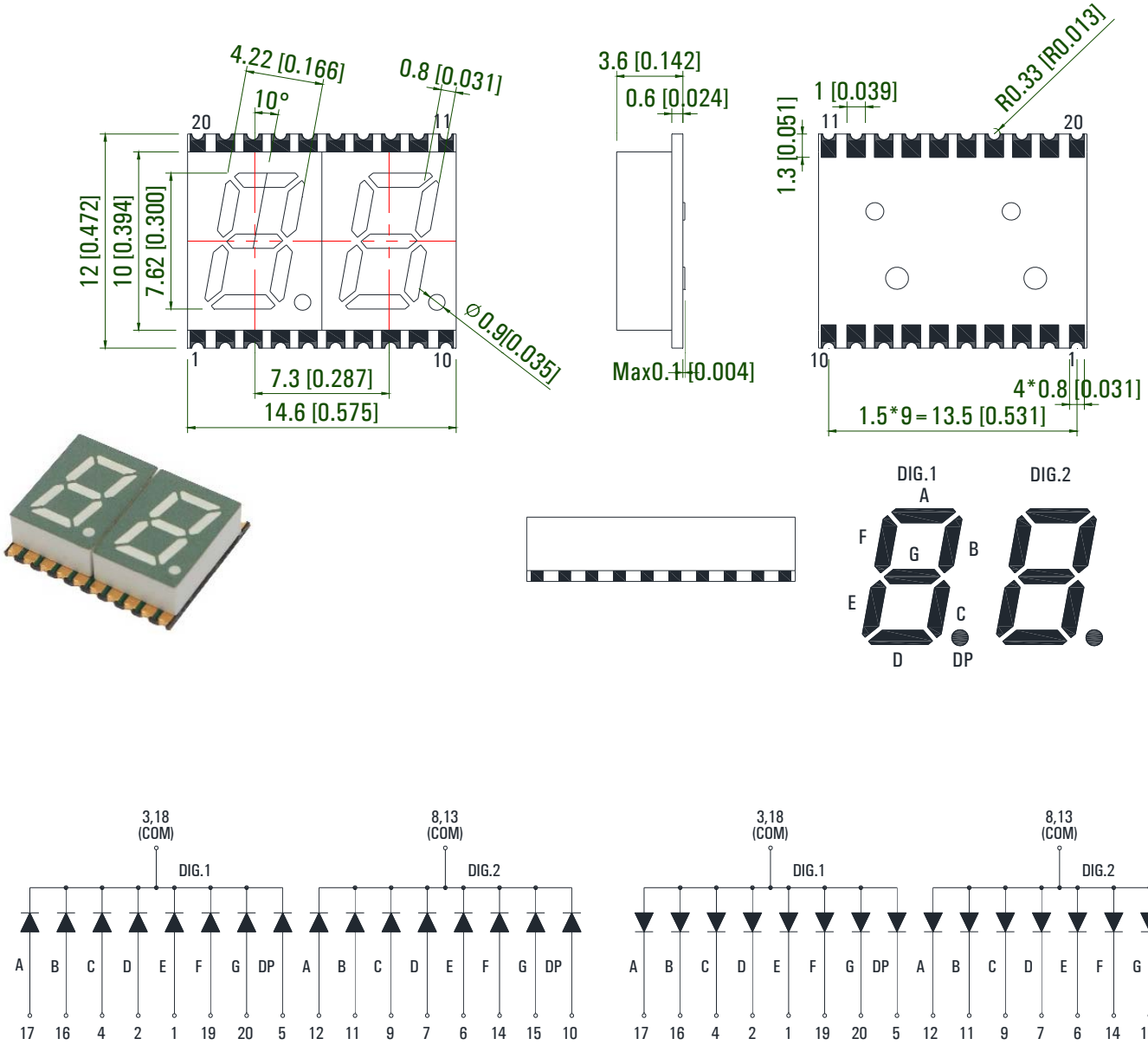

KW2-S303CRA	Deep Red	630	Gray	20	28.0	Common Cathode
KW2-S303CAA	Orange	605			36.0	
KW2-S303CGA	Yellow Green	572			16.0	
KW2-S303CGA-G5	Pure Green	525			60.0	
KW2-S303CBA	Blue	470			52.0	
KW2-S303CWA	White	x=0.30, y=0.31			70.0	
KW2-S303ARA	Deep Red	630			28.0	Common Anode
KW2-S303AAA	Orange	605			36.0	
KW2-S303AGA	Yellow Green	572			16.0	
KW2-S303AGA-G5	Pure Green	525			60.0	
KW2-S303ABA	Blue	470			52.0	
KW2-S303AWA	White	x=0.30, y=0.31			70.0	

Part Number	Emitting Color	λd (nm) / x, y	Face Color	Luminous Intensity Iv (mcd)		Circuit Common
				IF=mA	Typ.	

0.39" Dual Digit SMD Display

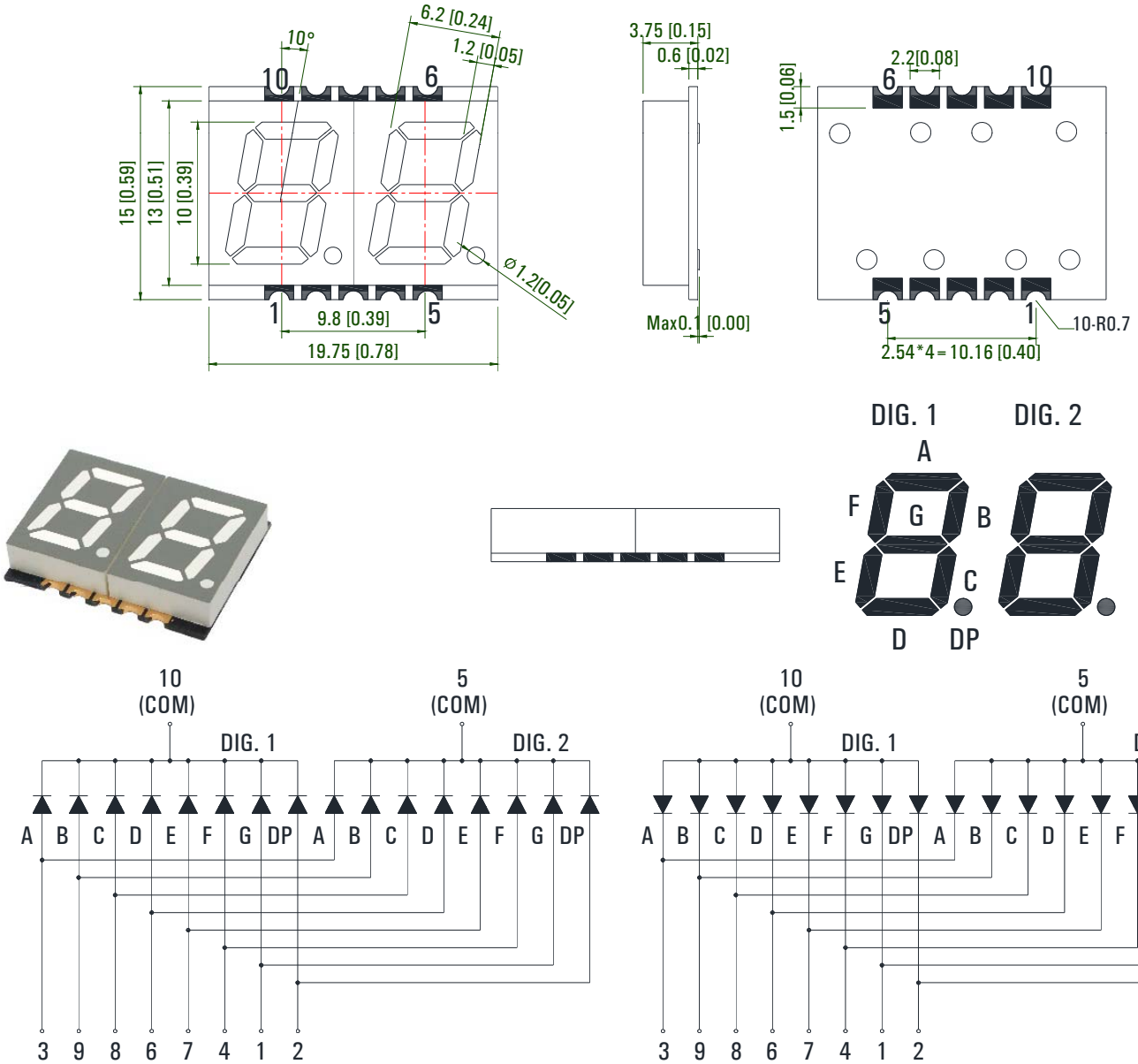

KW2-S391CRA	Deep Red	630	Gray	20	30.0	Common Cathode
KW2-S391CAA	Orange	605			38.0	
KW2-S391CGA	Yellow Green	572			18.0	
KW2-S391CGA-G5	Pure Green	525			66.0	
KW2-S391CBA	Blue	470			58.0	
KW2-S391CWA	White	x=0.30, y=0.31			72.0	
KW2-S391CRA	Deep Red	630			30.0	Common Anode
KW2-S391CAA	Orange	605			38.0	
KW2-S391CGA	Yellow Green	572			18.0	
KW2-S391CGA-G5	Pure Green	525			66.0	
KW2-S391CBA	Blue	470			58.0	
KW2-S391CWA	White	x=0.30, y=0.31			72.0	

Part Number	Emitting Color	λd (nm) / x, y	Face Color	Luminous Intensity Iv (mcd)		Circuit Common
				IF=mA	Typ.	

0.40" Dual Digit SMD Display

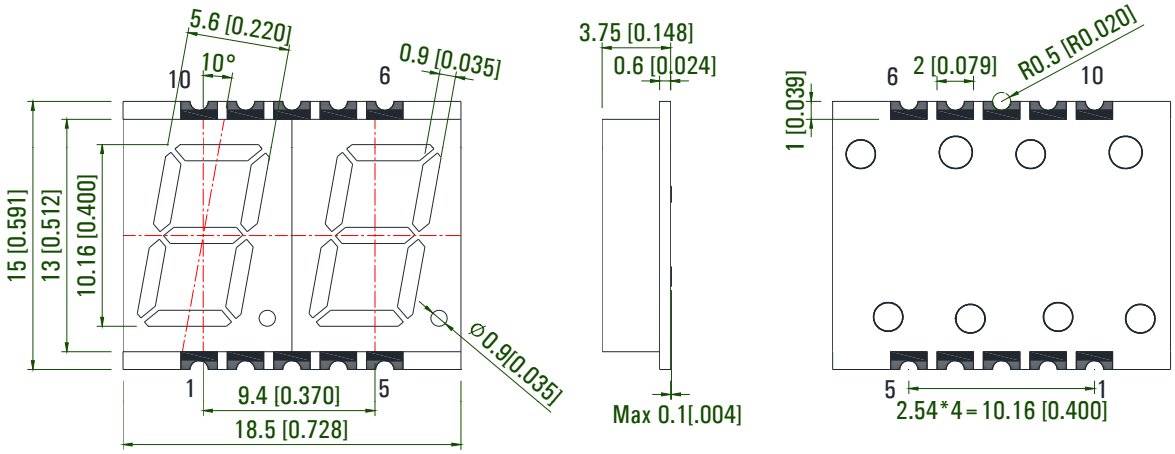

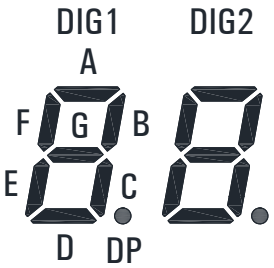

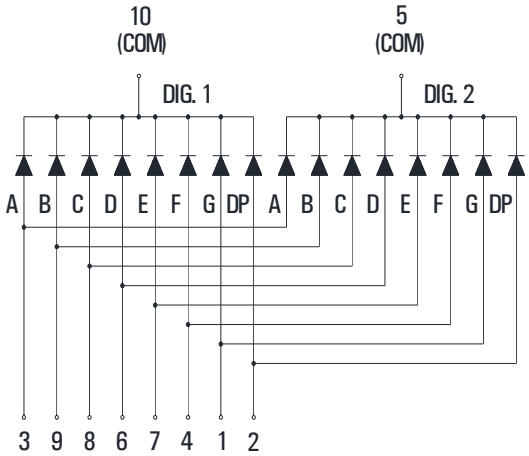

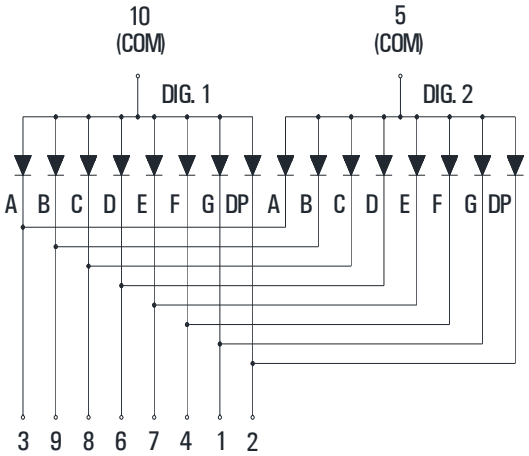

KW2-S401CRA	Deep Red	630	Gray	20	32.0	Common Cathode
KW2-S401CAA	Orange	605			40.0	
KW2-S401CGA	Yellow Green	572			20.0	
KW2-S401CGA-G5	Pure Green	525			68.0	
KW2-S401CBA	Blue	470			60.0	
KW2-S401CWA	White	x=0.30, y=0.31			74.0	
KW2-S401ARA	Deep Red	630			32.0	Common Anode
KW2-S401AAA	Orange	605			40.0	
KW2-S401AGA	Yellow Green	572			20.0	
KW2-S401AGA-G5	Pure Green	525			68.0	
KW2-S401ABA	Blue	470			60.0	
KW2-S401AWA	White	x=0.30, y=0.31			74.0	

Part Number	Emitting Color	λd (nm) / x, y	Face Color	Luminous Intensity Iv (mcd)		Circuit Common
				IF=mA	Typ.	

0.51" Dual Digit SMD Display

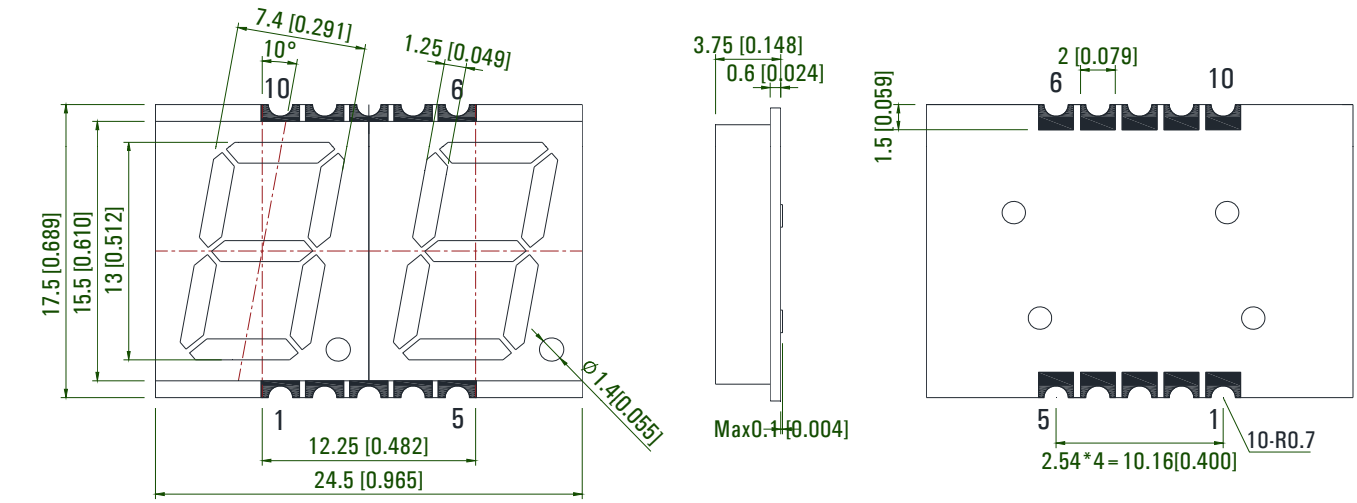

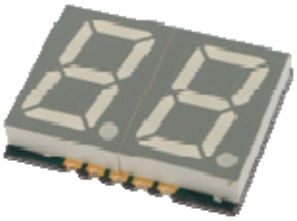

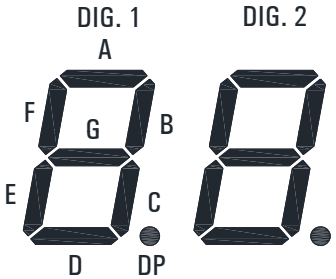

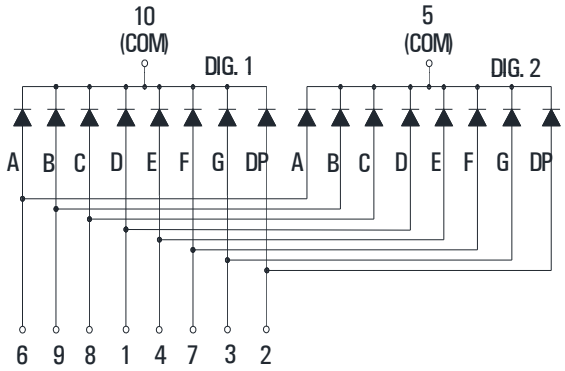

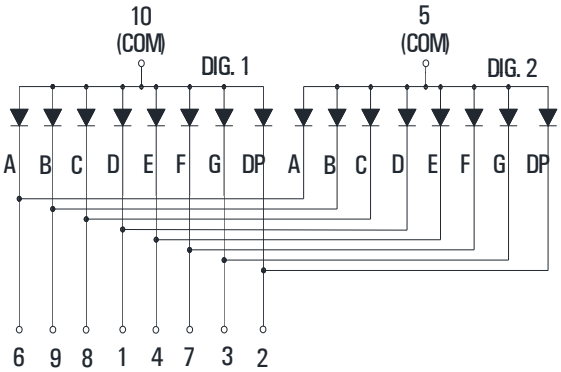

KW2-S511CRA	Deep Red	630	Gray	20	34.0	Common Cathode
KW2-S511CAA	Orange	605			42.0	
KW2-S511CGA	Yellow Green	572			22.0	
KW2-S511CGA -G5	Pure Green	525			70.0	
KW2-S511CBA	Blue	470			62.0	
KW2-S511CWA	White	x=0.30, y=0.31			76.0	
KW2-S511ARA	Deep Red	630			34.0	Common Anode
KW2-S511AAA	Orange	605			42.0	
KW2-S511AGA	Yellow Green	572			22.0	
KW2-S511AGA -G5	Pure Green	525			70.0	
KW2-S511ABA	Blue	470			62.0	
KW2-S511AWA	White	x=0.30, y=0.31			76.0	

Part Number	Emitting Color	λd (nm) / x, y	Face Color	Luminous Intensity Iv (mcd)		Circuit Common
				IF=mA	Typ.	

0.56" Dual Digit SMD Display

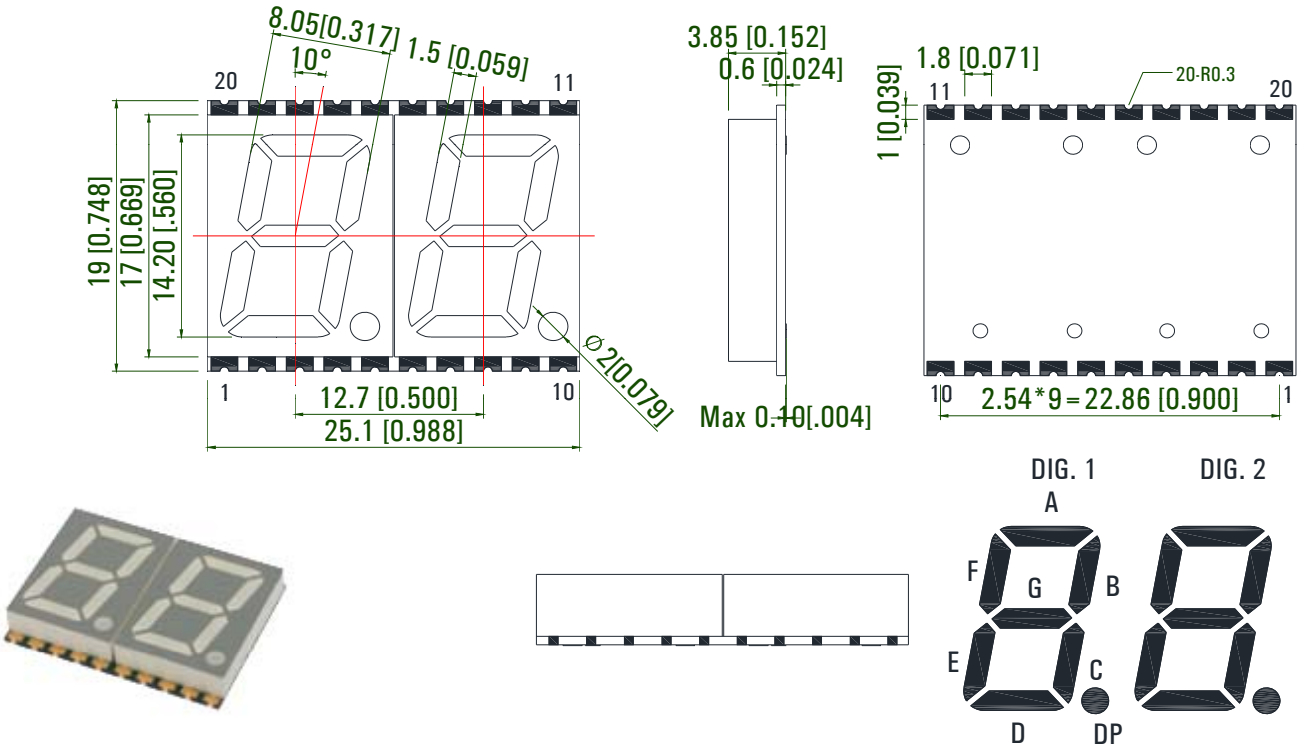

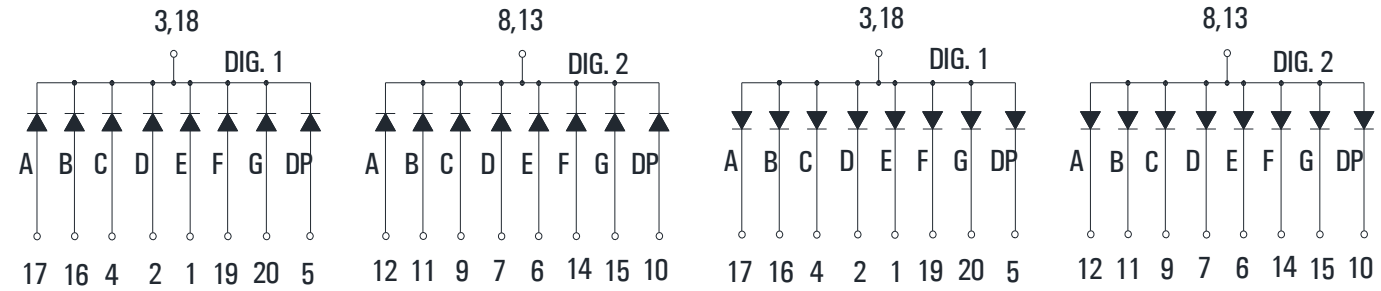

KW2-S563CRA	Deep Red	630	Gray	20	36.0	Common Cathode
KW2-S563CAA	Orange	605			44.0	
KW2-S563CGA	Yellow Green	572			24.0	
KW2-S563CGA-G5	Pure Green	525			72.0	
KW2-S563CBA	Blue	470			64.0	
KW2-S563CWA	White	x=0.30, y=0.31			78.0	
KW2-S563ARA	Deep Red	630			36.0	Common Anode
KW2-S563AAA	Orange	605			44.0	
KW2-S563AGA	Yellow Green	572			24.0	
KW2-S563AGA-G5	Pure Green	525			72.0	
KW2-S563ABA	Blue	470			64.0	
KW2-S563AWA	White	x=0.30, y=0.31			78.0	

Part Number	Emitting Color	λd (nm) / x, y	Face Color	Luminous Intensity Iv (mcd)		Circuit Common
				IF=mA	Typ.	

0.20" Triple Digit SMD Display

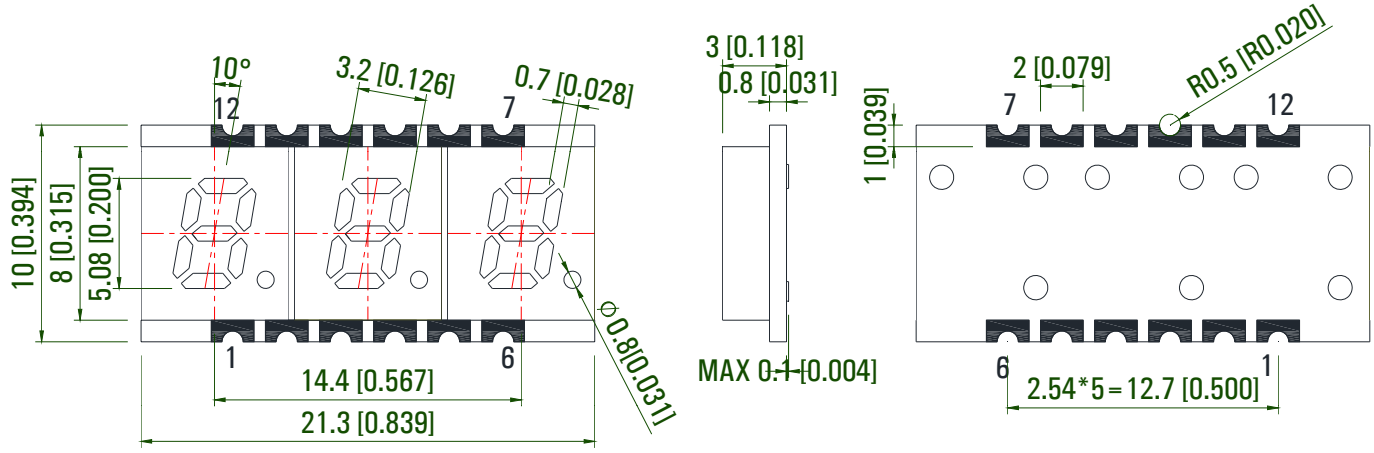

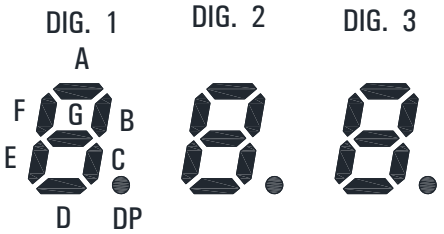

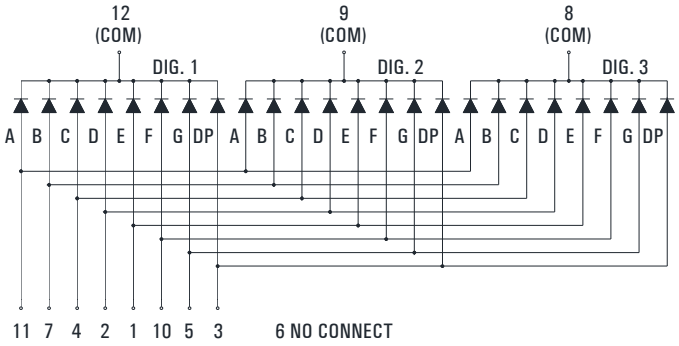

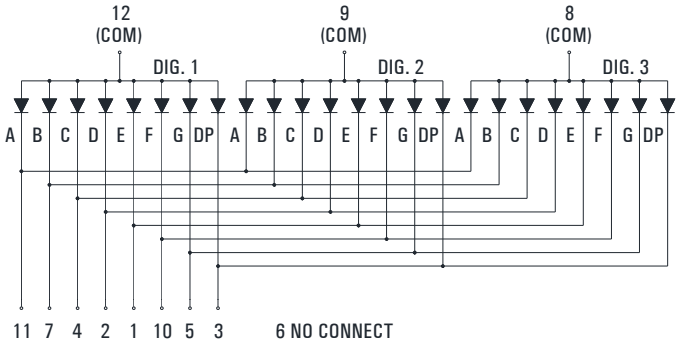

KW3-S201CRA	Deep Red	630	Gray	20	20.0	Common Cathode
KW3-S201CAA	Orange	605			32.0	
KW3-S201CGA	Yellow Green	572			10.0	
KW3-S201CGA-G5	Pure Green	525			50.0	
KW3-S201CBA	Blue	470			35.0	
KW3-S201ARA	Deep Red	630			20.0	Common Anode
KW3-S201AAA	Orange	605			32.0	
KW3-S201AGA	Yellow Green	572			10.0	
KW3-S201AGA-G5	Pure Green	525			50.0	
KW3-S201ABA	Blue	470			35.0	

Part Number	Emitting Color	λd (nm) / x, y	Face Color	Luminous Intensity Iv (mcd)		Circuit Common
				IF=mA	Typ.	

0.28" Triple Digit SMD Display

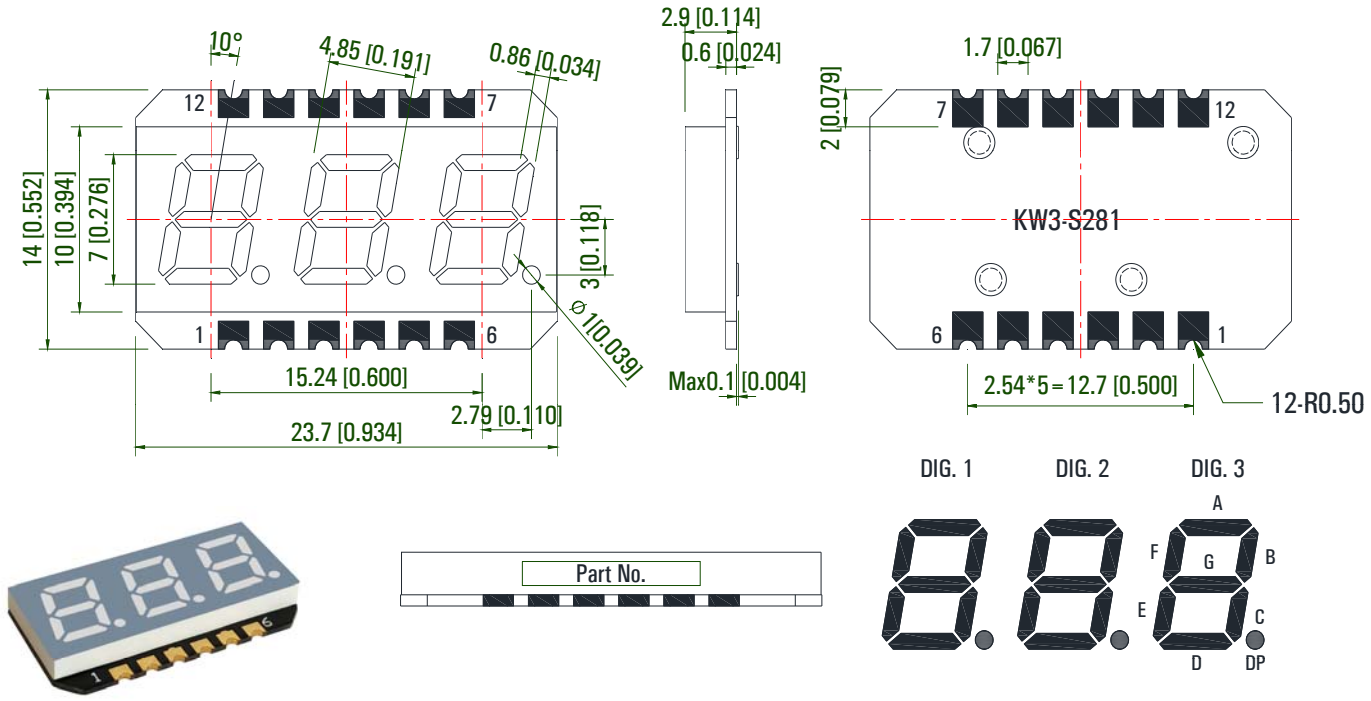

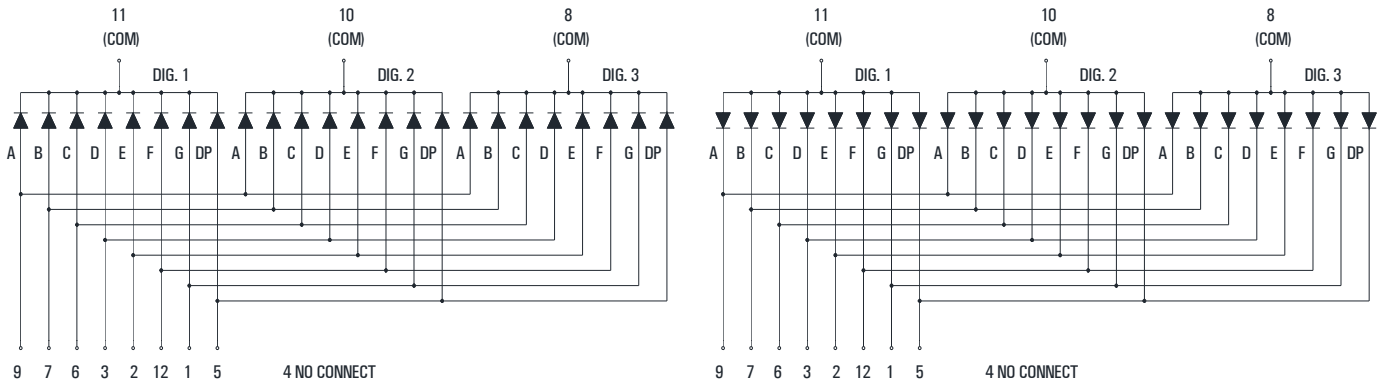

KW3-S281CRA	Deep Red	630	Gray	20	26.0	Common Cathode
KW3-S281CAA	Orange	605			34.0	
KW3-S281CGA	Yellow Green	572			14.0	
KW3-S281CGA-G5	Pure Green	525			55.0	
KW3-S281CBA	Blue	470			48.0	
KW3-S281CWA	White	x=0.30, y=0.31			68.0	
KW3-S281ARA	Deep Red	630			26.0	Common Anode
KW3-S281AAA	Orange	605			34.0	
KW3-S281AGA	Yellow Green	572			14.0	
KW3-S281AGA-G5	Pure Green	525			55.0	
KW3-S281ABA	Blue	470			48.0	
KW3-S281AWA	White	x=0.30, y=0.31			68.0	

Part Number	Emitting Color	λd (nm) / x, y	Face Color	Luminous Intensity Iv (mcd)		Circuit Common
				IF=mA	Typ.	

0.28" Triple Digit SMD Display

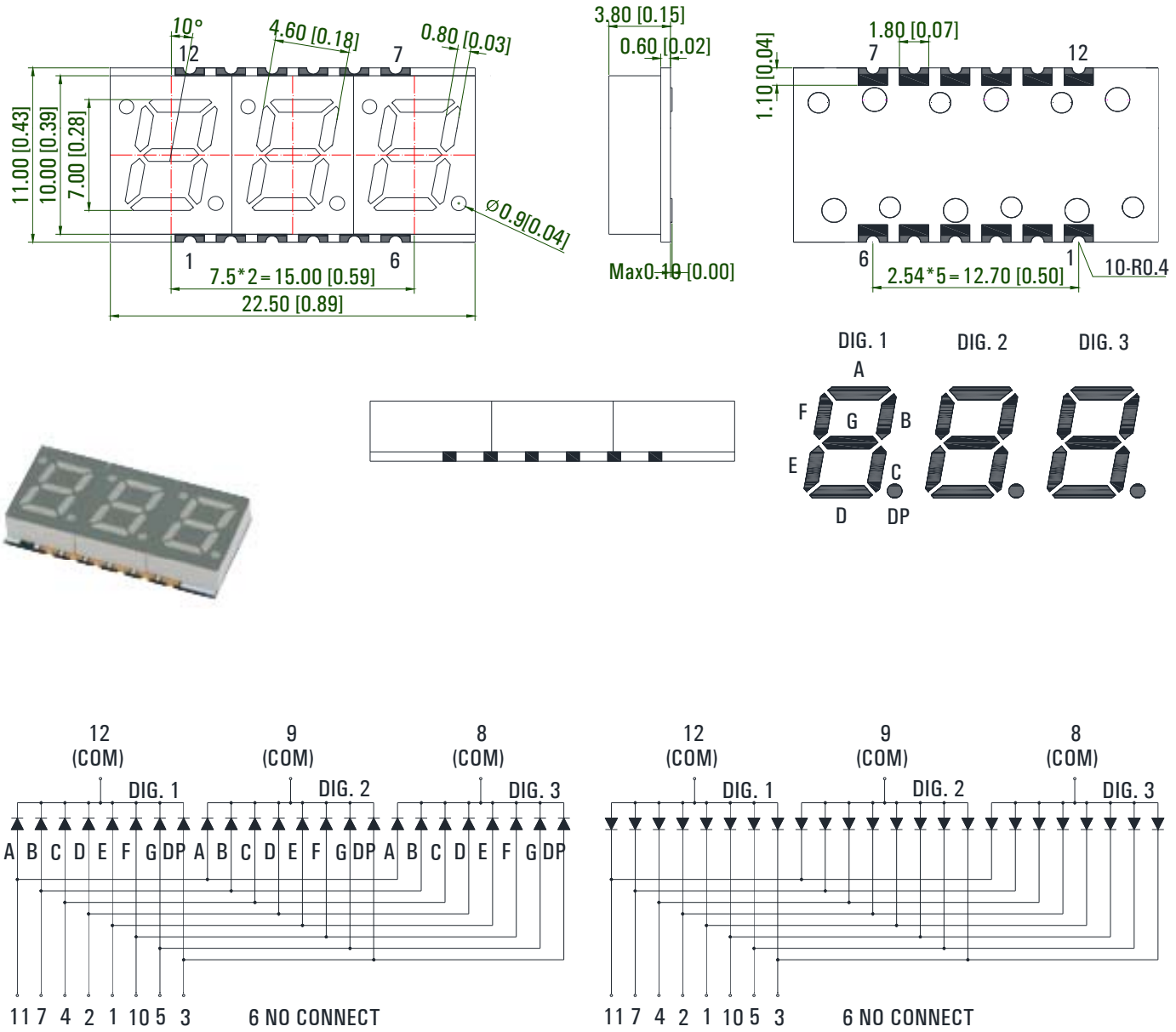

KW3-S282CRA	Deep Red	630	Gray	20	26.0	Common Cathode
KW3-S282CAA	Orange	605			34.0	
KW3-S282CGA	Yellow Green	572			14.0	
KW3-S282CGA-G5	Pure Green	525			55.0	
KW3-S282CBA	Blue	470			48.0	
KW3-S282CWA	White	x=0.30, y=0.31			68.0	
KW3-S282ARA	Deep Red	630			26.0	Common Anode
KW3-S282AAA	Orange	605			34.0	
KW3-S282AGA	Yellow Green	572			14.0	
KW3-S282AGA-G5	Pure Green	525			55.0	
KW3-S282ABA	Blue	470			48.0	
KW3-S282AWA	White	x=0.30, y=0.31			68.0	

Part Number	Emitting Color	λd (nm) / x, y	Face Color	Luminous Intensity Iv (mcd)		Circuit Common
				IF=mA	Typ.	

0.30" Triple Digit SMD Display

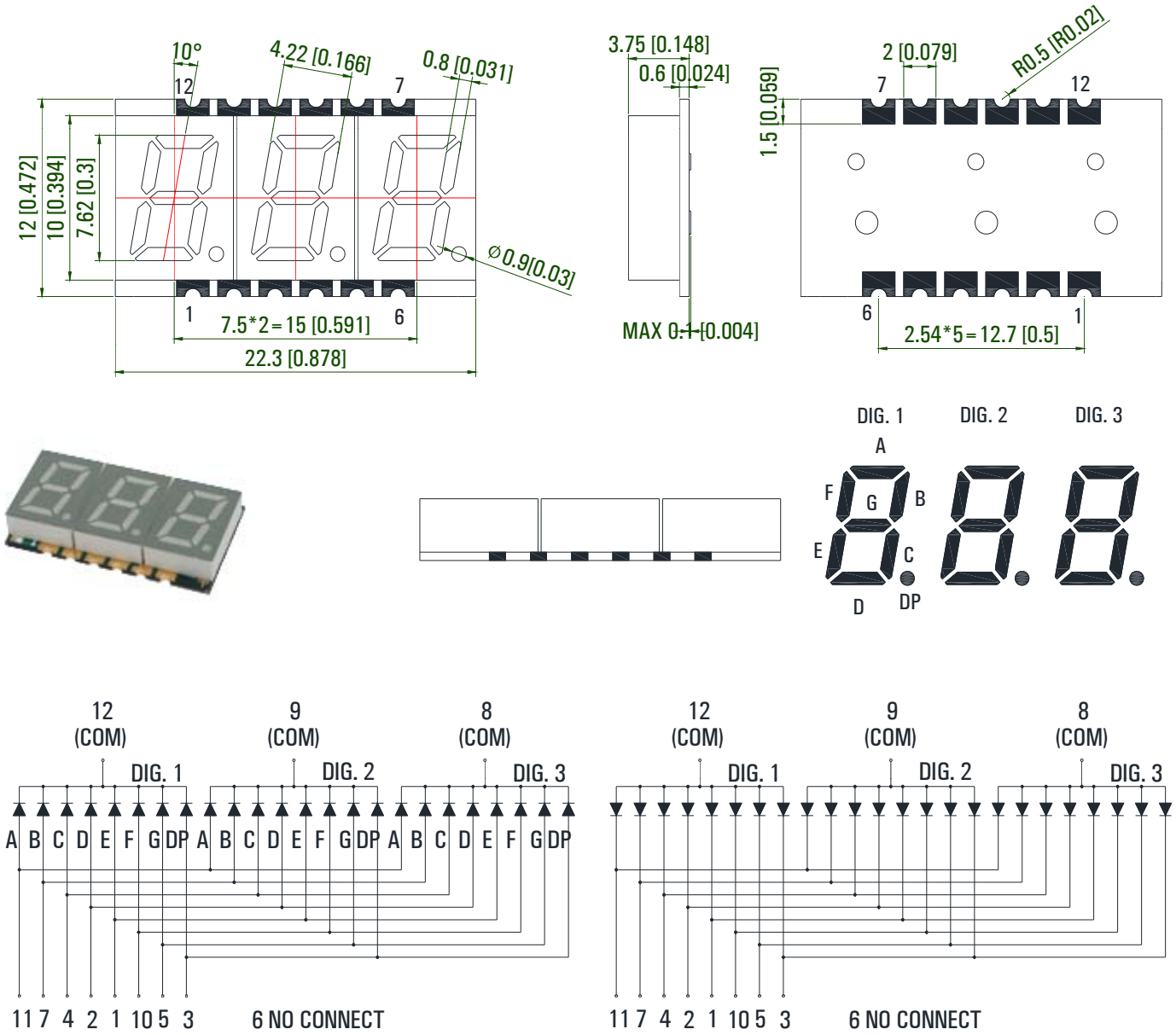

KW3-S302CRA	Deep Red	630	Gray	20	28.0	Common Cathode
KW3-S302CAA	Orange	605			36.0	
KW3-S302CGA	Yellow Green	572			16.0	
KW3-S302CGA-G5	Pure Green	525			60.0	
KW3-S302CBA	Blue	470			52.0	
KW3-S302CWA	White	x=0.30, y=0.31			70.0	
KW3-S302ARA	Deep Red	630			28.0	Common Anode
KW3-S302AAA	Orange	605			36.0	
KW3-S302AGA	Yellow Green	572			16.0	
KW3-S302AGA-G5	Pure Green	525			60.0	
KW3-S302ABA	Blue	470			52.0	
KW3-S302AWA	White	x=0.30, y=0.31			70.0	

Part Number	Emitting Color	λd (nm) / x, y	Face Color	Luminous Intensity Iv (mcd)		Circuit Common
				IF=mA	Typ.	

0.39" Triple Digit SMD Display

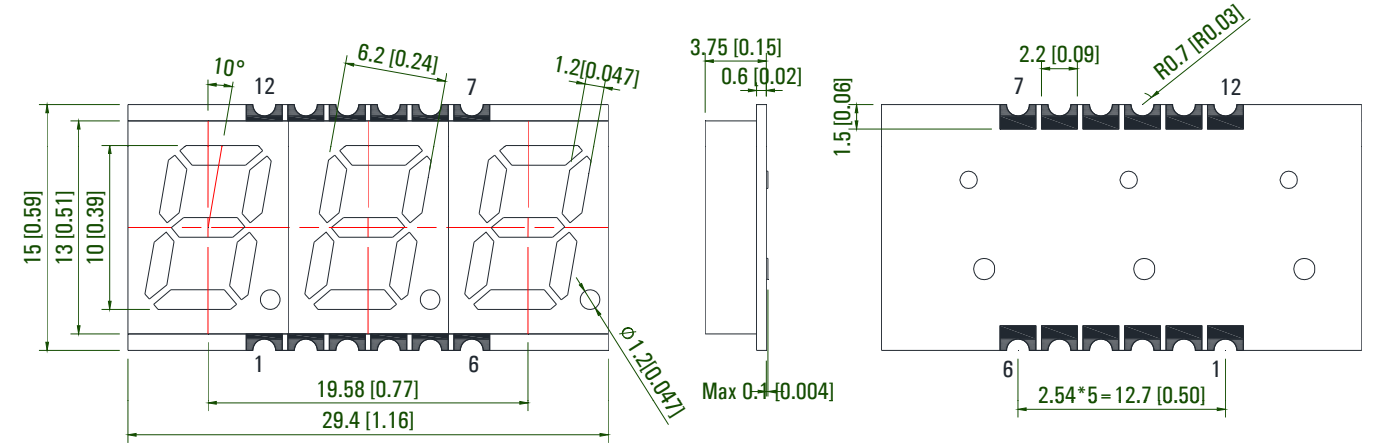

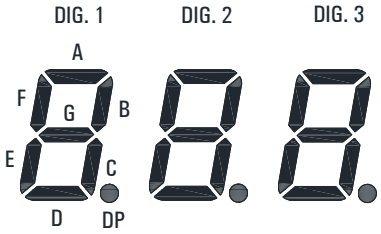

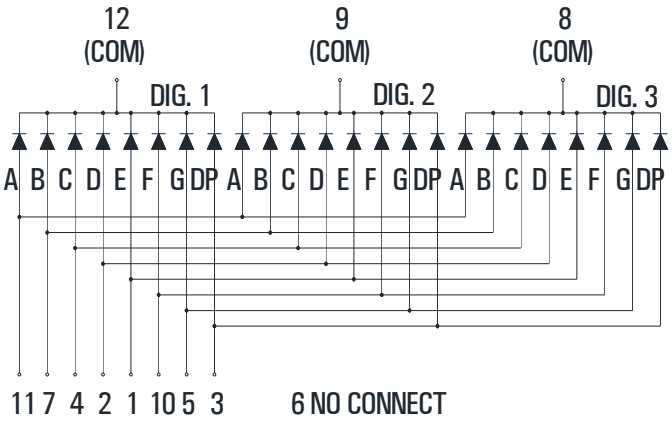

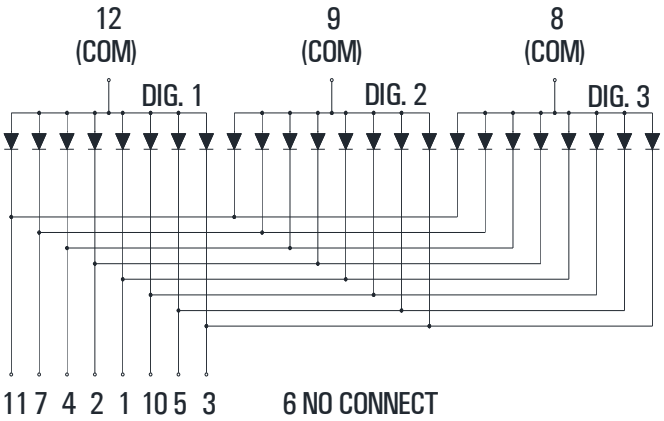

KW3-S391CRA	Deep Red	630	Gray	20	30.0	Common Cathode
KW3-S391CAA	Orange	605			38.0	
KW3-S391CGA	Yellow Green	572			18.0	
KW3-S391CGA-G5	Pure Green	525			66.0	
KW3-S391CBA	Blue	470			58.0	
KW3-S391CWA	White	x=0.30, y=0.31			72.0	
KW3-S391ARA	Deep Red	630			30.0	Common Anode
KW3-S391AAA	Orange	605			38.0	
KW3-S391AGA	Yellow Green	572			18.0	
KW3-S391AGA-G5	Pure Green	525			66.0	
KW3-S391ABA	Blue	470			58.0	
KW3-S391AWA	White	x=0.30, y=0.31			72.0	

Part Number	Emitting Color	λd (nm) / x, y	Face Color	Luminous Intensity Iv (mcd)		Circuit Common
				IF=mA	Typ.	

0.40" Triple Digit SMD Display

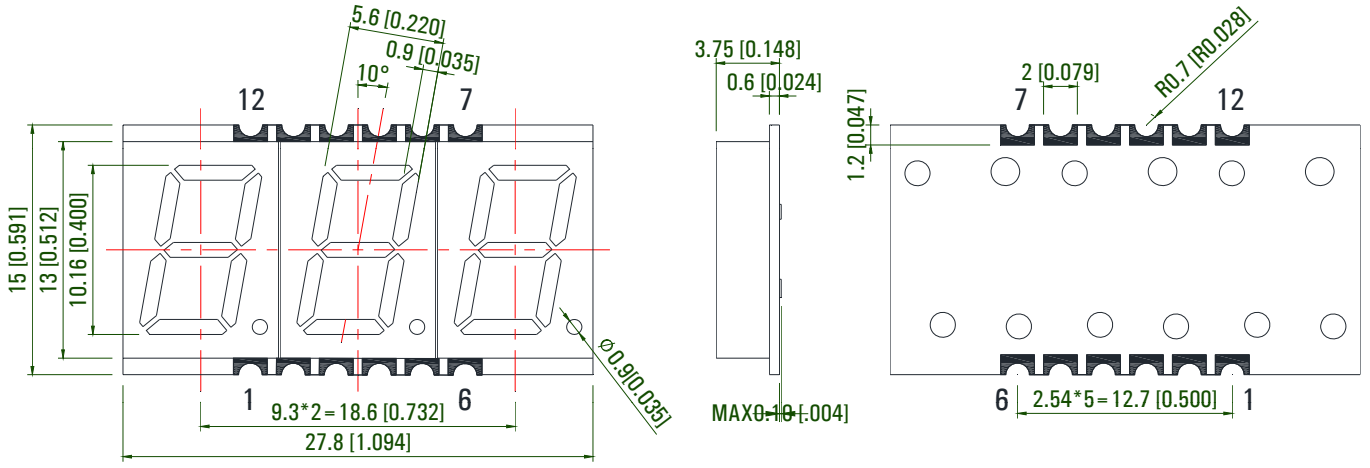

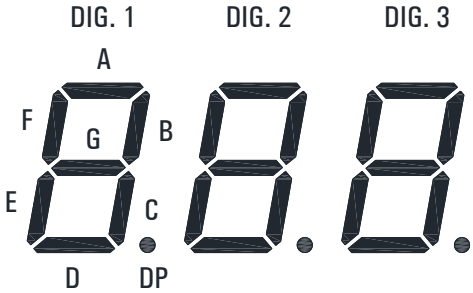

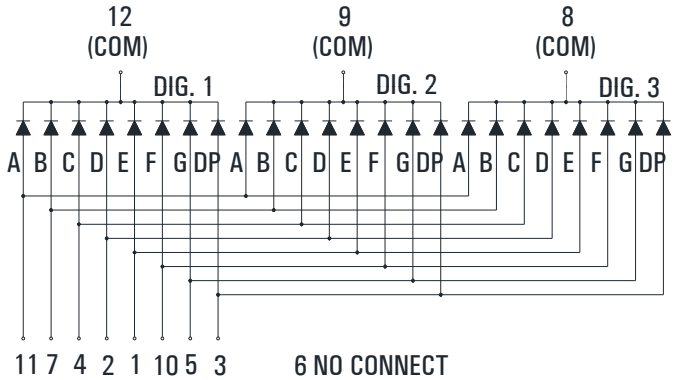

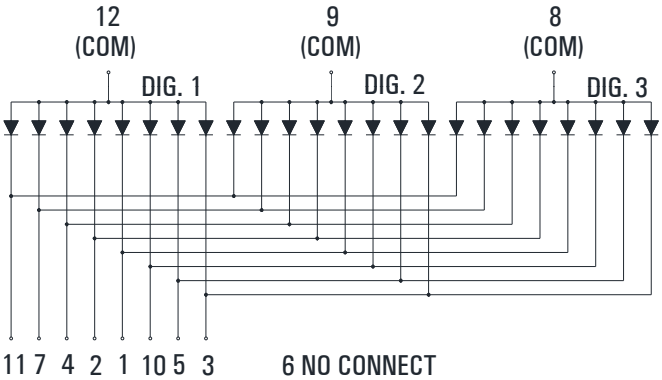

KW3-S401CRA	Deep Red	630	Gray	20	32.0	Common Cathode
KW3-S401CAA	Orange	605			40.0	
KW3-S401CGA	Yellow Green	572			20.0	
KW3-S401CGA-G5	Pure Green	525			68.0	
KW3-S401CBA	Blue	470			60.0	
KW3-S401CWA	White	x=0.30, y=0.31			74.0	
KW3-S401ARA	Deep Red	630			32.0	Common Anode
KW3-S401AAA	Orange	605			40.0	
KW3-S401AGA	Yellow Green	572			20.0	
KW3-S401AGA-G5	Pure Green	525			68.0	
KW3-S401ABA	Blue	470			60.0	
KW3-S401AWA	White	x=0.30, y=0.31			74.0	

Part Number	Emitting Color	λd (nm) / x, y	Face Color	Luminous Intensity Iv (mcd)		Circuit Common
				IF=mA	Typ.	

0.56" Triple Digit SMD Display

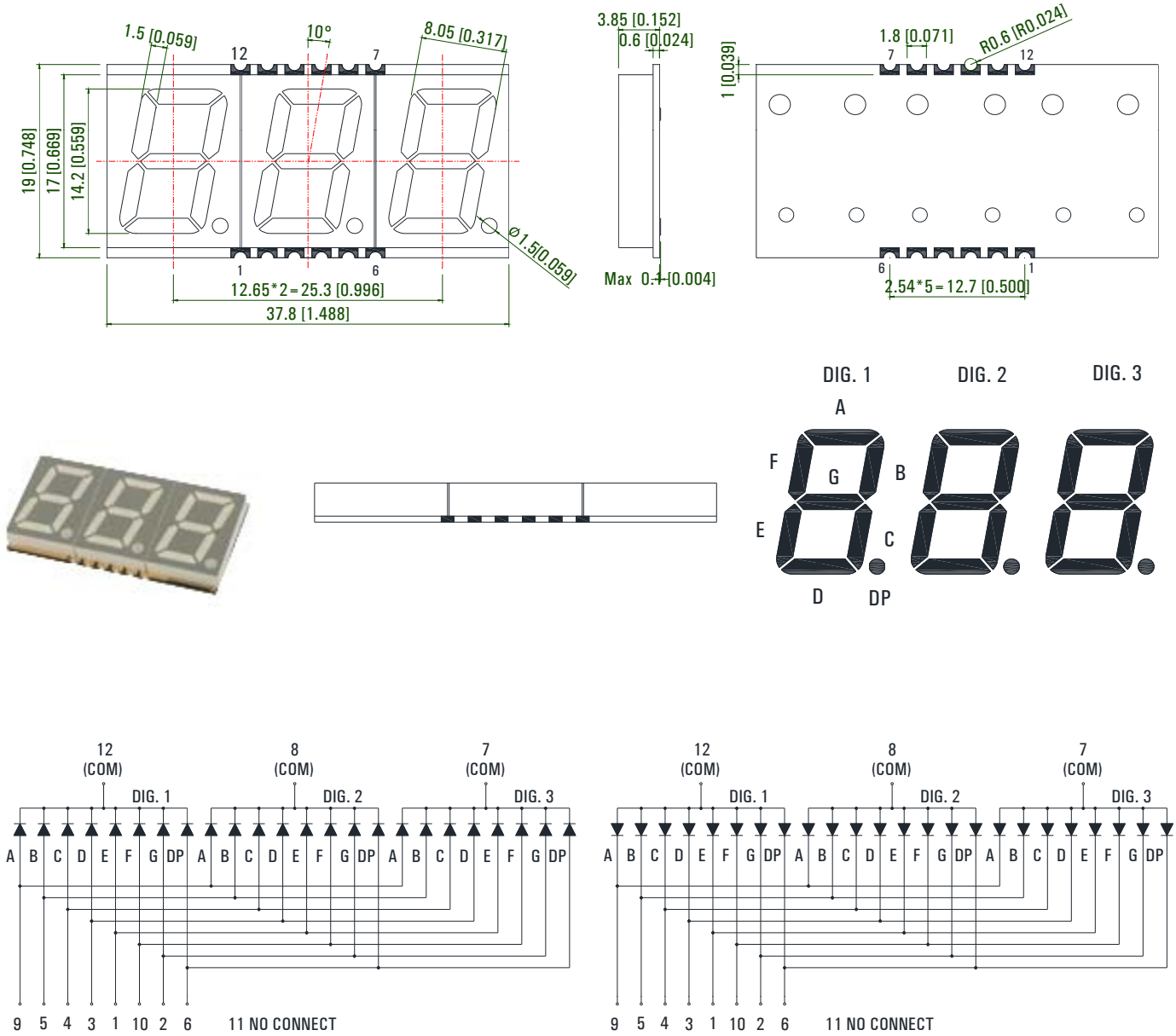

KW3-S563CRA	Deep Red	630	Gray	20	36.0	Common Cathode
KW3-S563CAA	Orange	605			44.0	
KW3-S563CGA	Yellow Green	572			24.0	
KW3-S563CGA-G5	Pure Green	525			72.0	
KW3-S563CBA	Blue	470			64.0	
KW3-S563CWA	White	x=0.30, y=0.31			78.0	
KW3-S563ARA	Deep Red	630			36.0	Common Anode
KW3-S563AAA	Orange	605			44.0	
KW3-S563AGA	Yellow Green	572			24.0	
KW3-S563AGA-G5	Pure Green	525			72.0	
KW3-S563ABA	Blue	470			64.0	
KW3-S563AWA	White	x=0.30, y=0.31			78.0	

Part Number	Emitting Color	λd (nm) / x, y	Face Color	Luminous Intensity Iv (mcd)		Circuit Common
				IF=mA	Typ.	

0.20" Quadruple Digit SMD Display

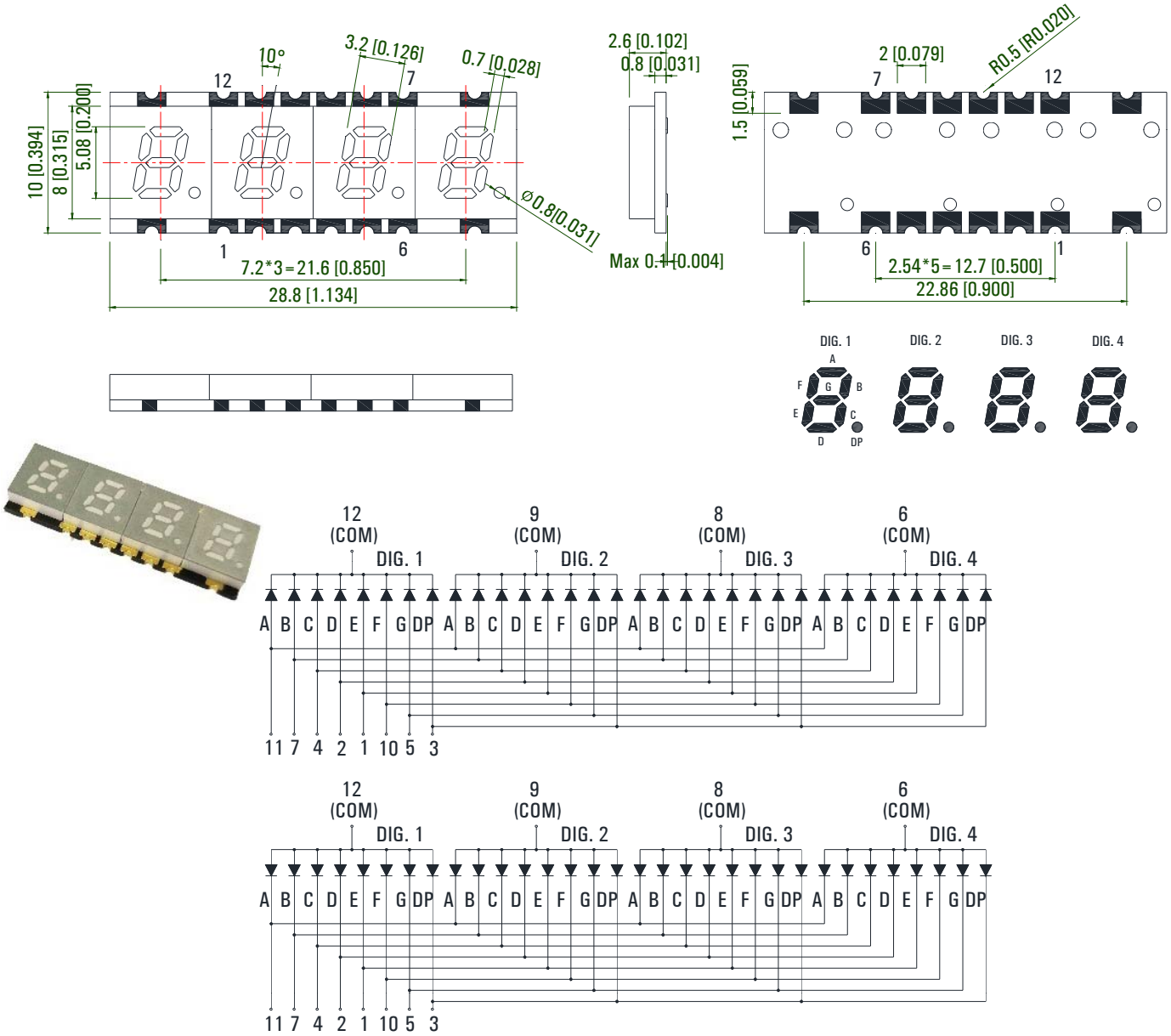

KW4-S202CRA	Deep Red	630	Gray	20	20.0	Common Cathode
KW4-S202CAA	Orange	605			32.0	
KW4-S202CGA	Yellow Green	572			10.0	
KW4-S202CGA-G5	Pure Green	525			50.0	
KW4-S202CBA	Blue	470			35.0	
KW4-S202ARA	Deep Red	630			20.0	Common Anode
KW4-S202AAA	Orange	605			32.0	
KW4-S202AGA	Yellow Green	572			10.0	
KW4-S202AGA-G5	Pure Green	525			50.0	
KW4-S202ABA	Blue	470			35.0	

Part Number	Emitting Color	λd (nm) / x, y	Face Color	Luminous Intensity Iv (mcd)		Circuit Common
				IF=mA	Typ.	

0.28" Quadruple Digit SMD Display

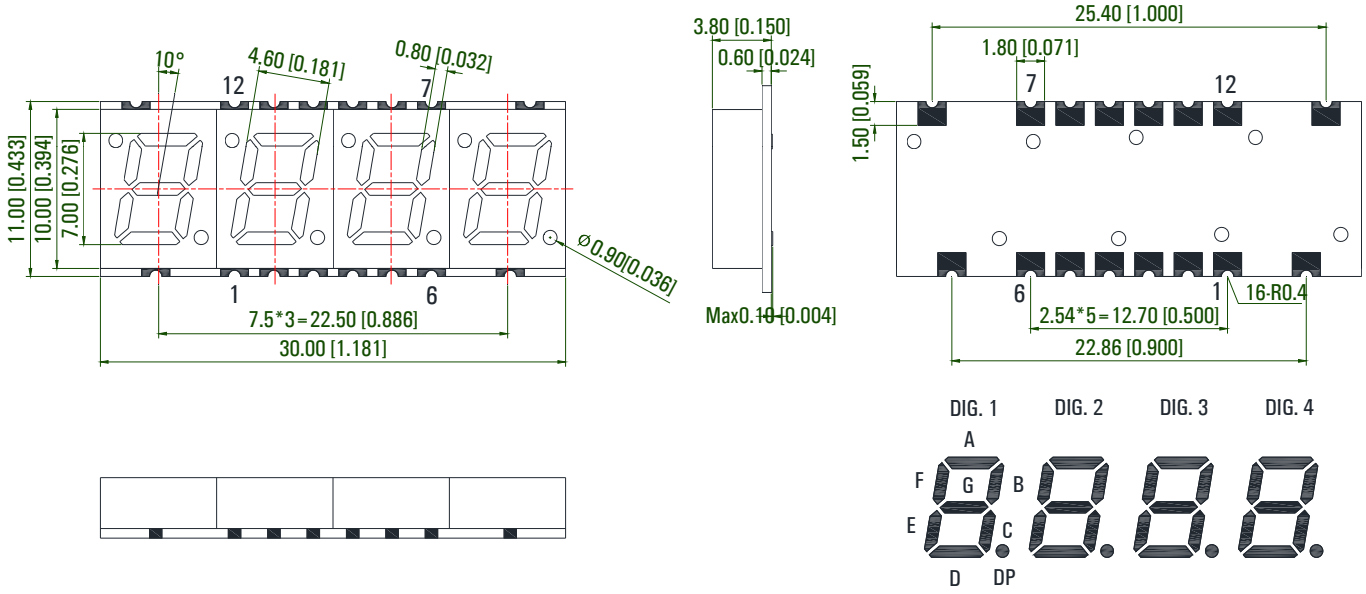

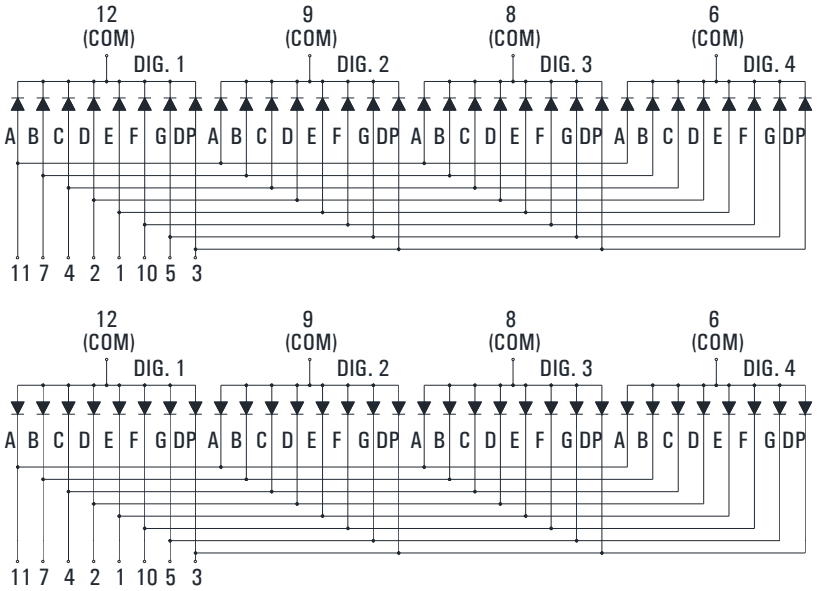

KW4-S281CRA	Deep Red	630	Gray	20	26.0	Common Cathode
KW4-S281CAA	Orange	605			34.0	
KW4-S281CGA	Yellow Green	572			14.0	
KW4-S281CGA-G5	Pure Green	525			56.0	
KW4-S281CBA	Blue	470			48.0	
KW4-S281CWA	White	x=0.30, y=0.31			68.0	
KW4-S281ARA	Deep Red	630			26.0	Common Anode
KW4-S281AAA	Orange	605			34.0	
KW4-S281AGA	Yellow Green	572			14.0	
KW4-S281AGA-G5	Pure Green	525			56.0	
KW4-S281ABA	Blue	470			48.0	
KW4-S281AWA	White	x=0.30, y=0.31			68.0	

Part Number	Emitting Color	λd (nm) / x, y	Face Color	Luminous Intensity Iv (mcd)		Circuit Common
				IF=mA	Typ.	

0.30" Quadruple Digit SMD Display

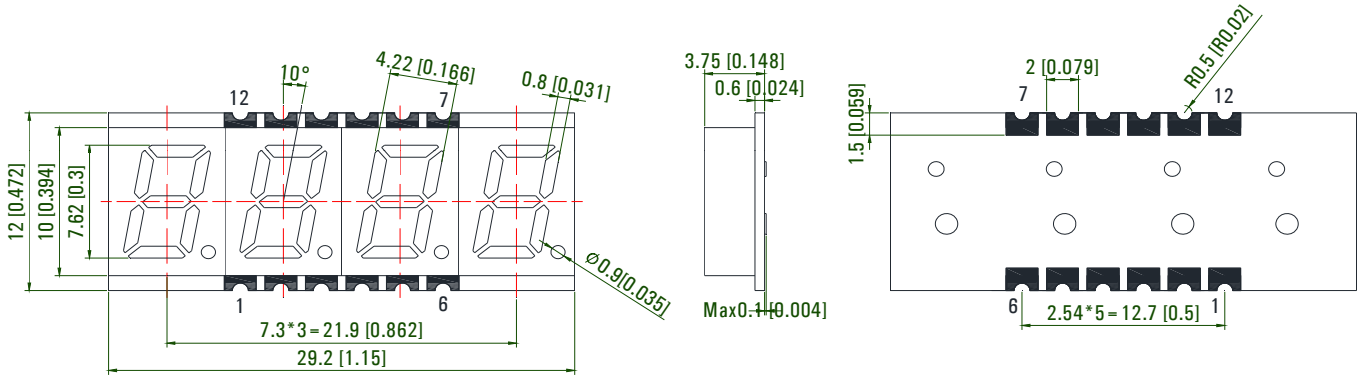

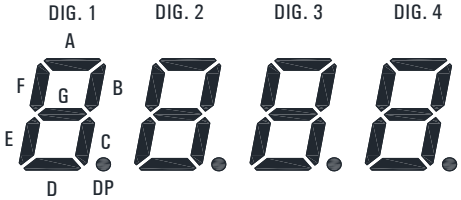

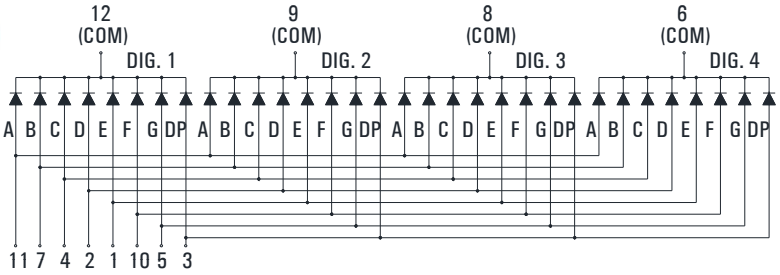

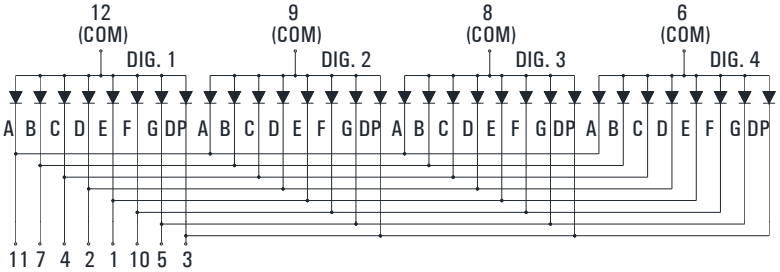

KW4-S301CRA	Deep Red	630	Gray	20	28.0	Common Cathode
KW4-S301CAA	Orange	605			36.0	
KW4-S301CGA	Yellow Green	572			16.0	
KW4-S301CGA-G5	Pure Green	525			60.0	
KW4-S301CBA	Blue	470			52.0	
KW4-S301CWA	White	x=0.30, y=0.31			70.0	
KW4-S301ARA	Deep Red	630			28.0	Common Anode
KW4-S301AAA	Orange	605			36.0	
KW4-S301AGA	Yellow Green	572			16.0	
KW4-S301AGA-G5	Pure Green	525			60.0	
KW4-S301ABA	Blue	470			52.0	
KW4-S301AWA	White	x=0.30, y=0.31			70.0	

Part Number	Emitting Color	λd (nm) / x, y	Face Color	Luminous Intensity Iv (mcd)		Circuit Common
				IF=mA	Typ.	

0.39" Quadruple Digit SMD Display

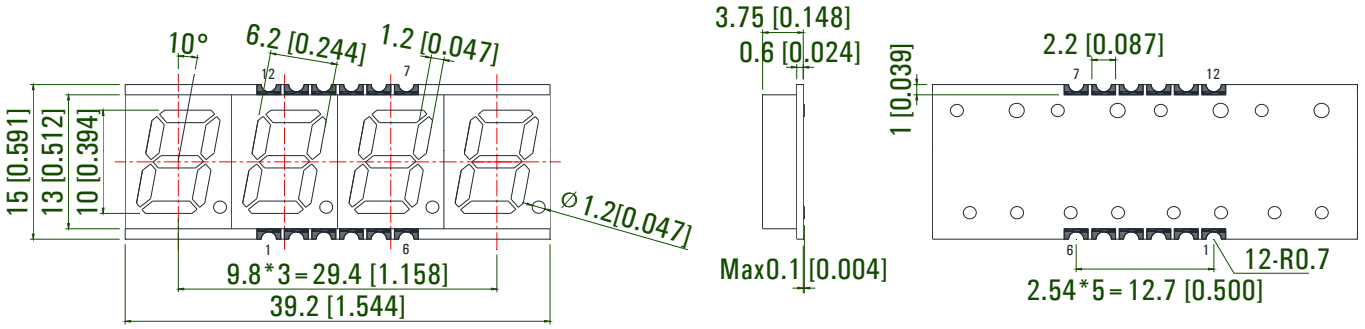

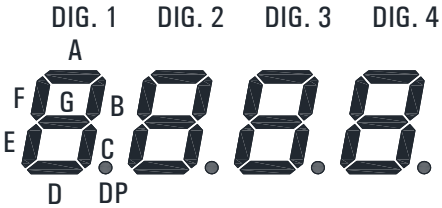

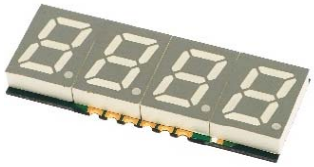

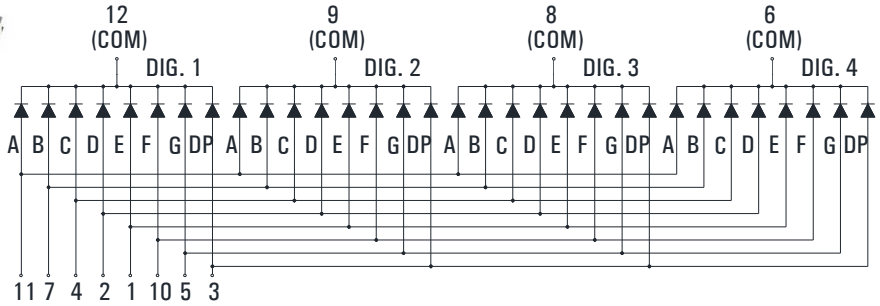

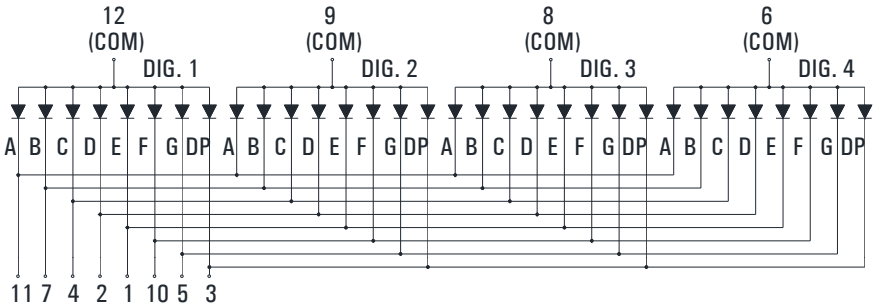

KW4-S391CRA	Deep Red	630	Gray	20	30.0	Common Cathode
KW4-S391CAA	Orange	605			38.0	
KW4-S391CGA	Yellow Green	572			18.0	
KW4-S391CGA-G5	Pure Green	525			66.0	
KW4-S391CBA	Blue	470			58.0	
KW4-S391CWA	White	x=0.30, y=0.31			72.0	
KW4-S391ARA	Deep Red	630			30.0	Common Anode
KW4-S391AAA	Orange	605			38.0	
KW4-S391AGA	Yellow Green	572			18.0	
KW4-S391AGA-G5	Pure Green	525			66.0	
KW4-S391ABA	Blue	470			58.0	
KW4-S391AWA	White	x=0.30, y=0.31			72.0	

Part Number	Emitting Color	λd (nm) / x, y	Face Color	Luminous Intensity Iv (mcd)		Circuit Common
				IF=mA	Typ.	

0.47" Quadruple Digit SMD Display

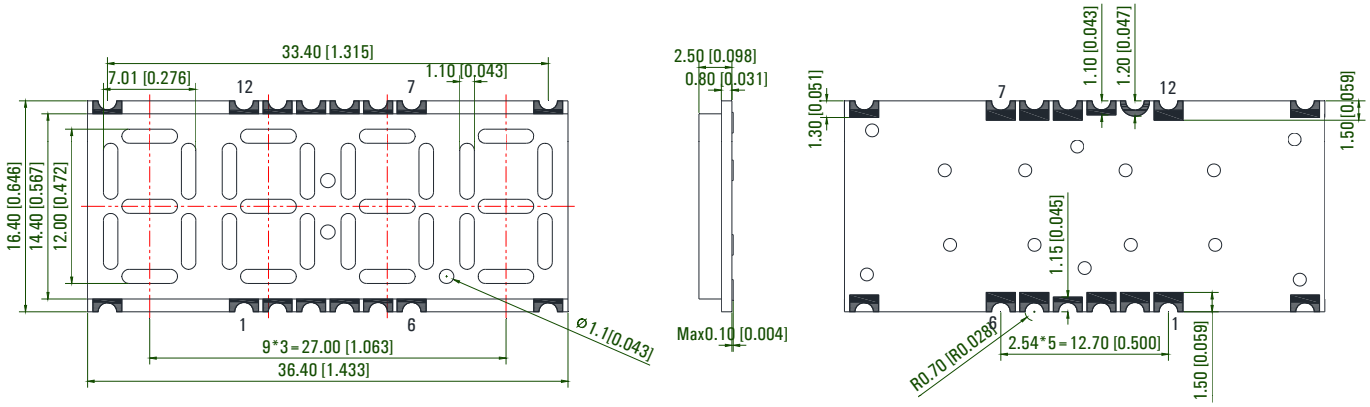

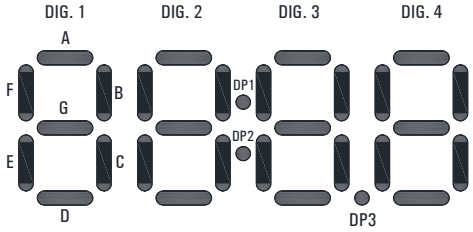

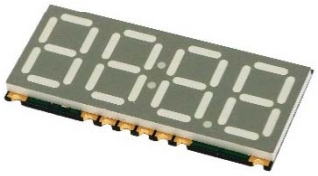

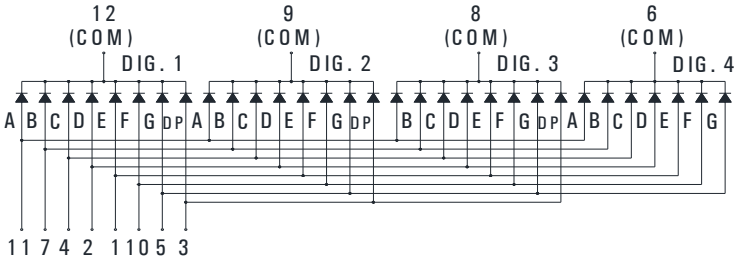

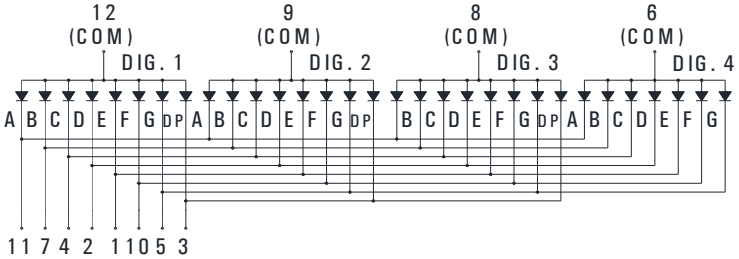

KW4-S471CRA	Deep Red	630	Gray	20	32.0	Common Cathode
KW4-S471CAA	Orange	605			40.0	
KW4-S471CGA	Yellow Green	572			20.0	
KW4-S471CGA-G5	Pure Green	525			68.0	
KW4-S471CBA	Blue	470			60.0	
KW4-S471CWA	White	x=0.30, y=0.31			74.0	
KW4-S471ARA	Deep Red	630			32.0	Common Anode
KW4-S471AAA	Orange	605			40.0	
KW4-S471AGA	Yellow Green	572			20.0	
KW4-S471AGA-G5	Pure Green	525			68.0	
KW4-S471ABA	Blue	470			60.0	
KW4-S471AWA	White	x=0.30, y=0.31			74.0	

Part Number	Emitting Color	λd (nm) / x, y	Face Color	Luminous Intensity Iv (mcd)		Circuit Common
				IF=mA	Typ.	

0.56" Quadruple Digit SMD Display

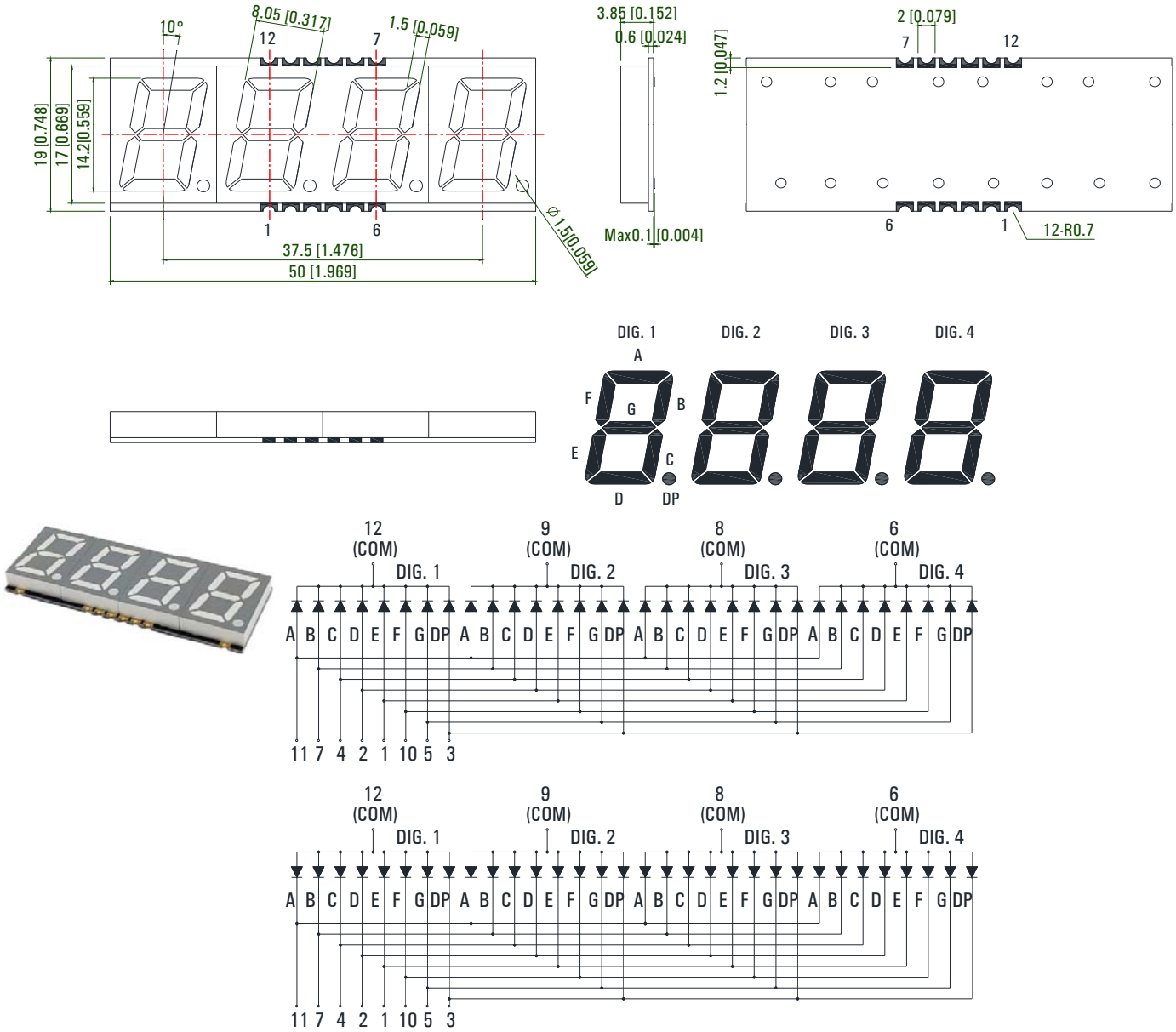

KW4-S563CRA	Deep Red	630	Gray	20	36.0	Common Cathode
KW4-S563CAA	Orange	605			44.0	
KW4-S563CGA	Yellow Green	572			24.0	
KW4-S563CGA-G5	Pure Green	525			72.0	
KW4-S563CBA	Blue	470			64.0	
KW4-S563CWA	White	x=0.30, y=0.31			78.0	
KW4-S563ARA	Deep Red	630			36.0	Common Anode
KW4-S563AAA	Orange	605			44.0	
KW4-S563AGA	Yellow Green	572			24.0	
KW4-S563AGA-G5	Pure Green	525			72.0	
KW4-S563ABA	Blue	470			64.0	
KW4-S563AWA	White	x=0.30, y=0.31			78.0	

Part Number	Emitting Color	λd (nm) / x, y	Face Color	Luminous Intensity Iv (mcd)		Circuit Common
				IF=mA	Typ.	

0.40" Single Digit Alphanumeric SMD Display

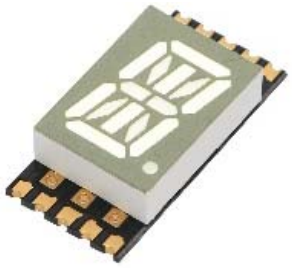

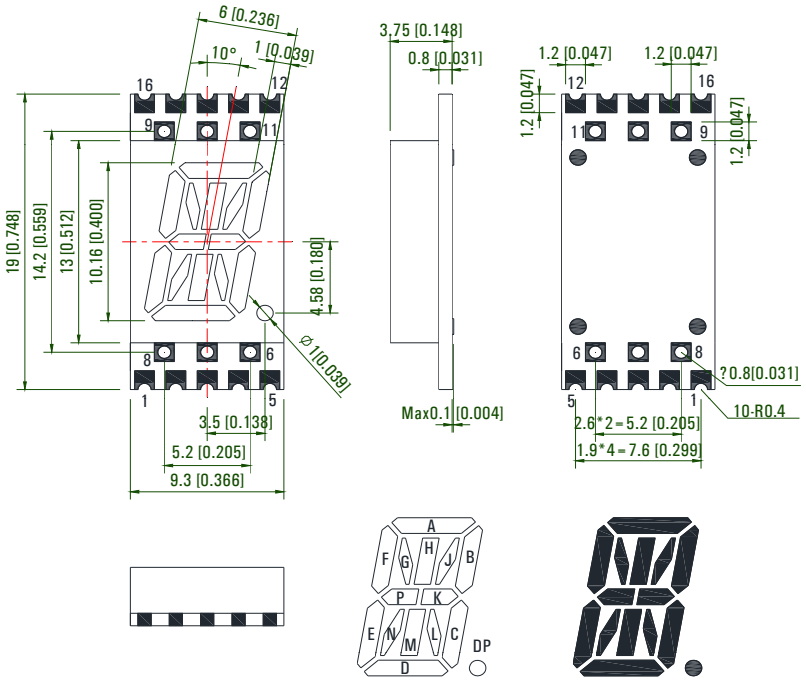

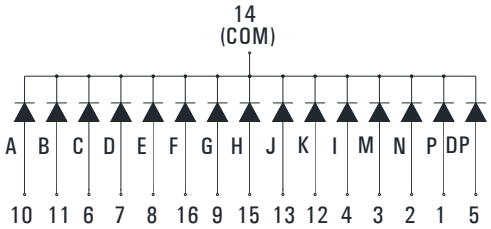

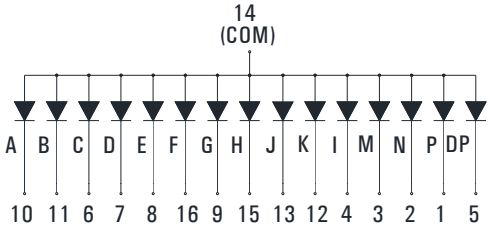

KWA-S401CRA	Deep Red	630	Gray	20	32.0	Common Cathode
KWA-S401CAA	Orange	605			38.0	
KWA-S401CGA	Yellow Green	572			20.0	
KWA-S401CGA-G5	Pure Green	525			60.0	
KWA-S401CBA	Blue	470			42.0	
KWA-S401CWA	White	x=0.30, y=0.31			74.0	
KWA-S401ARA	Deep Red	630			32.0	Common Anode
KWA-S401AAA	Orange	605			38.0	
KWA-S401AGA	Yellow Green	572			20.0	
KWA-S401AGA-G5	Pure Green	525			60.0	
KWA-S401ABA	Blue	470			42.0	
KWA-S401AWA	White	x=0.30, y=0.31			74.0	

Part Number	Emitting Color	λd (nm) / x, y	Face Color	Luminous Intensity Iv (mcd)		Circuit Common
				IF=mA	Typ.	

0.40" Dual Digit Alphanumeric SMD Display

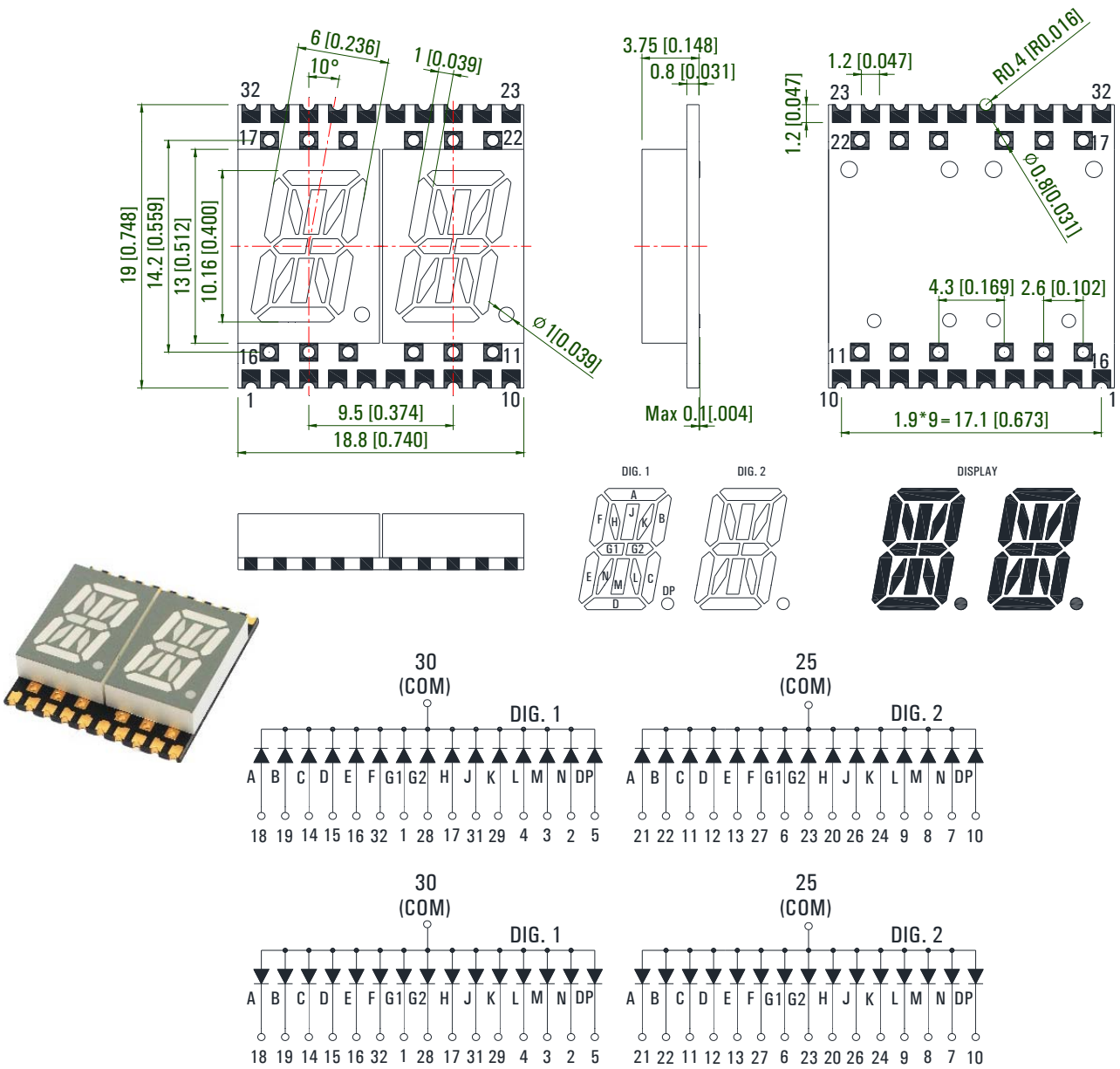

KWA2-S401CRA	Deep Red	630	Gray	20	32.0	Common Cathode
KWA2-S401CAA	Orange	605			38.0	
KWA2-S401CGA	Yellow Green	572			20.0	
KWA2-S401CGA-G5	Pure Green	525			60.0	
KWA2-S401CBA	Blue	470			42.0	
KWA2-S401CWA	White	x=0.30, y=0.31			74.0	
KWA2-S401ARA	Deep Red	630			32.0	Common Anode
KWA2-S401AAA	Orange	605			38.0	
KWA2-S401AGA	Yellow Green	572			20.0	
KWA2-S401AGA-G5	Pure Green	525			60.0	
KWA2-S401ABA	Blue	470			42.0	
KWA2-S401AWA	White	x=0.30, y=0.31			74.0	

Part Number	Emitting Color	λd (nm) / x, y	Face Color	Luminous Intensity Iv (mcd)		Circuit Common
				IF=mA	Typ.	

0.40" Triple Digit Alphanumeric SMD Display

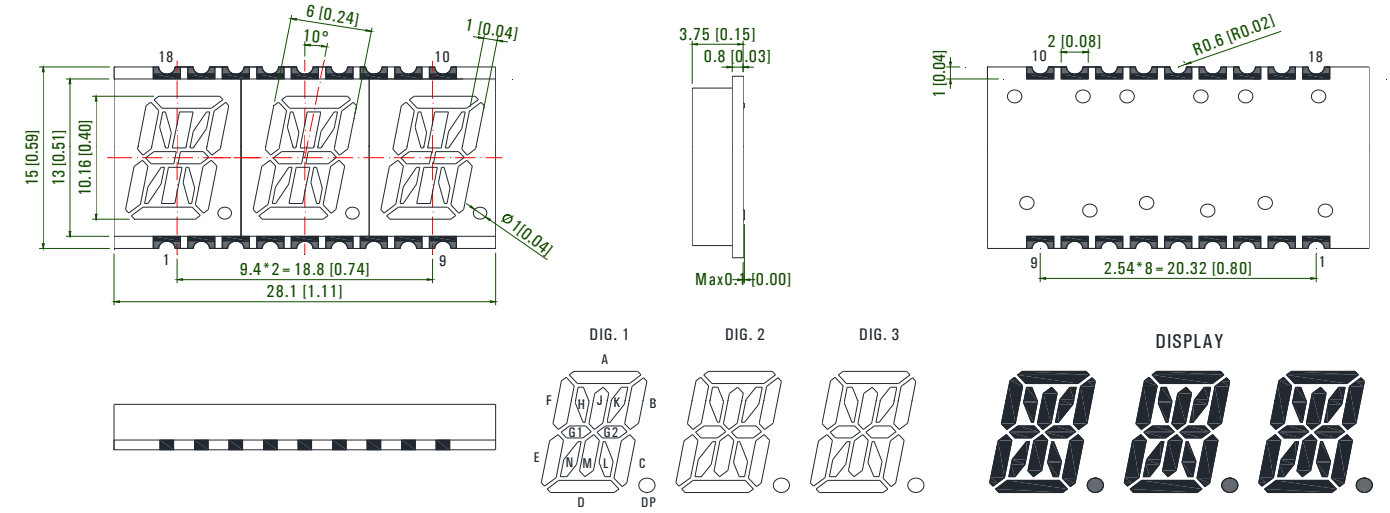

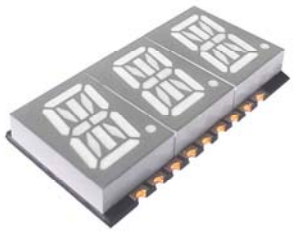

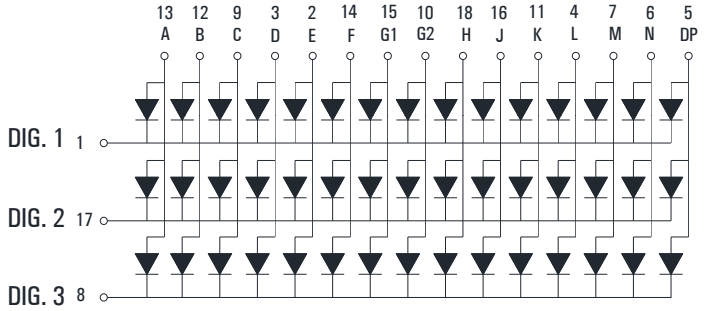

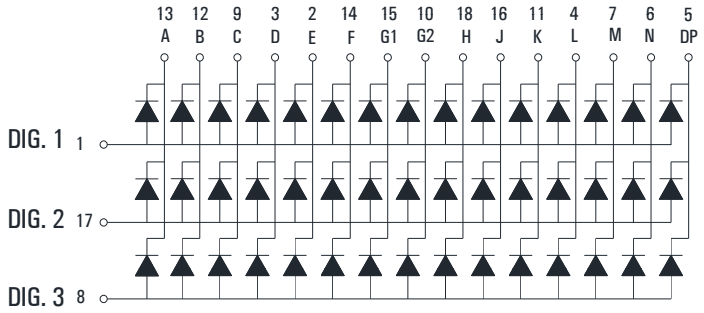

KWA3-S401CRA	Deep Red	630	Gray	20	32.0	Common Cathode
KWA3-S401CAA	Orange	605			38.0	
KWA3-S401CGA	Yellow Green	572			20.0	
KWA3-S401CGA-G5	Pure Green	525			60.0	
KWA3-S401CBA	Blue	470			42.0	
KWA3-S401CWA	White	x=0.30, y=0.31			74.0	
KWA3-S401ARA	Deep Red	630			32.0	Common Anode
KWA3-S401AAA	Orange	605			38.0	
KWA3-S401AGA	Yellow Green	572			20.0	
KWA3-S401AGA-G5	Pure Green	525			60.0	
KWA3-S401ABA	Blue	470			42.0	
KWA3-S401AWA	White	x=0.30, y=0.31			74.0	

Part Number	Emitting Color	λd (nm) / x, y	Face Color	Luminous Intensity Iv (mcd)		Circuit Common
				IF=mA	Typ.	

0.39" Quadruple Digit Alphanumeric SMD Display

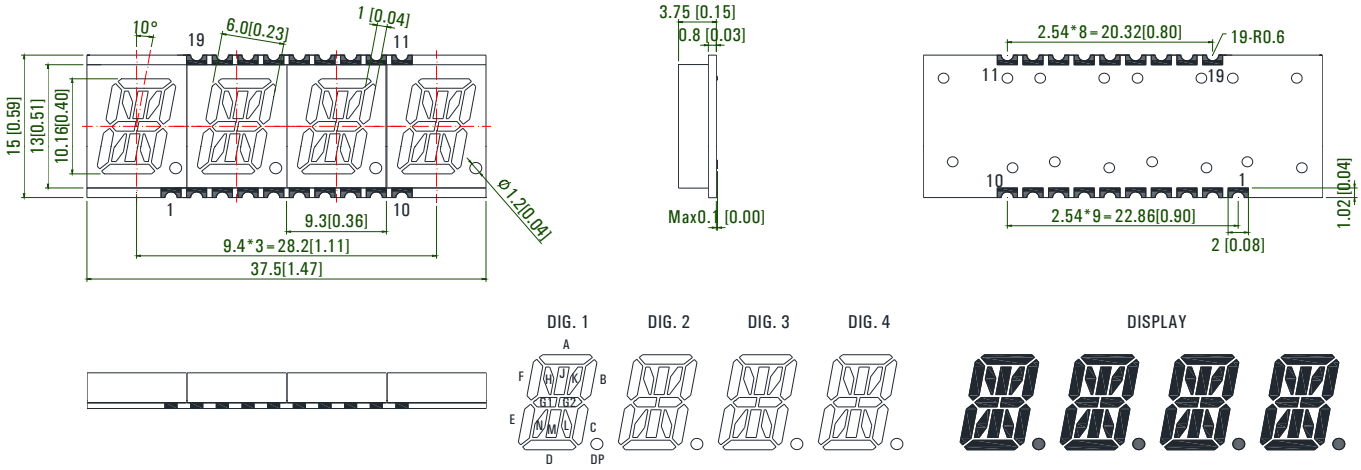

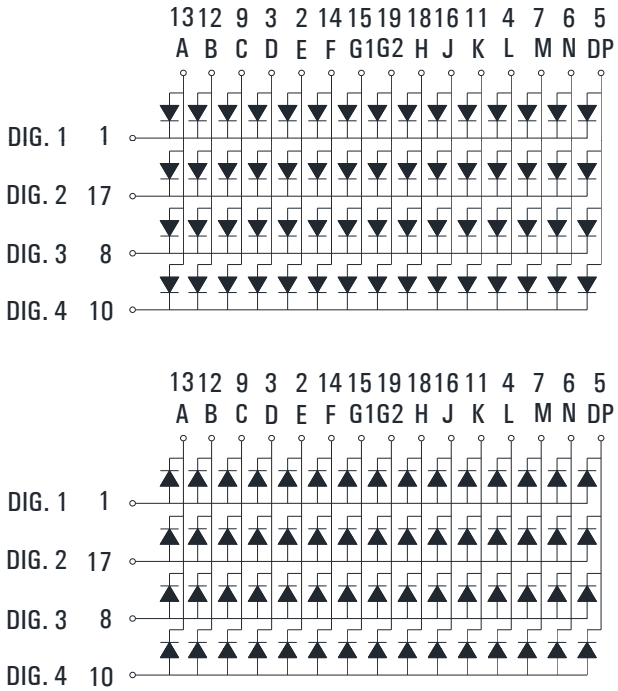

KWA4-S392CRA	Deep Red	630	Gray	20	32.0	Common Cathode
KWA4-S392CAA	Orange	605			38.0	
KWA4-S392CGA	Yellow Green	572			20.0	
KWA4-S392CGA-G5	Pure Green	525			60.0	
KWA4-S392CBA	Blue	470			42.0	
KWA4-S392CWA	White	x=0.30, y=0.31			74.0	
KWA4-S392ARA	Deep Red	630			32.0	Common Anode
KWA4-S392AAA	Orange	605			38.0	
KWA4-S392AGA	Yellow Green	572			20.0	
KWA4-S392AGA-G5	Pure Green	525			60.0	
KWA4-S392ABA	Blue	470			42.0	
KWA4-S392AWA	White	x=0.30, y=0.31			74.0	

Part Number	Emitting Color	λd (nm) / x, y	Face Color	Luminous Intensity Iv (mcd)		Circuit Common
				IF=mA	Typ.	

0.8" 8×8 Dot Matrix SMD Display

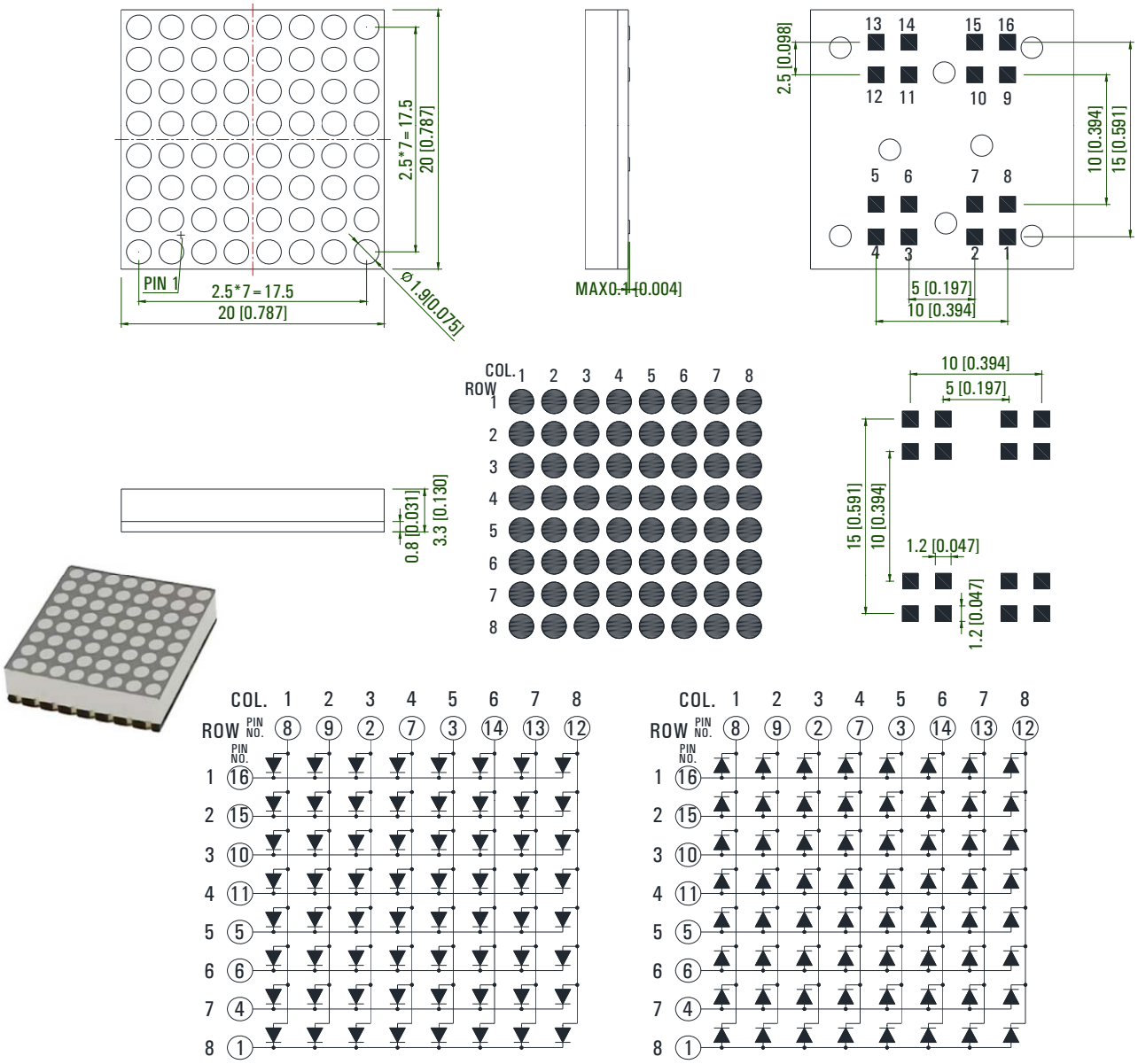

KWM-S20881CRA	Deep Red	630	Gray	20	26.0	Common Cathode
KWM-S20881CAA	Orange	605			35.0	
KWM-S20881CGA	Yellow Green	572			17.0	
KWM-S20881CGA-G5	Pure Green	525			56.0	
KWM-S20881CBA	Blue	470			42.0	
KWM-S20881CWA	White	x=0.30, y=0.31			84.0	
KWM-S20881ARA	Deep Red	630			26.0	Common Anode
KWM-S20881AAA	Orange	605			35.0	
KWM-S20881AGA	Yellow Green	572			17.0	
KWM-S20881AGA-G5	Pure Green	525			56.0	
KWM-S20881ABA	Blue	470			42.0	
KWM-S20881AWA	White	x=0.30, y=0.31			84.0	

Part Number	Emitting Color	λd (nm) / x, y	Face Color	Luminous Intensity Iv (mcd)		Circuit Common
				IF=mA	Typ.	

10 Segment Single Color Light Bar SMD Display

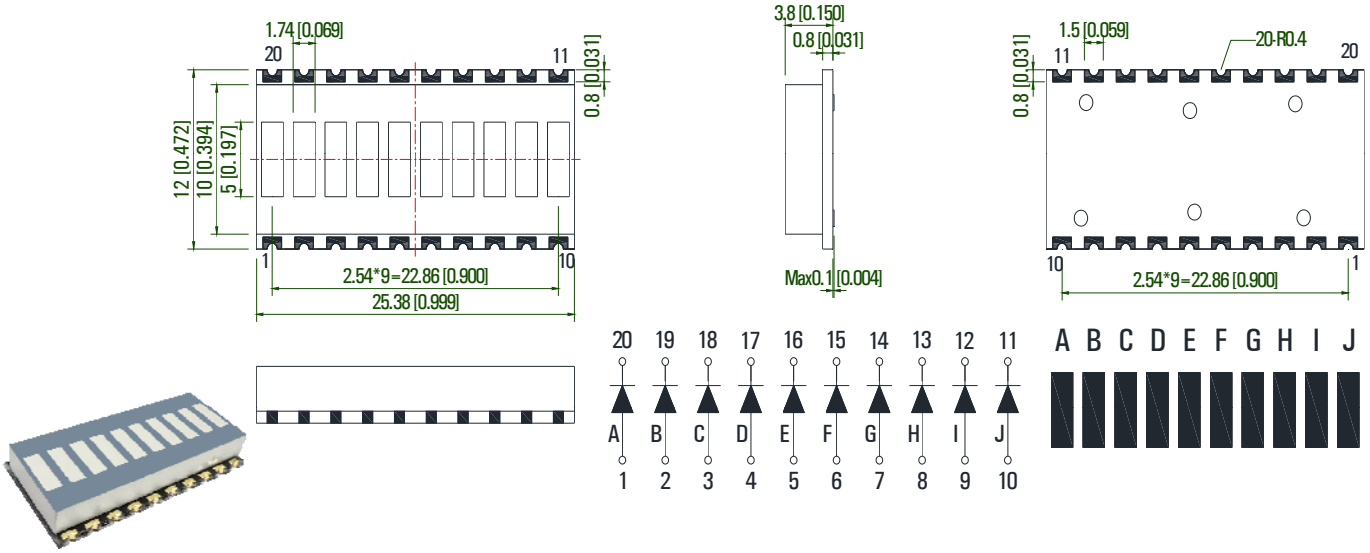

KWL-SR1025RA	Deep Red	630	Gray	20	26.0	---
KWL-SR1025AA	Orange	605			35.0	
KWL-SR1025GA	Yellow Green	572			17.0	
KWL-SR1025GA-G5	Pure Green	525			56.0	
KWL-SR1025BA	Blue	470			42.0	
KWL-SR1025WA	White	x=0.30, y=0.31			84.0	

10 Segment Bi-color Light Bar SMD Display

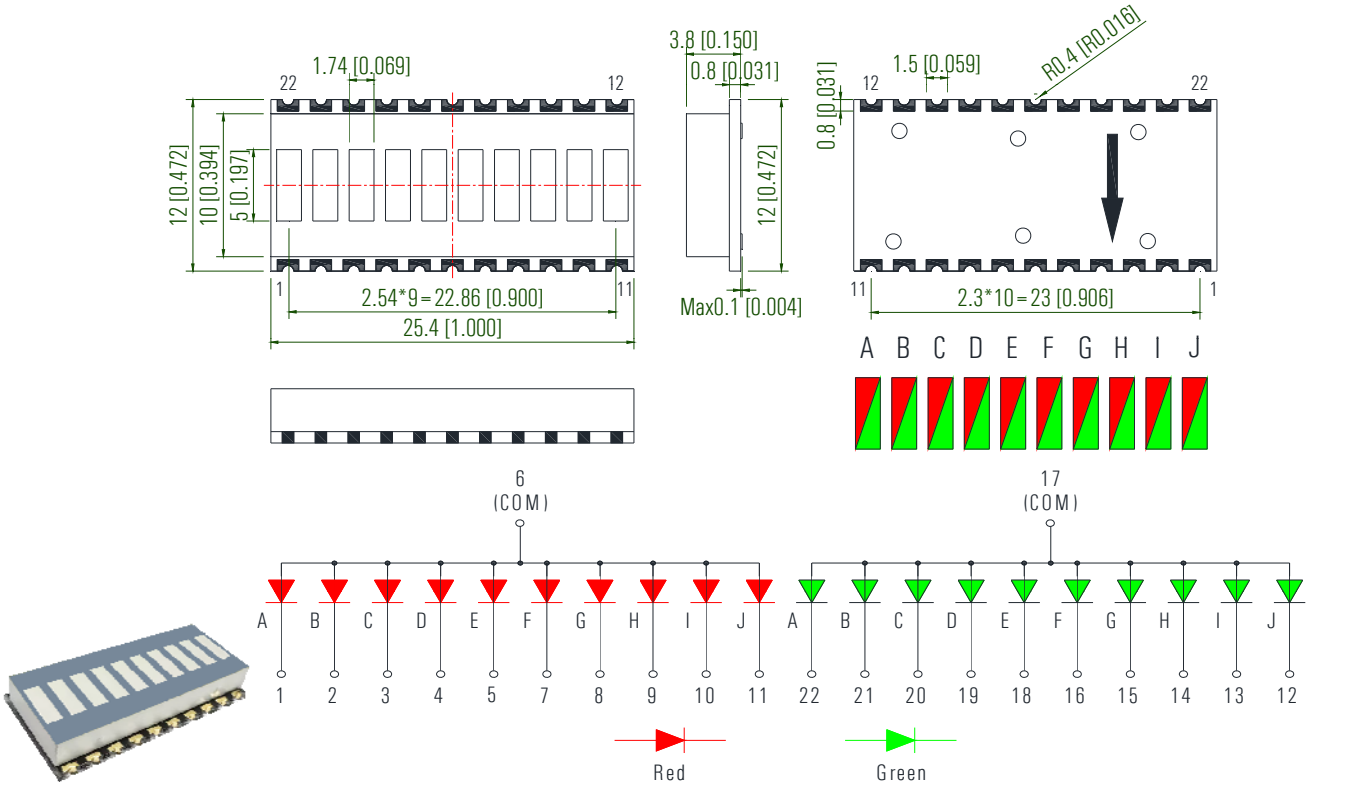

KWL-SR10251ARGA	Deep Red	630	Gray	20	26.0	Common Anode
	Pure Green	525			56.0	

1. All dimensions are in millimeters (inches).
2. Tolerance is ±0.25mm (.010") unless otherwise noted.
3. Specifications are subject to change without notice.

Part Number	Chip Material	Emitting Color	λp (nm) / x	λd (nm) / y	Lens Color	VF (V)		Power (mW/Sr)			Viewing Angle
						Typ.	Max.	IF=mA	Min.	Typ.	2θ ½

3mm Round Standard Infrared Devices, T-1

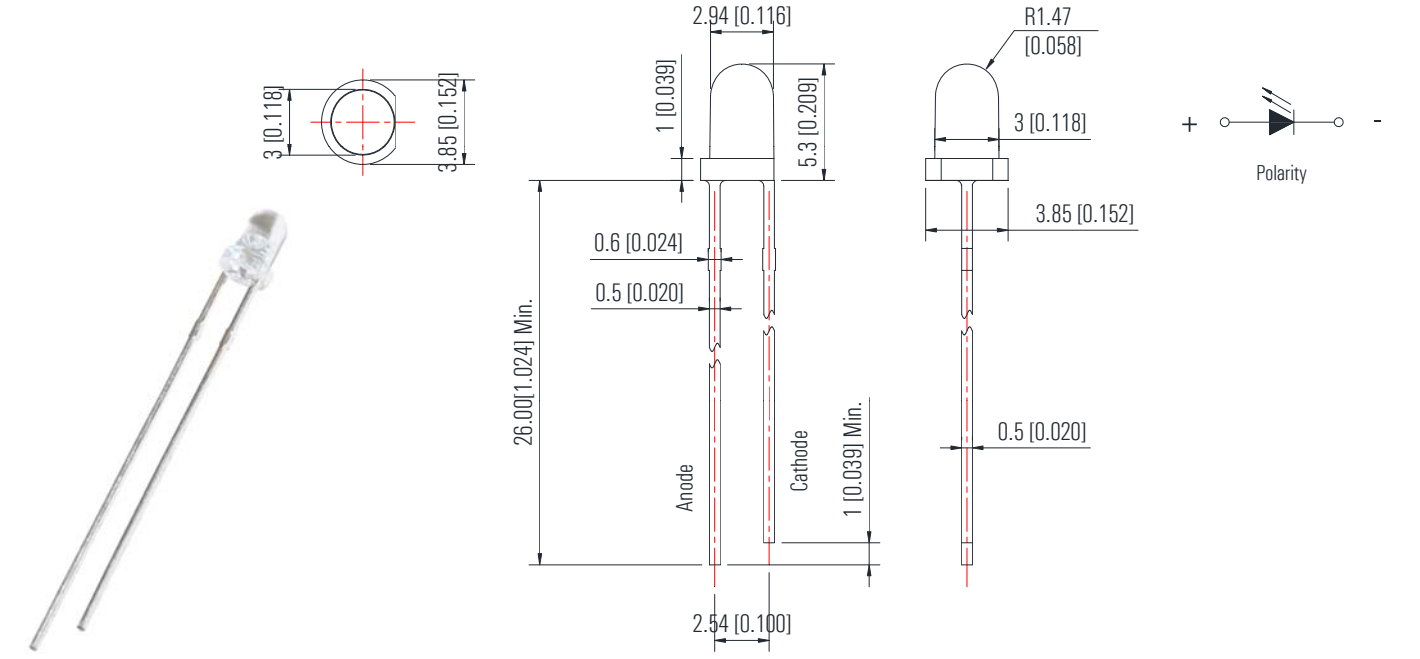

304IRC2E-5AC	AlGaAs/GaAs	Infrared	940	---	Water Clear	1.20	1.50	20	6.0	12.0	15

3mm Round Standard Infrared Devices, T-1

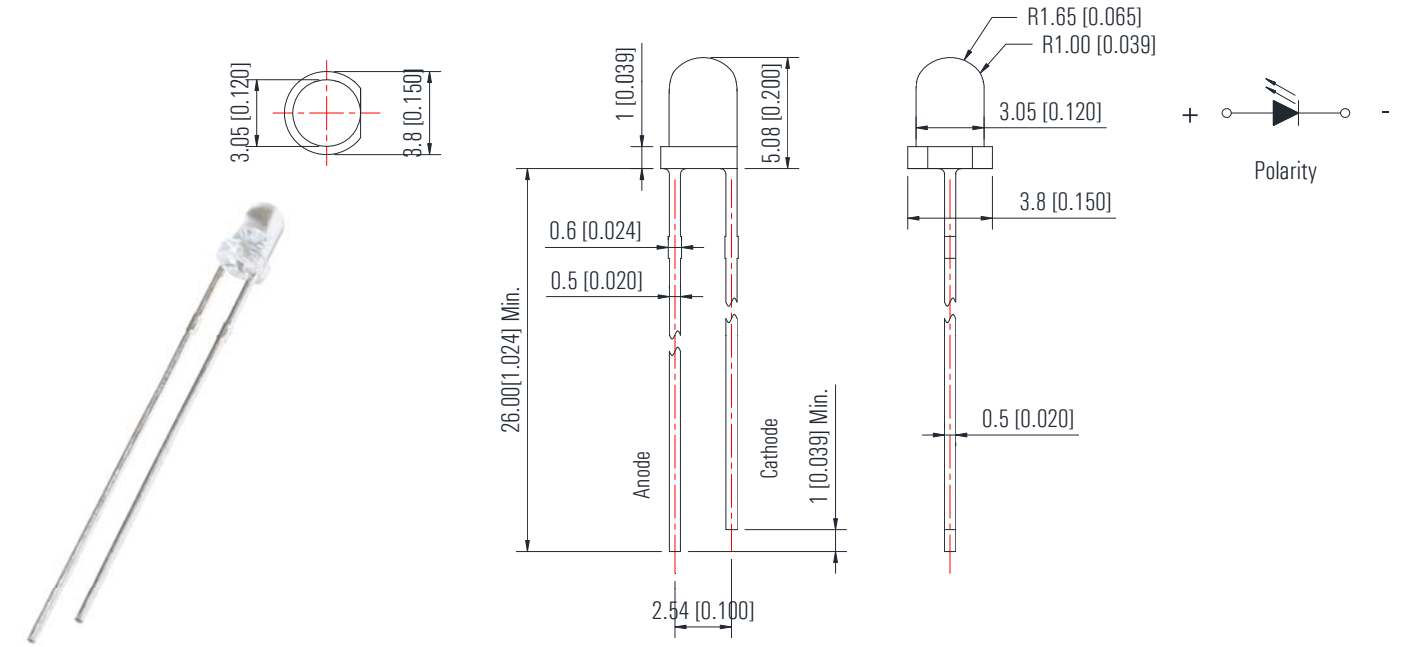

304IRC4B-5AD	AlGaAs/GaAs	Infrared	940	---	Water Clear	1.20	1.50	20	6.0	10.0	30
304IRT4B-5AE	AlGaAs/GaAs	Infrared	940	---	Blue Transparent	1.20	1.50		5.0	8.0	40
304HIRC4B-5CD	AlGaAs/AlGaAs	Infrared	880	---	Water Clear	1.30	1.60		8.0	10.0	30
304HIRT4B-5CE	AlGaAs/AlGaAs	Infrared	880	---	Blue Transparent	1.30	1.60		6.0	12.0	45
304SIRC4B-5AD	AlGaAs/AlGaAs	Infrared	850	---	Water Clear	1.40	1.60		6.0	12.0	30

Part Number	Chip Material	Emitting Color	λp (nm) / x	λd (nm) / y	Lens Color	VF (V)		Power (mW/Sr)			Viewing Angle
						Typ.	Max.	IF=mA	Min.	Typ.	2θ ½

5mm Round Standard Infrared Devices, T-1 3/4

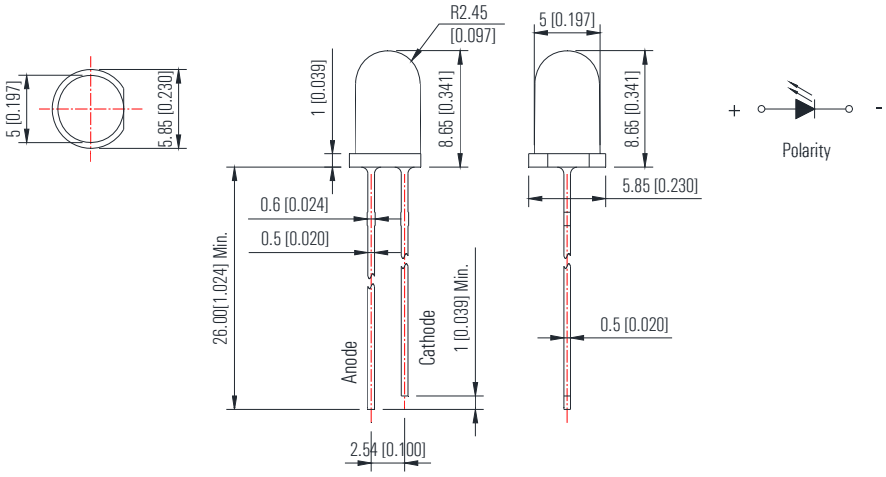

503IRC2E-5AC	AlGaAs/GaAs	Infrared	940	---	Water Clear	1.20	1.50	20	7.8	12.0	15
503IRC2E-5AE	AlGaAs/GaAs	Infrared	940	---	Water Clear	1.20	1.50		6.0	12.0	45
503IRT2E-5AC	AlGaAs/GaAs	Infrared	940	---	Blue Transparent	1.20	1.50		7.0	10.0	15
503HIRC2E-5CC	AlGaAs/AlGaAs	Infrared	880	---	Water Clear	1.30	1.60		7.8	12.0	
503HIRC2E-5CE	AlGaAs/AlGaAs	Infrared	880	---	Water Clear	1.30	1.60		6.5	13.0	45
503HIRT2E-5CC	AlGaAs/AlGaAs	Infrared	880	---	Blue Transparent	1.30	1.60		7.0	10.0	15
503SIRC2E-5AC	AlGaAs/AlGaAs	Infrared	850	---	Water Clear	1.40	1.60		7.8	15.0	
503SIRC2E-5AE	AlGaAs/AlGaAs	Infrared	850	---	Water Clear	1.40	1.60		8.0	15.0	45
503KIRC2E-4CE	AlGaAs/AlGaAs	Infrared	830	---	Water Clear	1.40	1.60		6.0	13.0	

5mm Round Standard Infrared Devices, T-1 3/4

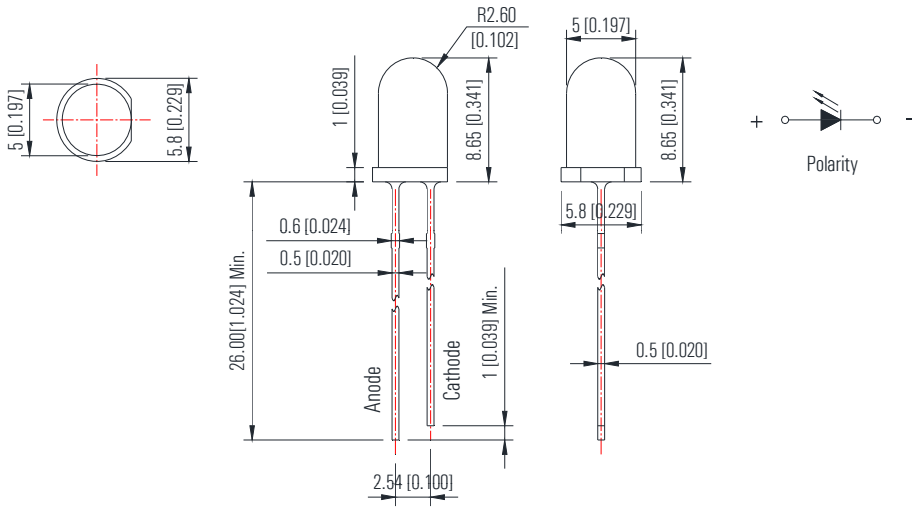

503IRC2V-5AD	AlGaAs/GaAs	Infrared	940	---	Water Clear	1.20	1.50	20	7.8	12.0	30
503IRT2V-5AD	AlGaAs/GaAs	Infrared	940	---	Blue Transparent	1.20	1.50		6.0	10.0	
503HIRC2V-5CD	AlGaAs/AlGaAs	Infrared	880	---	Water Clear	1.30	1.60		7.0	13.5	
503HIRT2V-5CD	AlGaAs/AlGaAs	Infrared	880	---	Blue Transparent	1.30	1.60		6.5	13.0	
503SIRC2V-5AD	AlGaAs/AlGaAs	Infrared	850	---	Water Clear	1.40	1.60		7.8	15.0	
503KIRC2V-4CD	AlGaAs/AlGaAs	Infrared	830	---	Water Clear	1.40	1.60		7.8	15.0	

Part Number	Chip Material	Emitting Color	λp (nm) / x	λd (nm) / y	Lens Color	VF (V)		Power (mW/Sr)			Viewing Angle
						Typ.	Max.	IF=mA	Min.	Typ.	2θ ½

5mm Round Infrared Devices, T-1 3/4

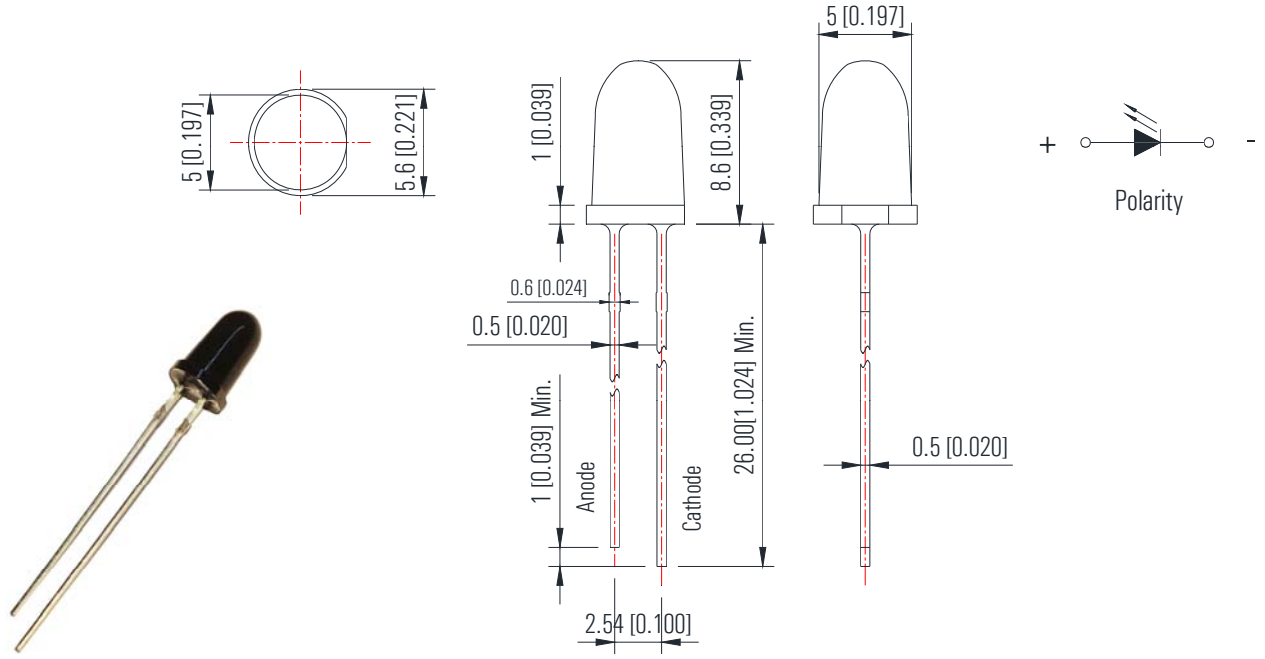

583SIRD2C-5CA-R	AlGaAs/GaAs	Infrared	850	---	Black	1.40	1.60	50	45.0	90.0	8
						1.60	1.80	100	150.0	350.0	

5mm Round Infrared Devices, T-1 3/4

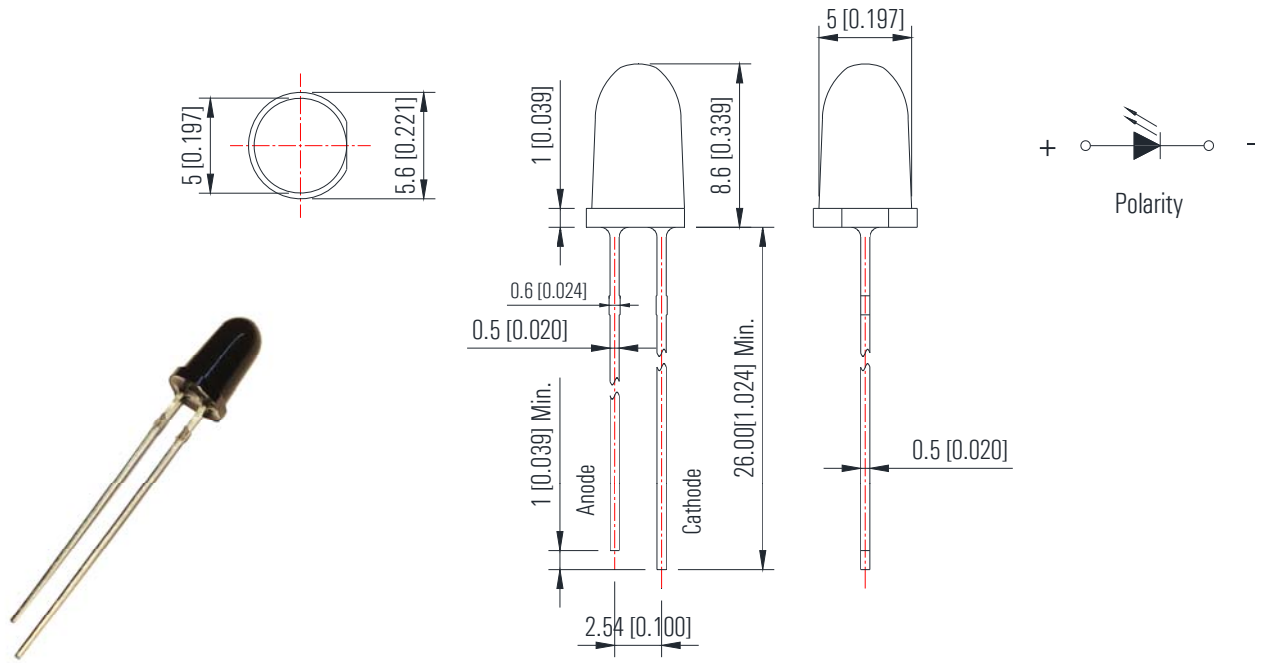

583SIRD2C-CRA	AlGaAs/GaAs	Infrared	850	---	Black	1.40	1.60	50	80.0	120.0	8
						1.60	1.70	100	180.0	450.0	

Part Number	Chip Material	Emitting Color	λp (nm) / x	λd (nm) / y	Lens Color	VF (V)		Power (mW/Sr)			Viewing Angle
						Typ.	Max.	IF=mA	Min.	Typ.	2θ ½

5mm Round Infrared Devices, T-1 3/4

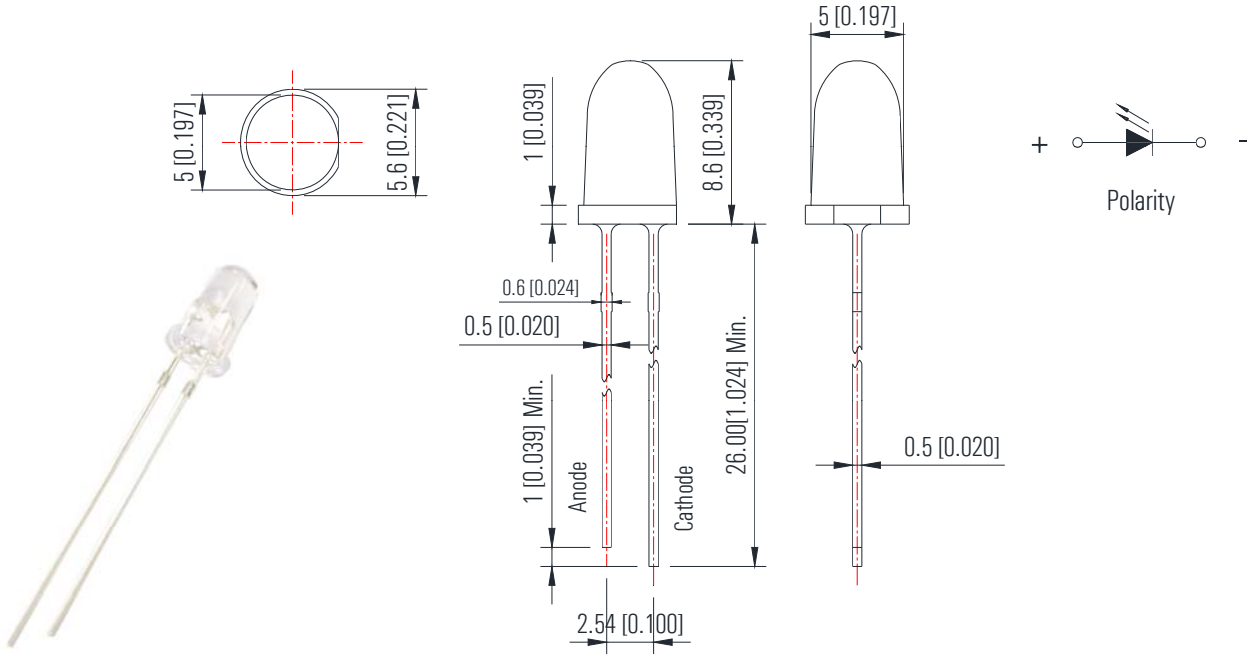

503SIRC5R-CRA-R	AlGaAs/GaAs	Infrared	850	---	Water Clear	1.40	1.60	50	380.0	500.0	6
						1.60	1.80	100	860.0	1100.0	

4.45mm×5.70mm Side View Infrared Devices

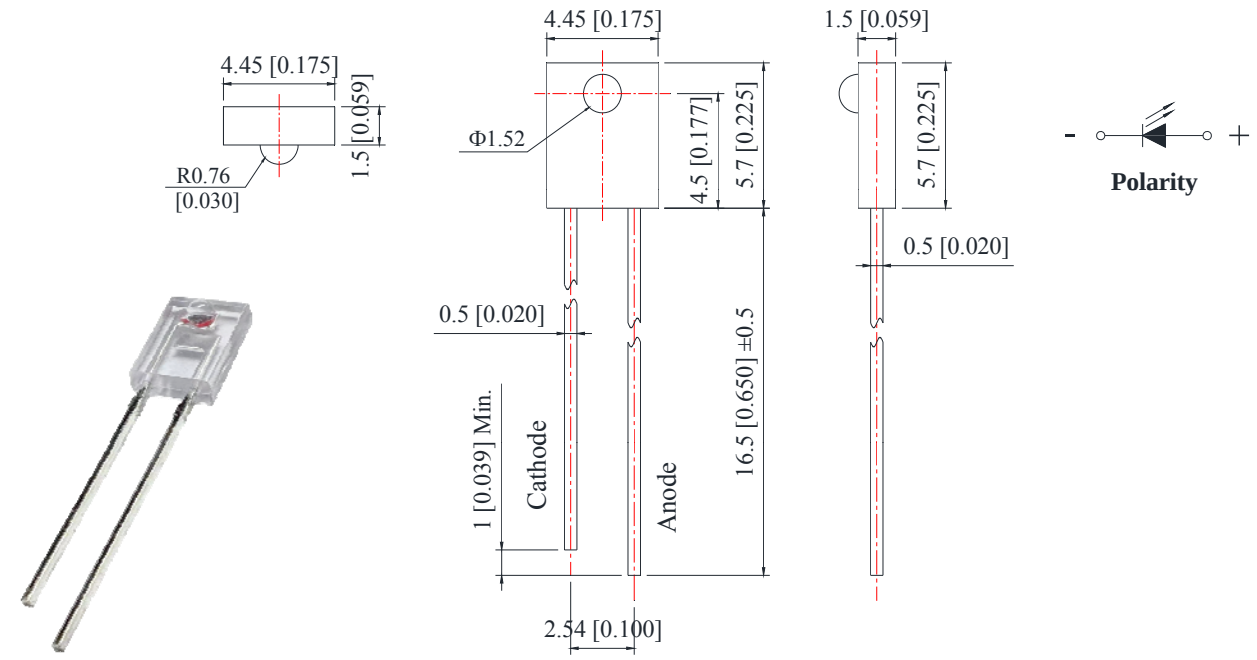

IR23C1	AlGaAs/GaAs	Infrared	940	---	Water Clear	1.20	1.50	4	0.36	0.54	30

Part Number	Chip Material	Emitting Color	λp (nm) / x	λd (nm) / y	Lens Color	VF (V)		Power (mW/Sr)			Viewing Angle
						Typ.	Max.	IF=mA	Min.	Typ.	2θ ½

1.60mm×0.80mm×0.80mm (0603) SMD Infrared Devices

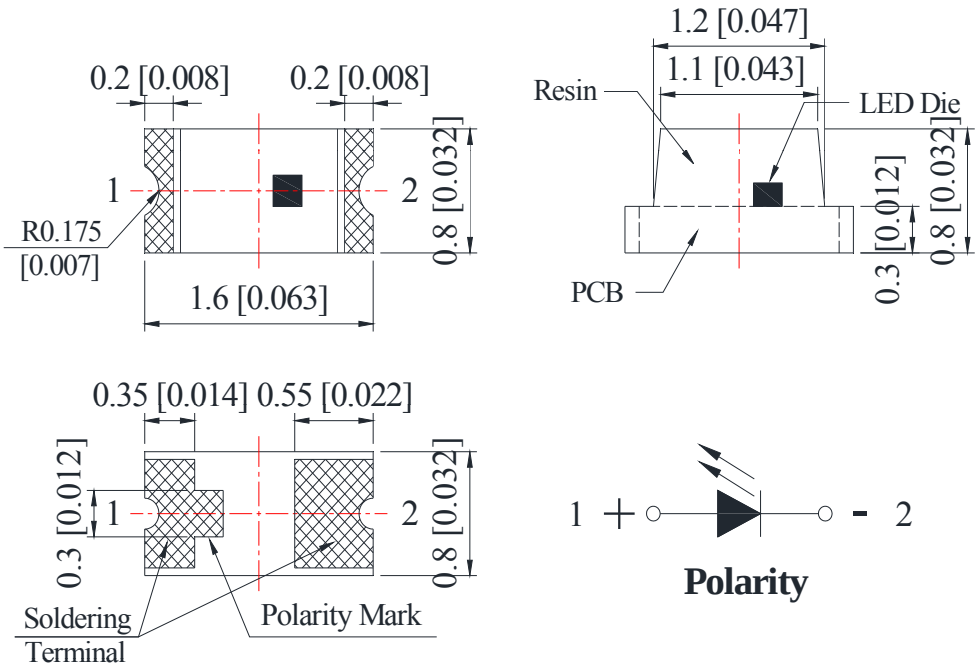

S190IRC-2A	AlGaAs/GaAs	Infrared	940	---	Water Clear	1.20	1.50	20	0.20	0.35	140

2.00mm×1.25mm×1.10mm (0805) SMD Infrared Devices

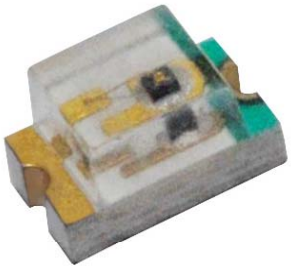

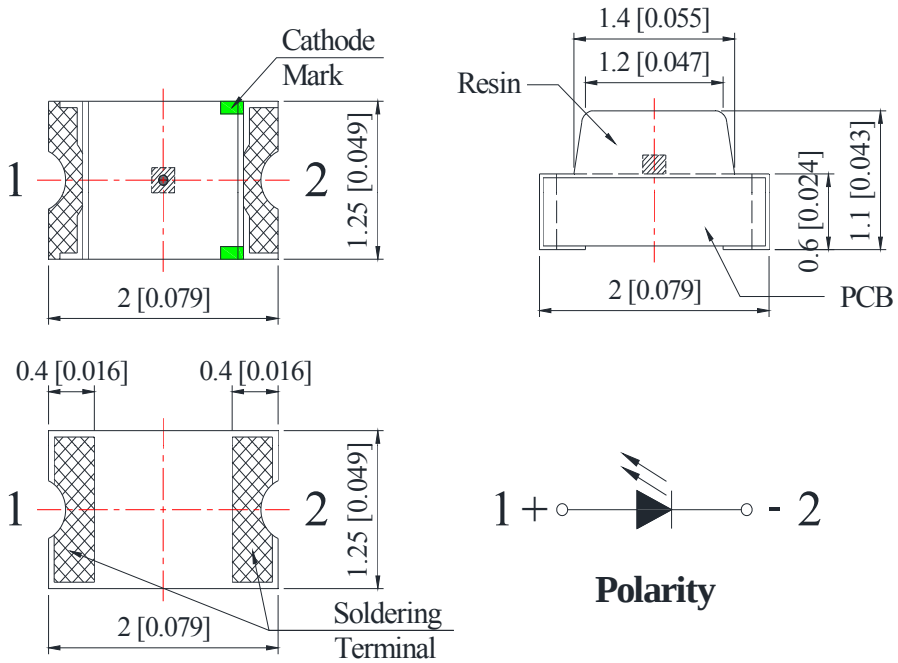

S170IRC-2A	AlGaAs/GaAs	Infrared	940	---	Water Clear	1.20	1.50	20	0.20	0.35	140

Part Number	Chip Material	Emitting Color	λp (nm) / x	λd (nm) / y	Lens Color	VF (V)		Power (mW/Sr)			Viewing Angle
						Typ.	Max.	IF=mA	Min.	Typ.	2θ ½

3.20mm×1.60mm×1.10mm (1206) SMD Infrared Devices

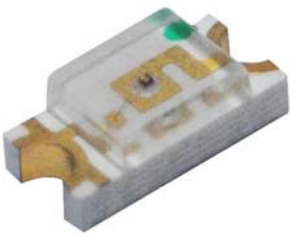

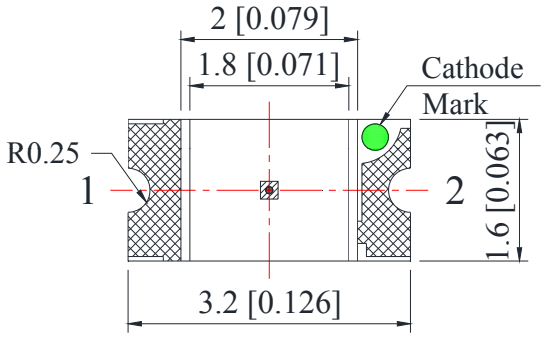

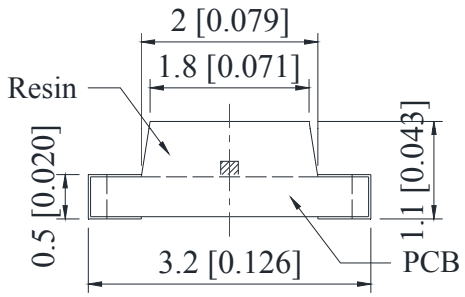

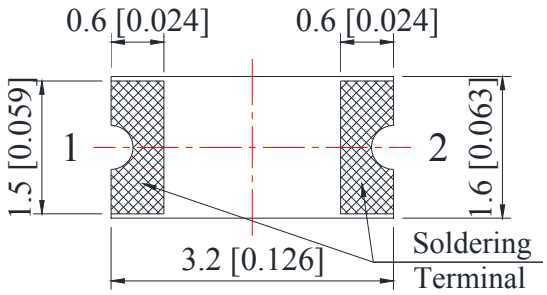

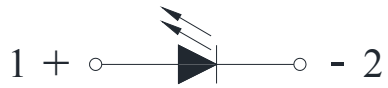

Polarity

S150IRC-2A	AlGaAs/GaAs	Infrared	940	---	Water Clear	1.20	1.50	20	0.20	0.35	140

2.15mm×2.40mm×2.75mm (1.80mm Round) Subminiature Axial Infrared Devices

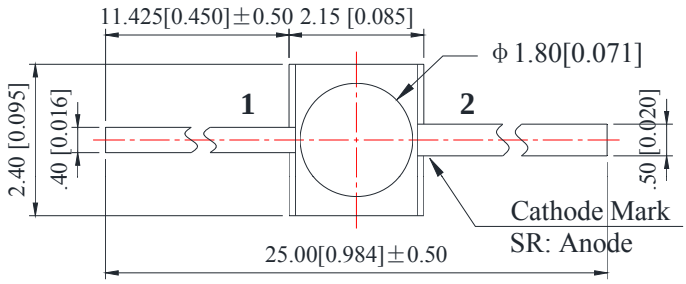

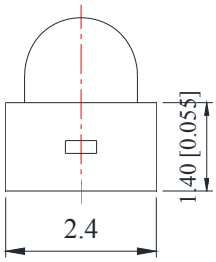

Polarity

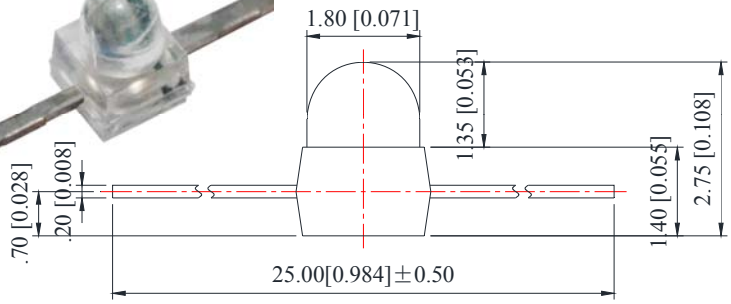

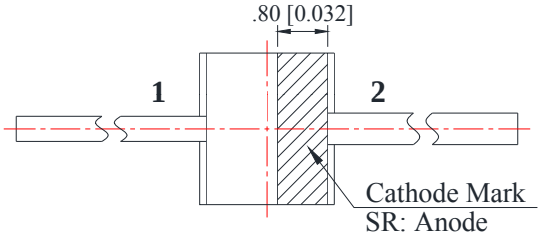

AR180IRC-2A	AlGaAs/GaAs	Infrared	940	---	Water Clear	1.20	1.50	20	3.00	6.00	25

Part Number	Chip Material	Emitting Color	λp (nm) / x	λd (nm) / y	Lens Color	VF (V)		Power (mW/Sr)			Viewing Angle
						Typ.	Max.	IF=mA	Min.	Typ.	2θ ½

2.15mm×2.40mm×2.75mm (1.80mm Round) Subminiature Axial Infrared Devices

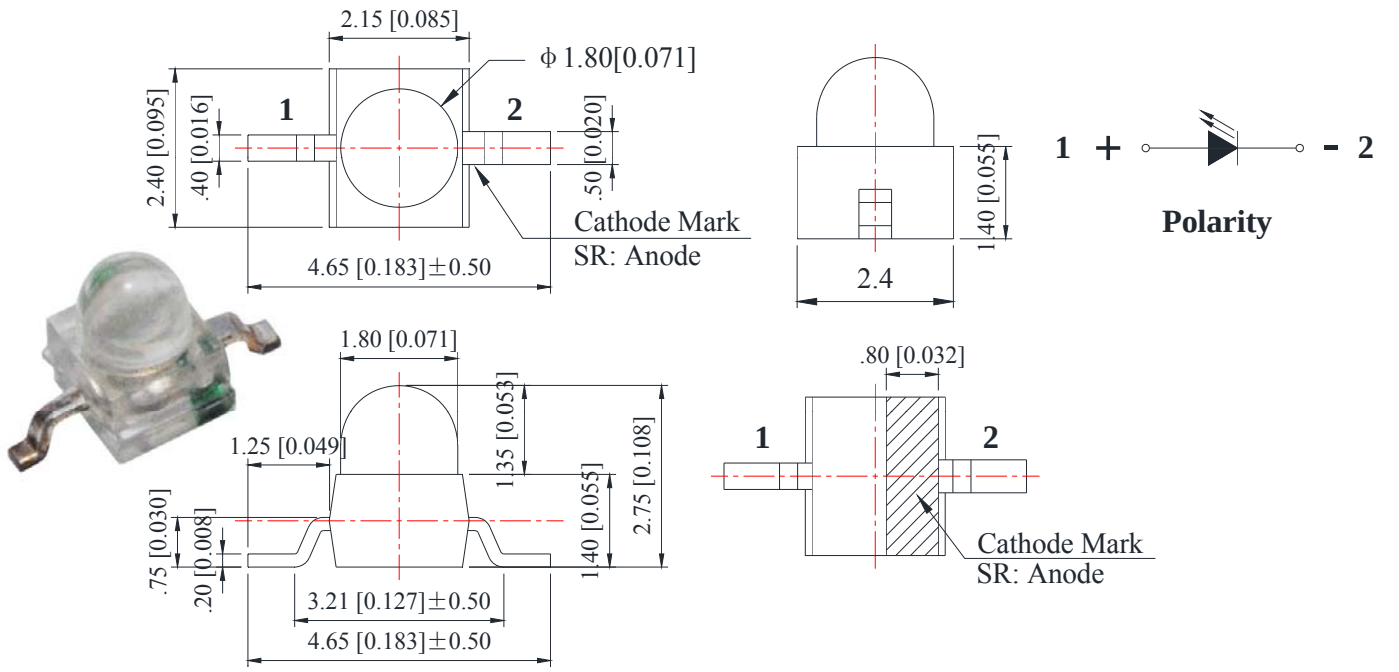

AR180IRC-2A/TR2	AlGaAs/GaAs	Infrared	940	---	Water Clear	1.20	1.50	20	3.00	6.00	25

3.50mm×2.80mm×2.40mm PLCC-2 Narrow Angle Mid Power Infrared Devices

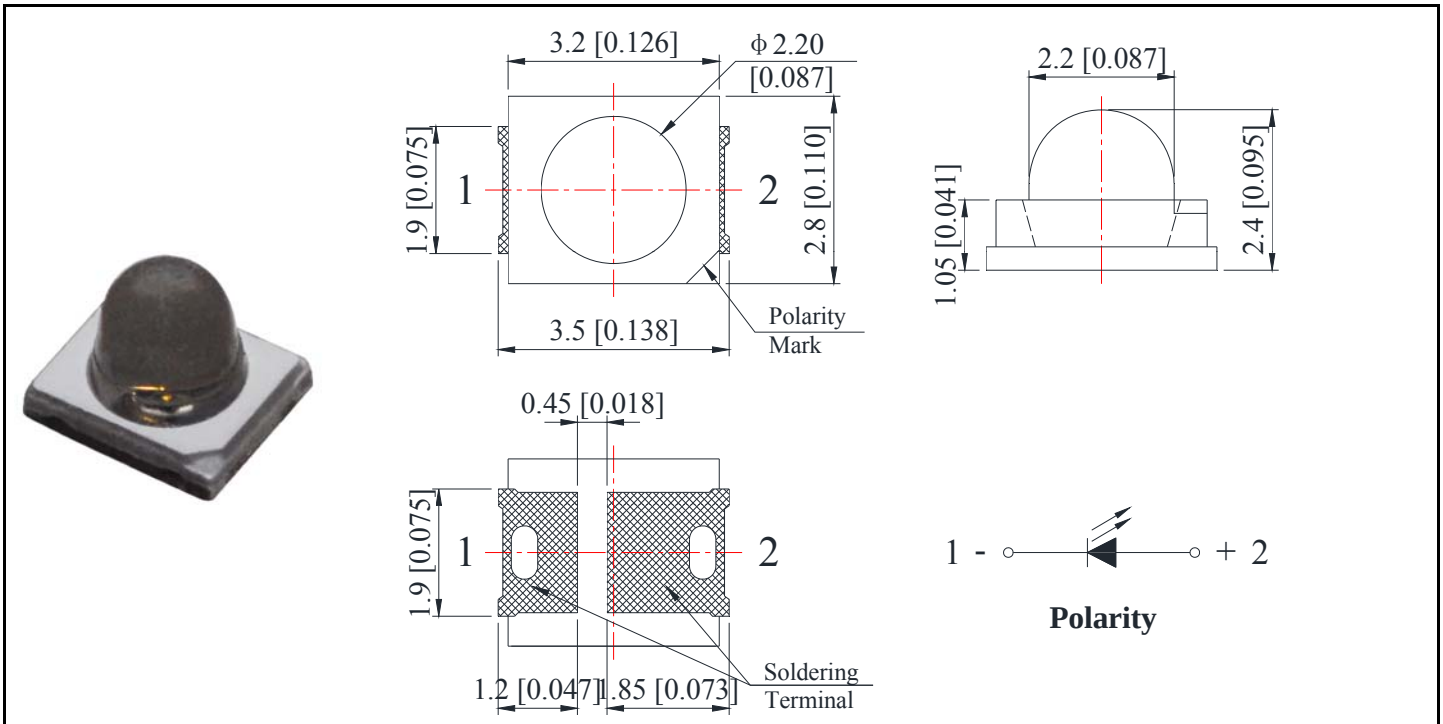

R2835SIR1C-2B	AlGaAs/GaAs	Infrared	850	---	Water Clear	1.40	1.60	100	100.0	140.0	30

Part Number	Chip Material	Emitting Color	λp (nm) / x	λd (nm) / y	Lens Color	VF (V)		Power (mW/Sr)			Viewing Angle
						Typ.	Max.	IF=mA	Min.	Typ.	2θ ½

1W, 3W High Power Infrared Devices

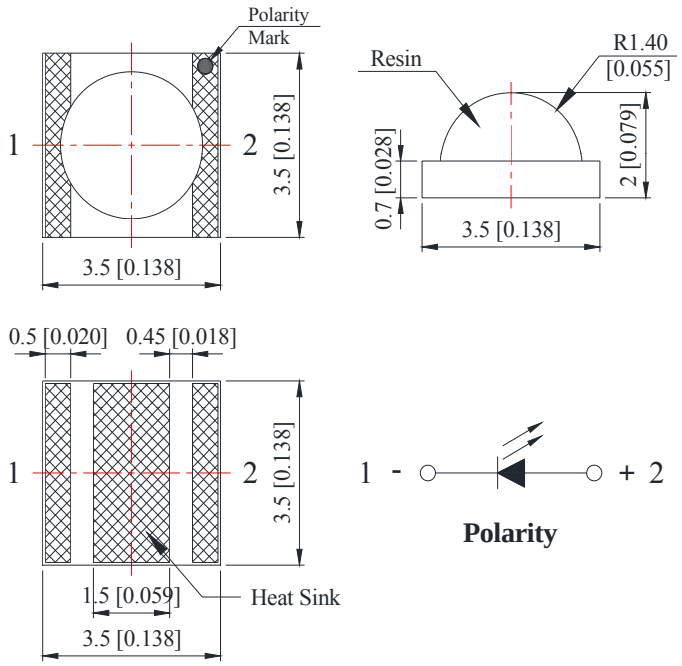

C3535SIRC-2B	AlGaAs/GaAs	Infrared	850	---	Water Clear	1.80	2.00	350	130.0	160.0	120
								700	300.0	330.0	

1W, 3W Narrow Angle High Power Infrared Devices

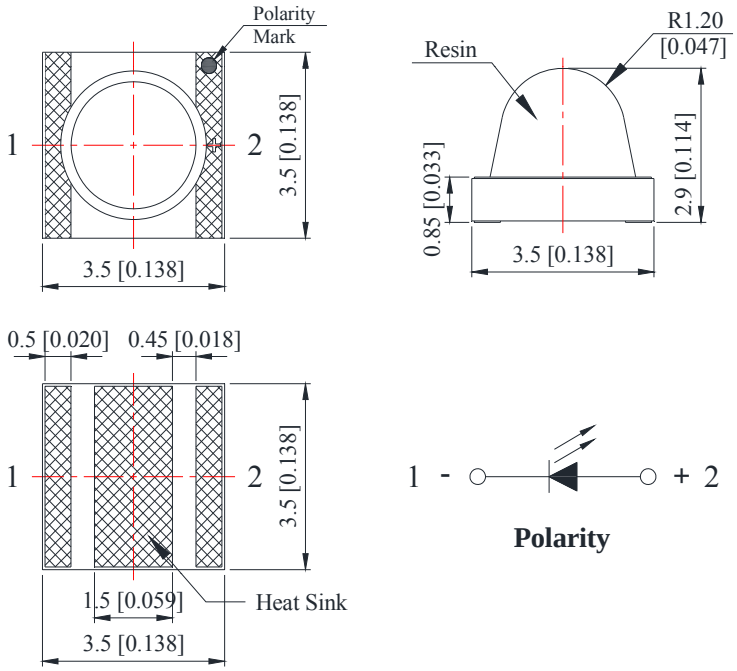

C3535SIR2C-3B	AlGaAs/GaAs	Infrared	850	---	Water Clear	1.80	2.00	350	130.0	160.0	60
								700	300.0	330.0	
								1000	400.0	430.0	

1. All dimensions are in millimeters (inches).
2. Tolerance is ±0.10mm (.004") unless otherwise noted.
3. Specifications are subject to change without notice.

Part Number	Chip Material	Lens Color	Rise & Fall Time	$V_{(BR)R}$ Min. (V)	I_L		I_D	
					Ee=mW/cm²	Typ. (μA)	Ee=mW/cm²	Max. (nA)

3mm Silicon PIN Photodiode, T-1

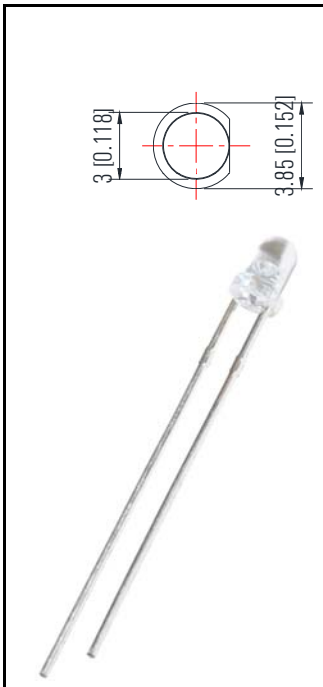

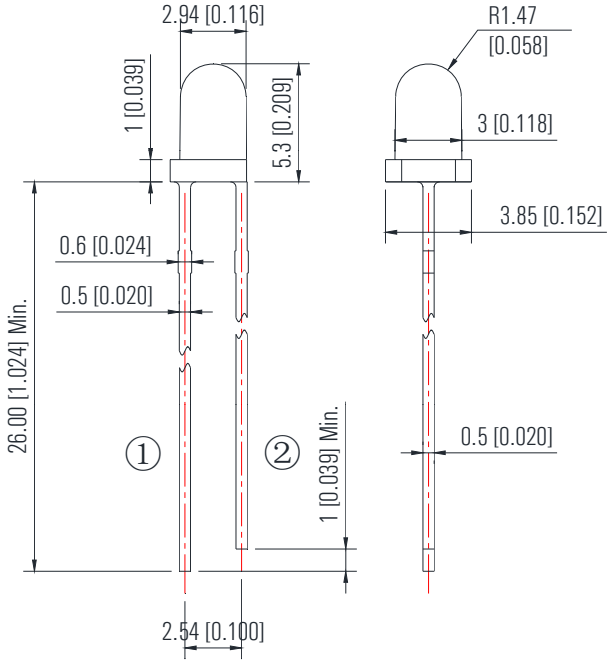

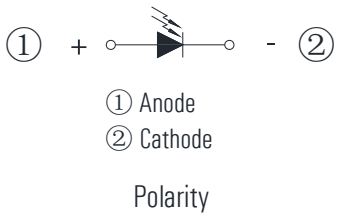

304PDC2E-3A	Silicon	Water Clear	45 / 45	32	20	35	5	30

3mm Silicon PIN Photodiode, T-1

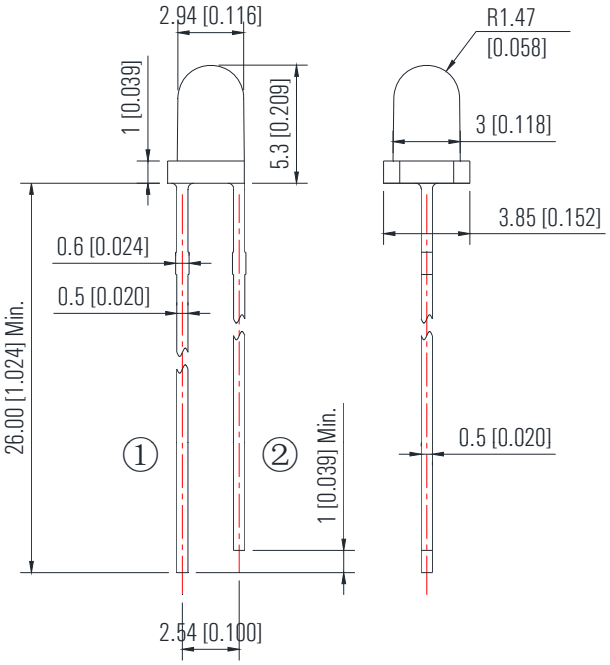

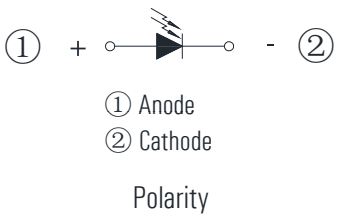

304PDD2E-3A	Silicon	Black	45 / 45	32	20	35	5	30

Part Number	Chip Material	Lens Color	Rise & Fall Time	$V_{(BR)R}$ Min. (V)	I_L		I_D	
					Ee=mW/cm²	Typ. (μA)	Ee=mW/cm²	Max. (nA)

5mm Silicon PIN Photodiode, T-1 3/4

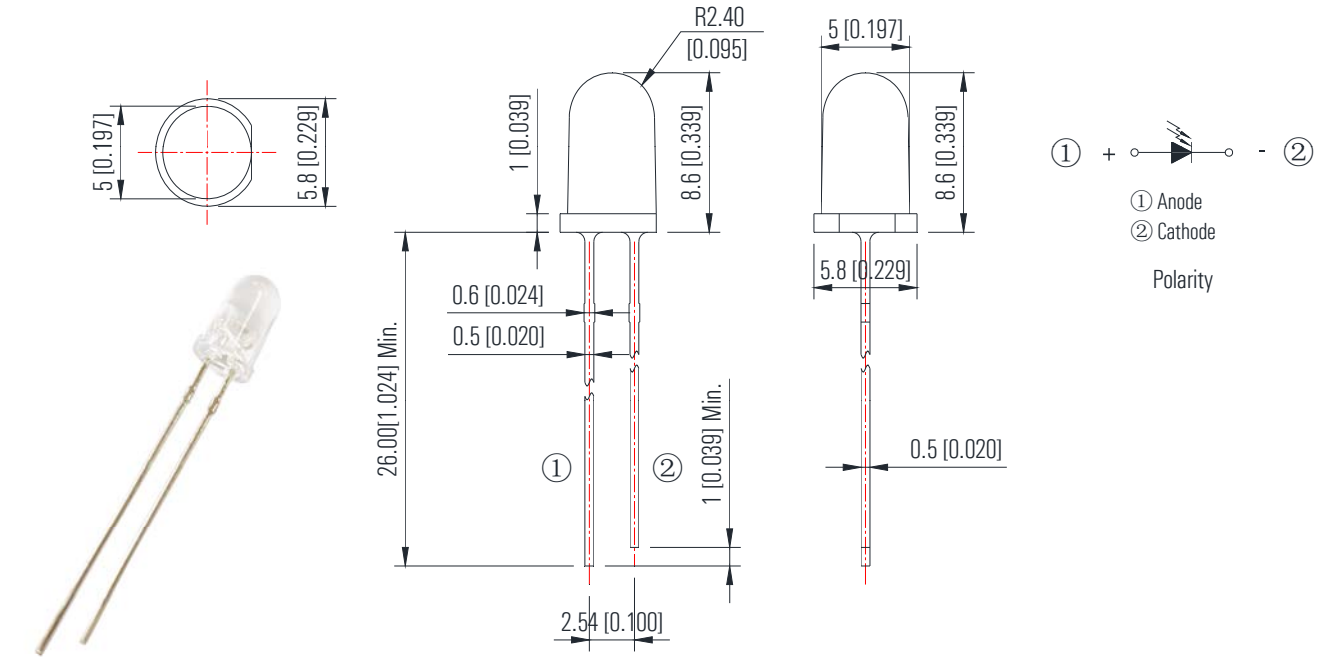

504PDC2B-3A	Silicon	Water Clear	45 / 45	32	20	35	5	30

5mm Silicon PIN Photodiode, T-1 3/4

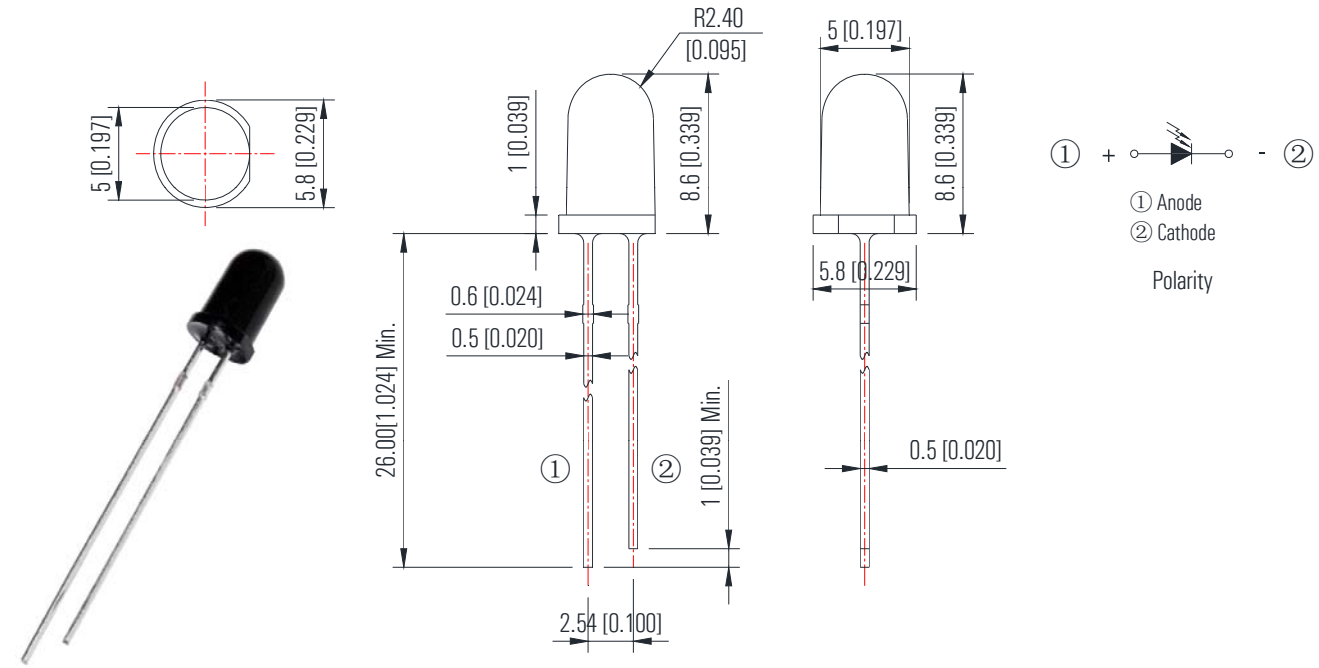

504PDD2B-3A	Silicon	Black	45 / 45	32	20	35	5	30

Part Number	Chip Material	Lens Color	Rise & Fall Time	$V_{(BR)R}$ Min. (V)	I_L		I_D	
					Ee=mW/cm²	Typ. (μA)	Ee=mW/cm²	Max. (nA)

5mm Silicon PIN Photodiode, T-1 3/4

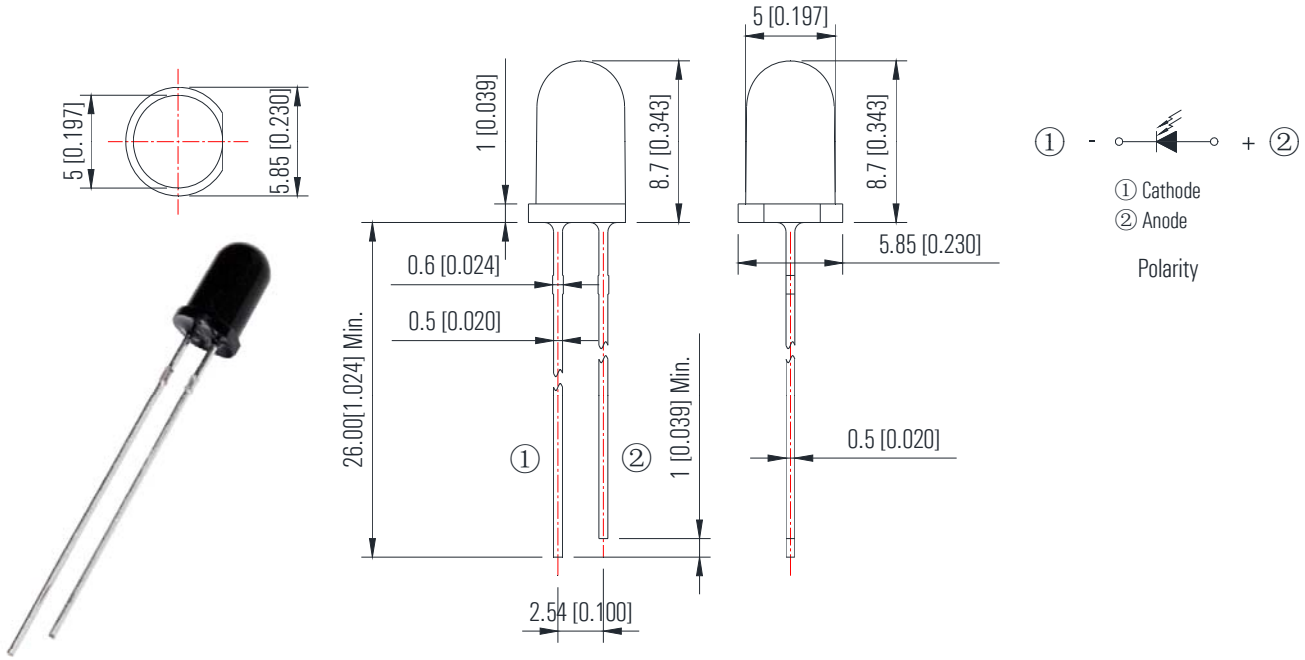

503PDD1A-5A-R	Silicon	Black	30 / 30	35	20	35	5	10

5mm Silicon PIN Photodiode, T-1 3/4

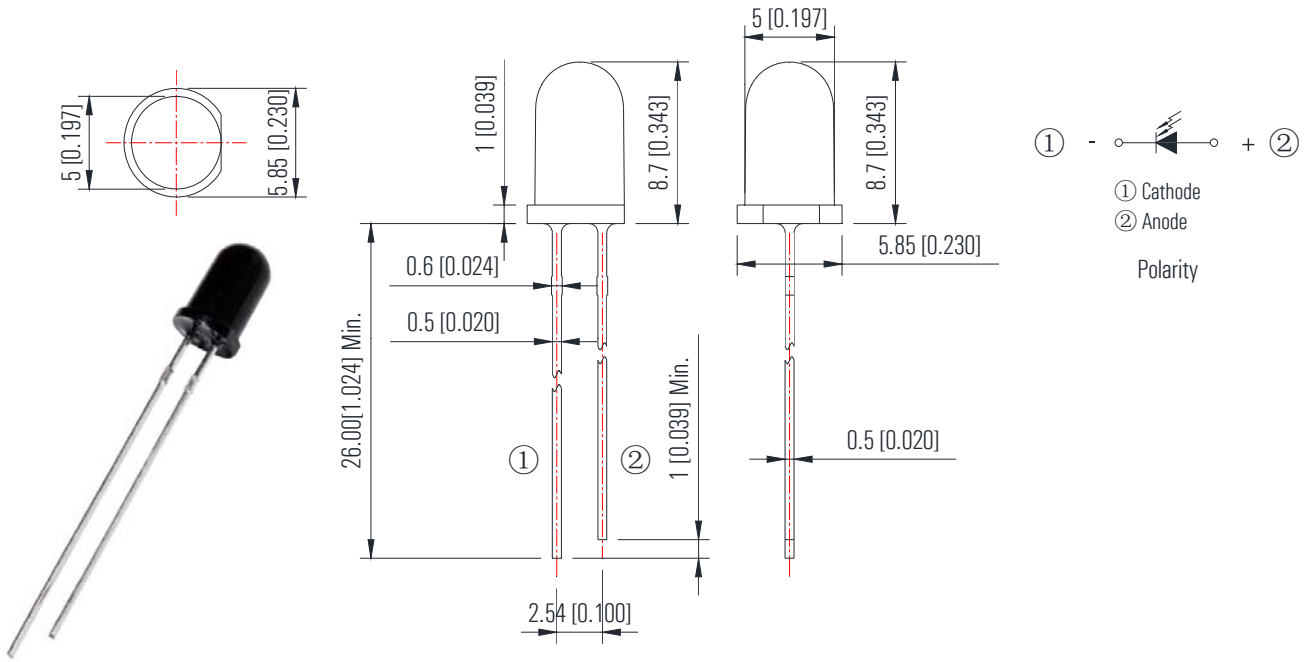

503PDD1A-5C-R	Silicon	Black	30 / 30	35	20	30	5	10

1. All dimensions are in millimeters (inches).
2. Tolerance is ±0.25mm (.010") unless otherwise noted.
3. Specifications are subject to change without notice.

Part Number	Chip Material	Lens Color	Rise & Fall Time (μ	BVCEO Min. (V)	VCE (SAT)		IC (ON)	
					Ee=mW/cm²	Max. (V)	Ee=mW/cm²	Min. (mA)

3mm Round Standard Phototransistor, T-1

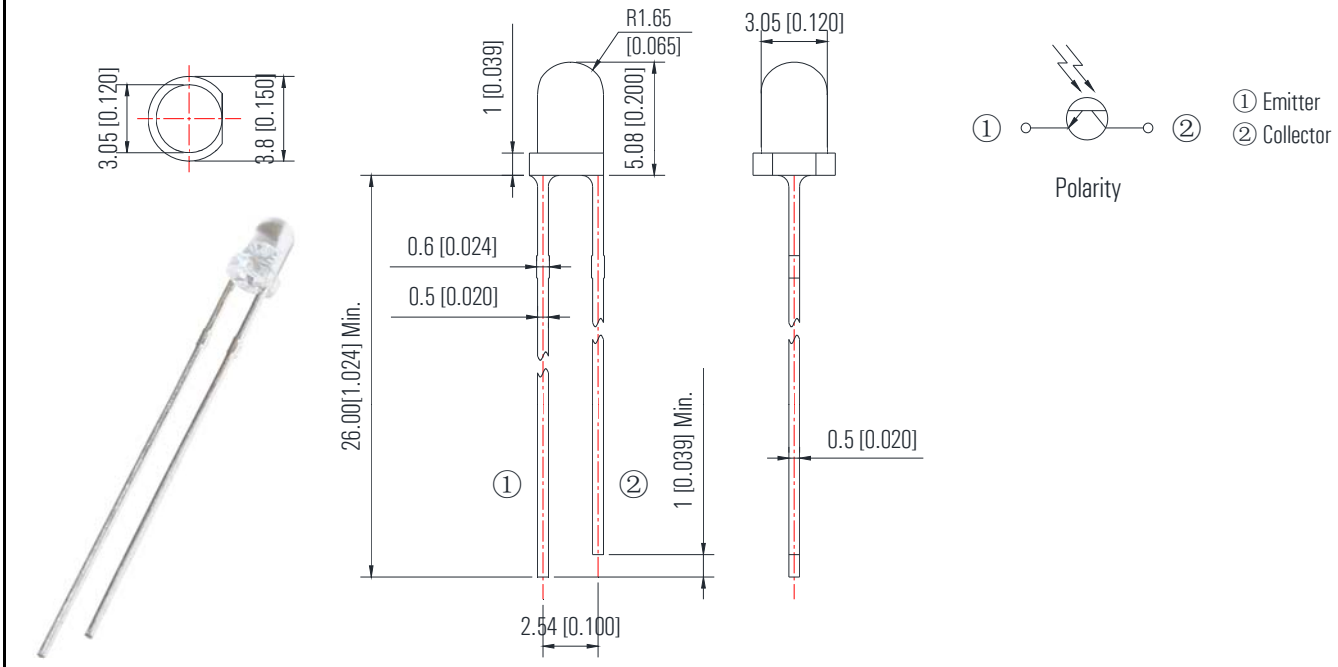

304PTC4B-1A	Silicon	Water Clear	15 / 15	30	1.00	0.40	1.00	0.70

3mm Round Standard Phototransistor, T-1

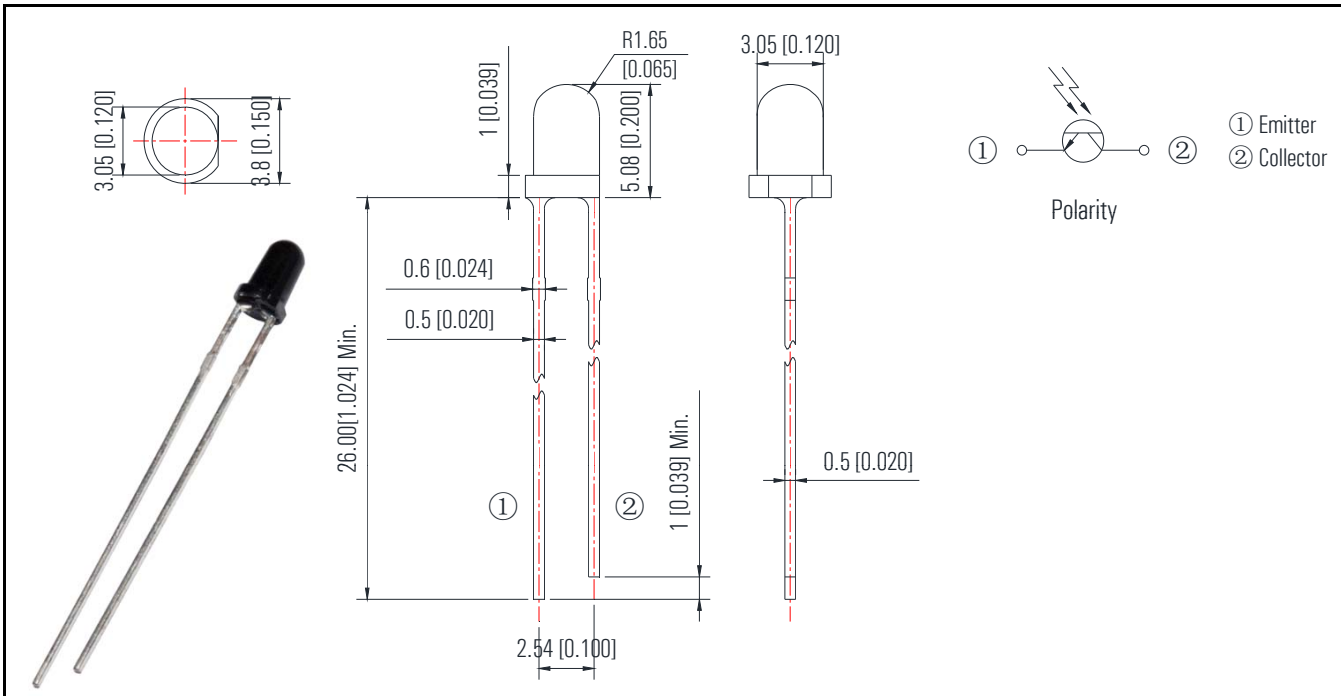

304PTD4B-1A	Silicon	Black	15 / 15	30	1.00	0.40	1.00	0.70

Part Number	Chip Material	Lens Color	Rise & Fall Time (μ	BVCEO Min. (V)	VCE (SAT)		IC (ON)	
					Ee=mW/cm²	Max. (V)	Ee=mW/cm²	Min. (mA)

5mm Round Standard Phototransistor, T-1 3/4

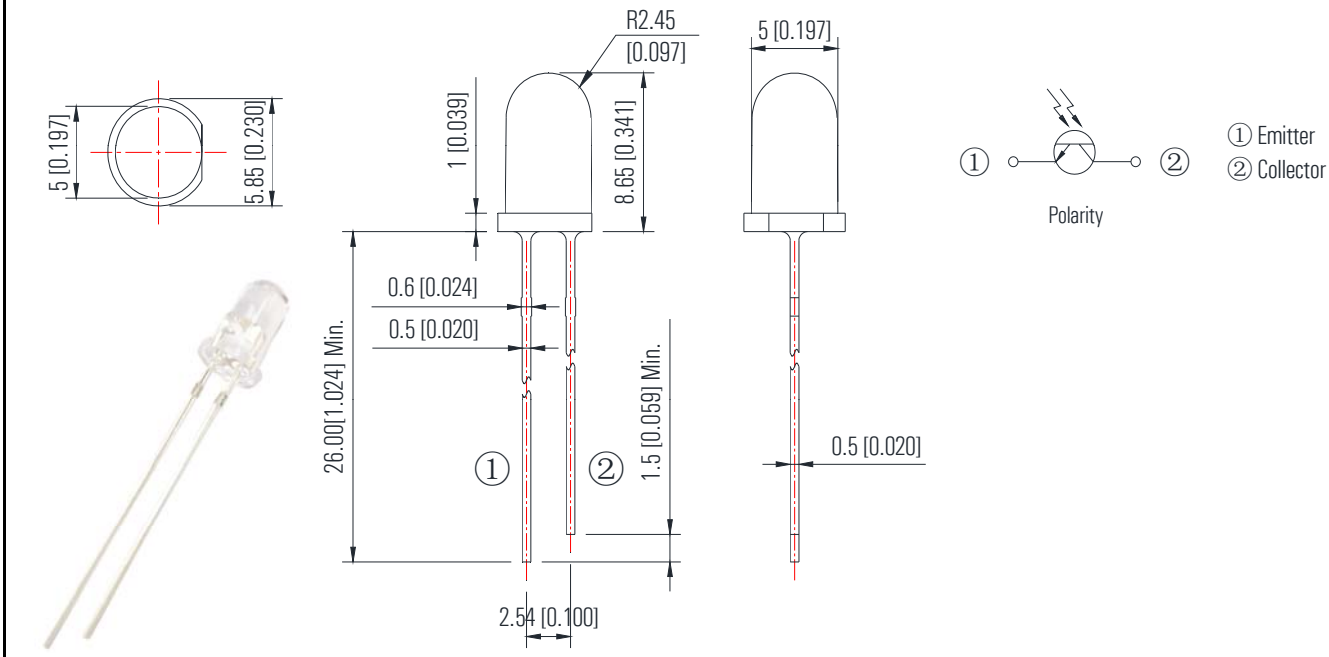

503PTC2E-1A	Silicon	Water Clear	15 / 15	30	1.00	0.40	1.00	0.70

5mm Round Standard Phototransistor, T-1 3/4

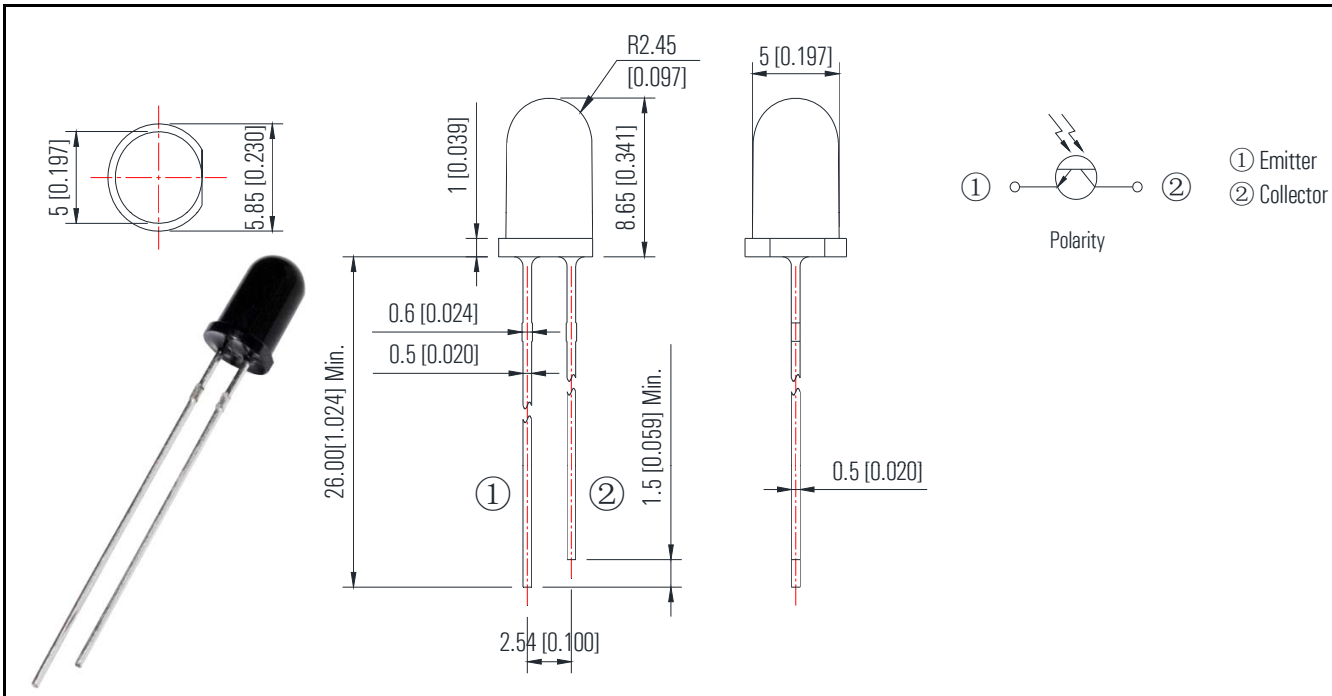

503PTD2E-1A	Silicon	Black	15 / 15	30	1.00	0.40	1.00	0.70

Part Number	Chip Material	Lens Color	Rise & Fall Time (μ	BVCEO Min. (V)	VCE (SAT)		Ic (ON)	
					Ee=mW/cm²	Max. (V)	Ee=mW/cm²	Min. (mA)

4.45mm×5.70mm Side View Phototransistor

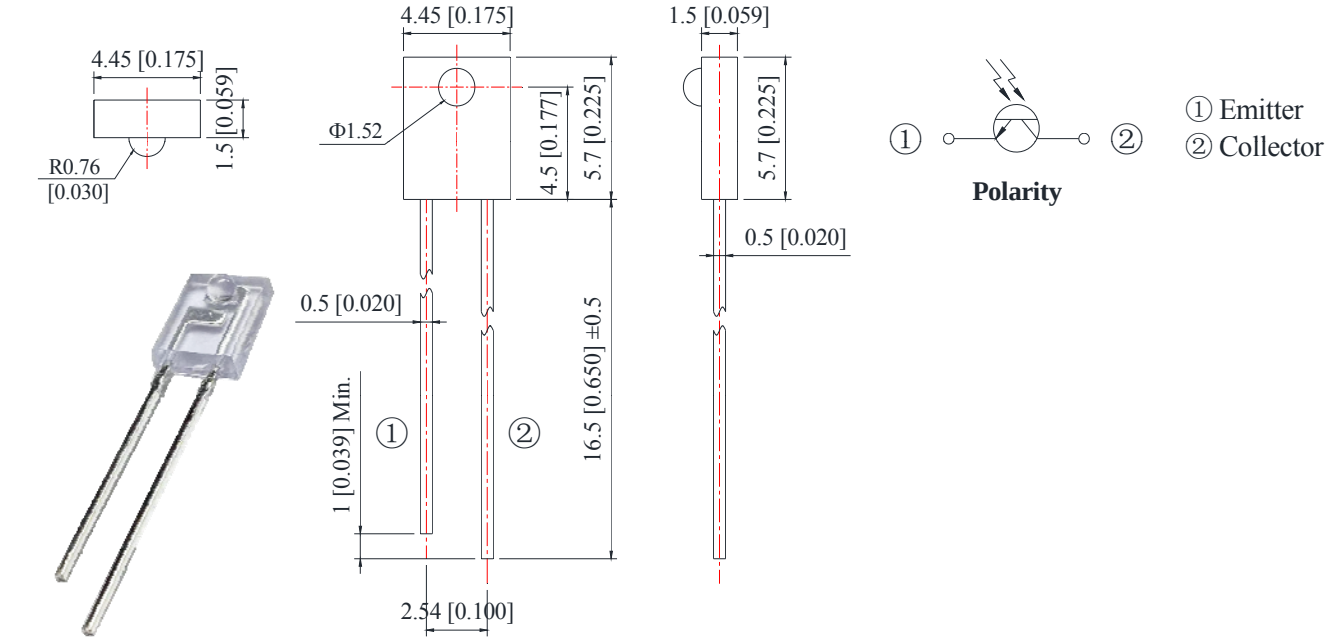

PTC23C1	Silicon	Water Clear	25 / 25	30	1.00	0.50	1.00	1.00

3.20mm×1.60mm×1.10mm (1206) Chip Phototransistor

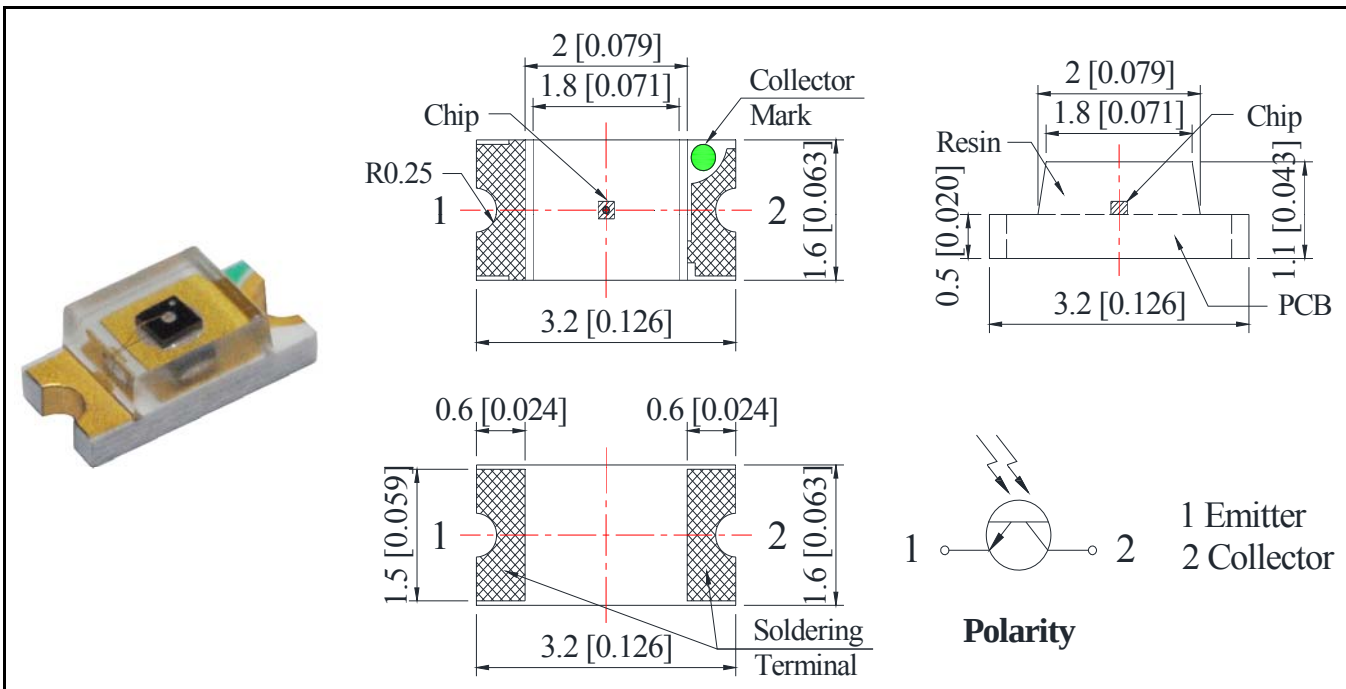

S150PTC-1A	Silicon	Water Clear	15 / 15	30	1.00	0.40	1.00	0.10

Part Number	Chip Material	Lens Color	Rise & Fall Time (μ	BVCEO Min. (V)	VCE (SAT)		IC (ON)	
					Ee=mW/cm²	Max. (V)	Ee=mW/cm²	Min. (mA)

3.20mm×1.60mm×1.10mm (1206) Chip Phototransistor

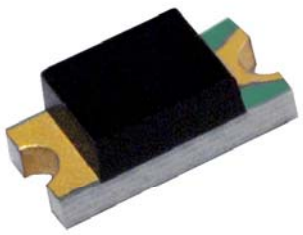

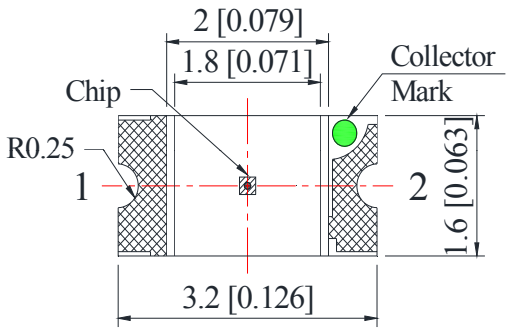

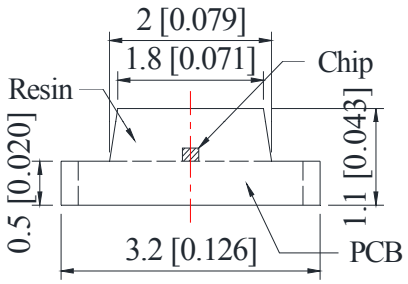

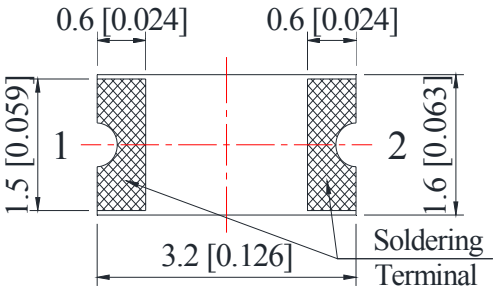

S150PTD-1A	Silicon	Black	15 / 15	30	1.00	0.40	1.00	0.10

2.15mm×2.40mm×2.75mm (Φ1.80mm Round) Subminiature Axial Chip Phototransistor

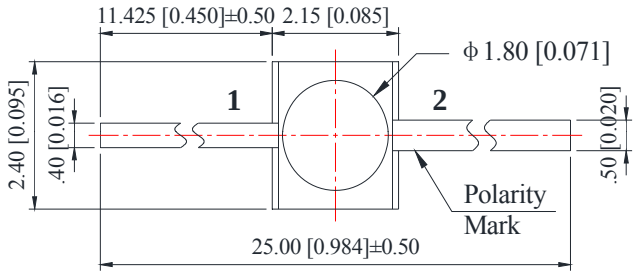

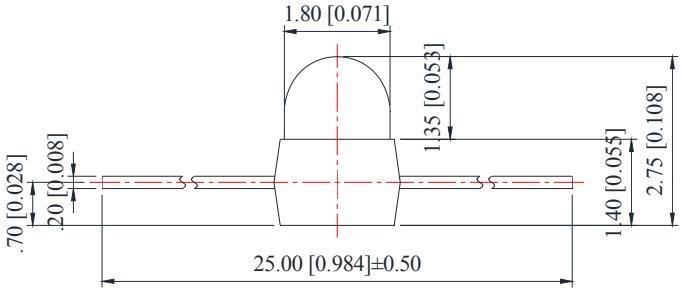

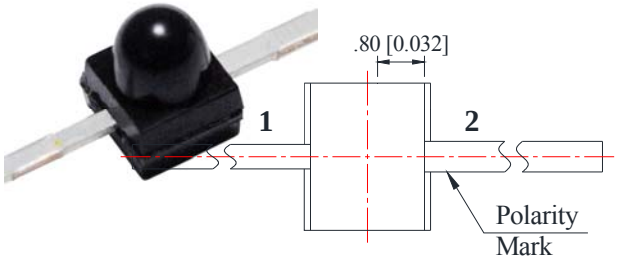

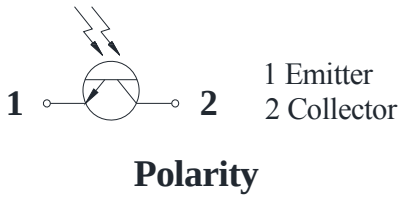

AR180PTD-1A	Silicon	Black	15 / 15	30	1.00	0.30	1.00	1.00

Part Number	Chip Material	Lens Color	Rise & Fall Time (μ	BVCEO Min. (V)	VCE (SAT)		Ic (ON)	
					Ee=mW/cm²	Max. (V)	Ee=mW/cm²	Min. (mA)

2.15mm×2.40mm×2.75mm (Φ1.80mm Round) Subminiature Axial Chip Phototransistor

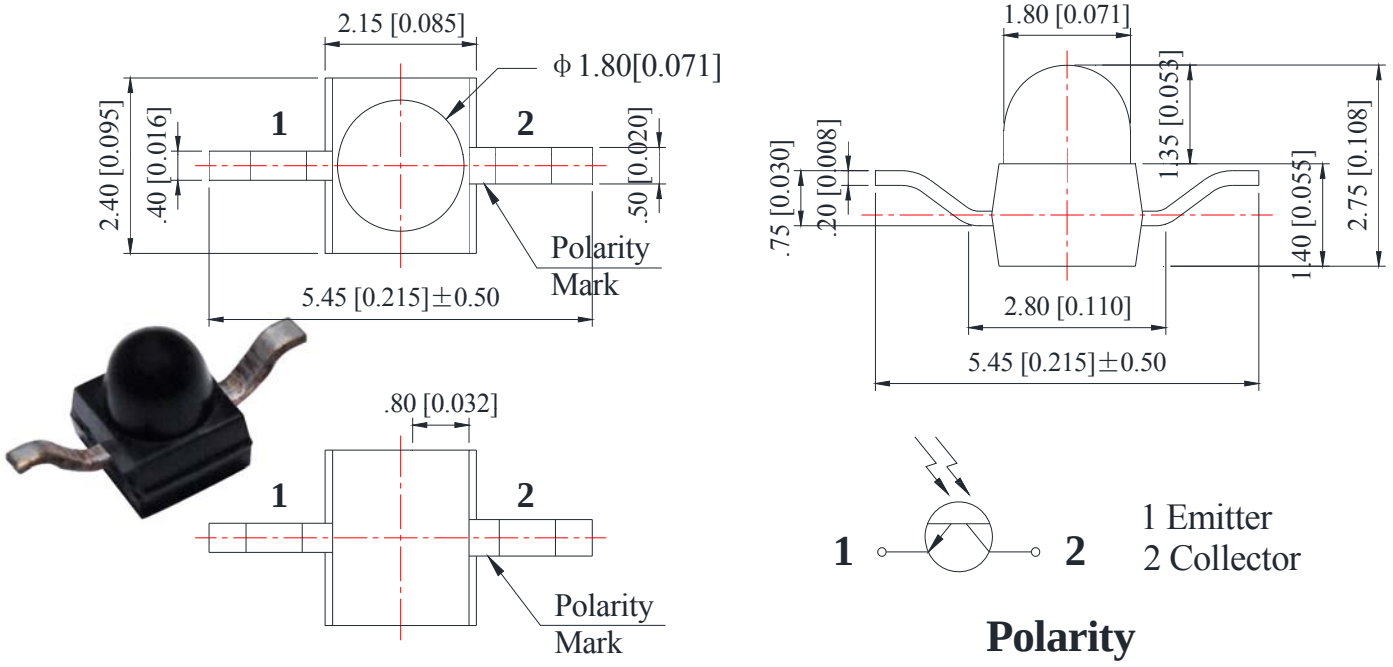

AR180PTD-1A/TR5	Silicon	Black	15 / 15	30	1.00	0.30	1.00	1.00

1. All dimensions are in millimeters (inches).
2. Tolerance is ±0.25mm (.010") unless otherwise noted.
3. Specifications are subject to change without notice.

Part Number	B.P.F. Center Frequency	Supply Voltage Typ. (V)	Supply Current Typ. (mA)	Transmission Distance Min. (m)	Angle θh (°)

Infrared Remote Control Receiver Module (IRM)

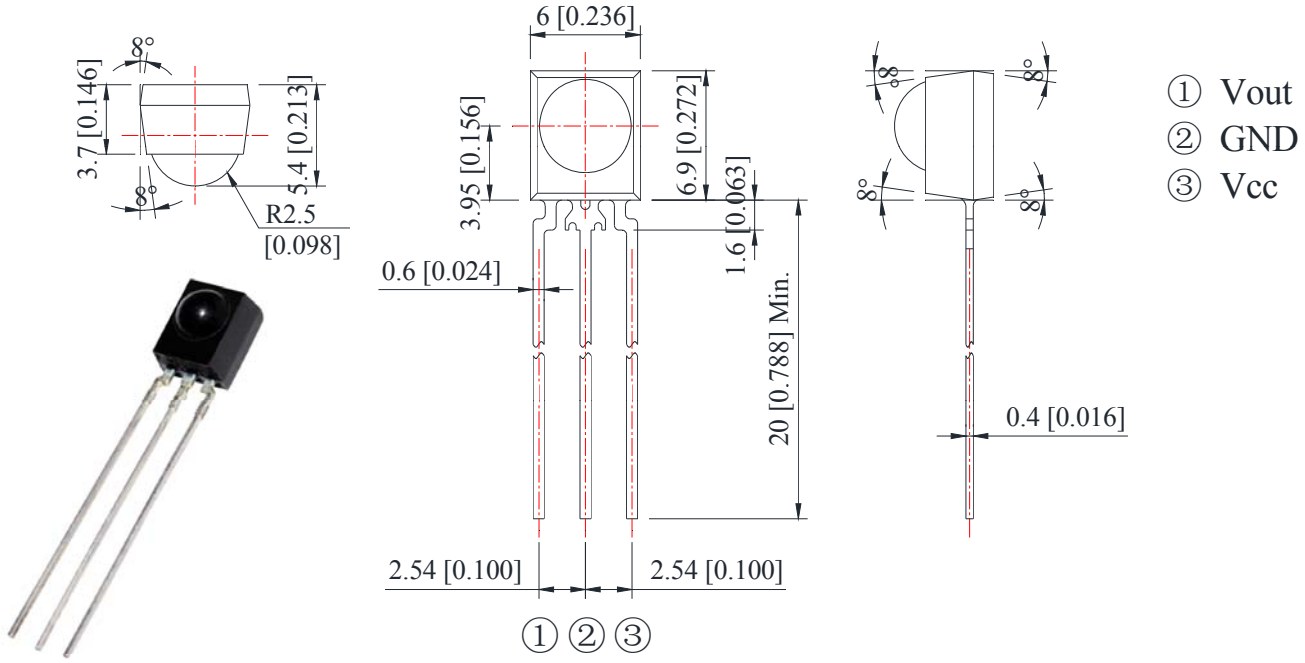

M6036	36	5.00	1.30	14	90

Infrared Remote Control Receiver Module (IRM)

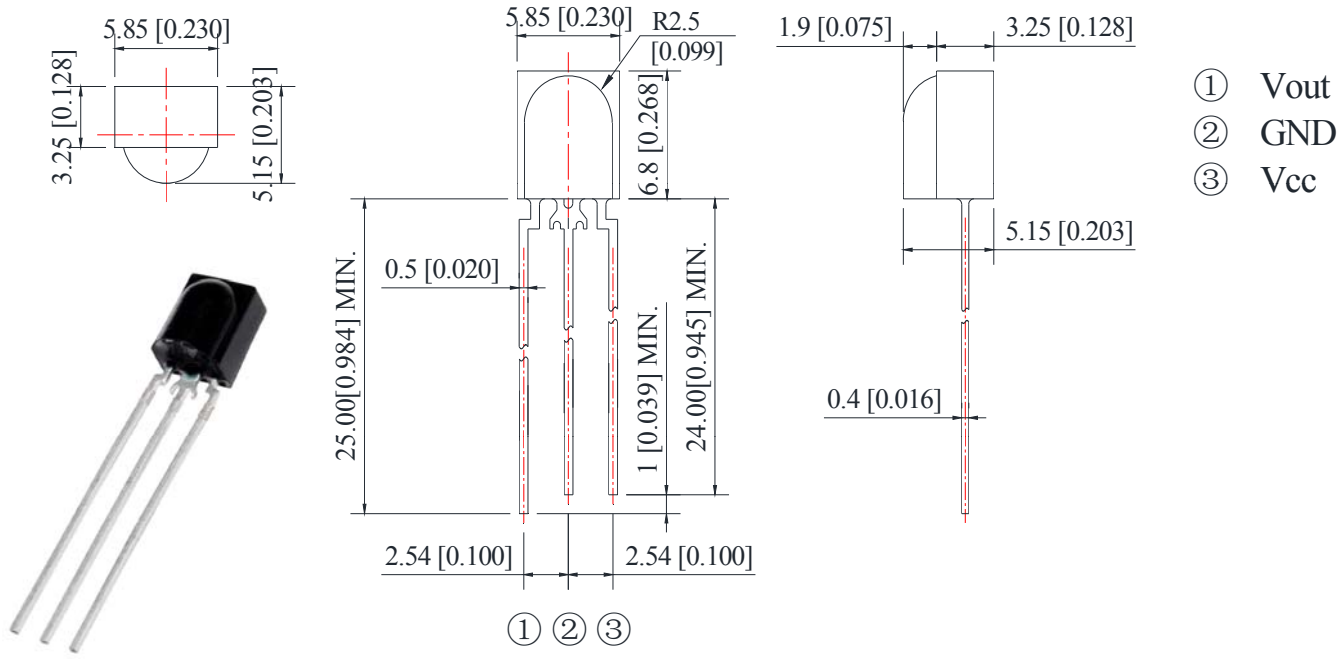

M138S-2	38	5.00	1.30	14	90

Part Number	B.P.F. Center Frequency	Supply Voltage Typ. (V)	Supply Current Typ. (mA)	Transmission Distance Min. (m)	Angle θh (°)

Infrared Remote Control Receiver Module (IRM)

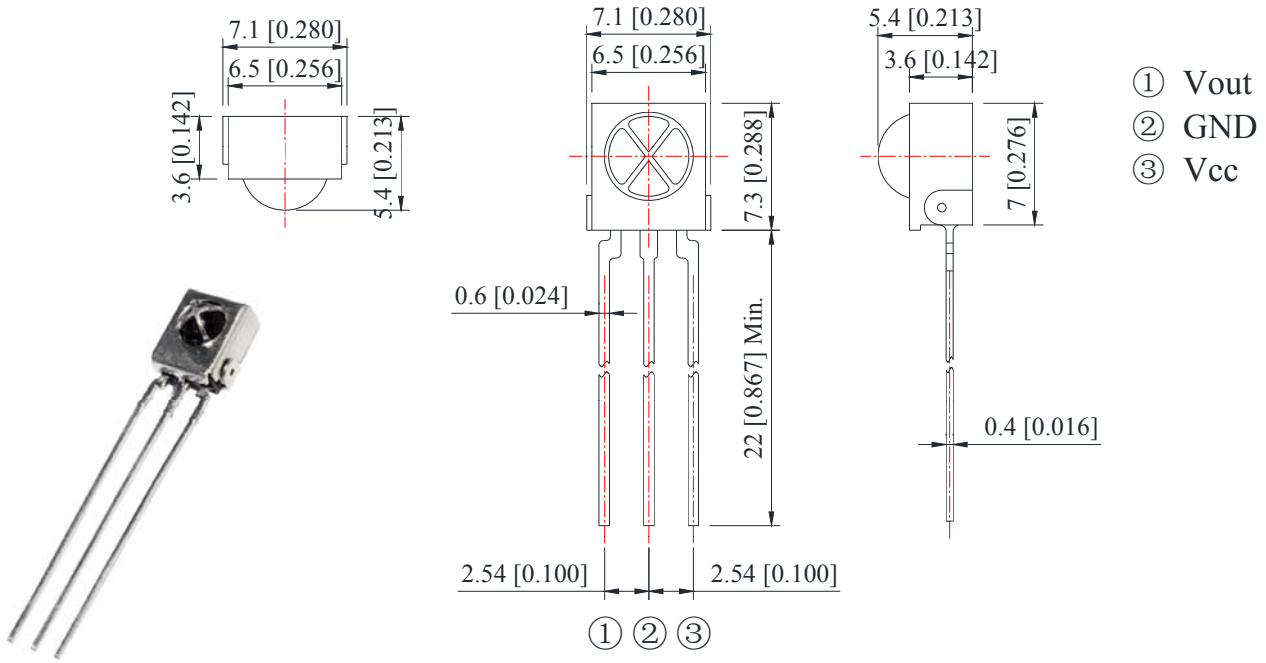

M338S	38	5.00	1.30	14	90

Infrared Remote Control Receiver Module (IRM)

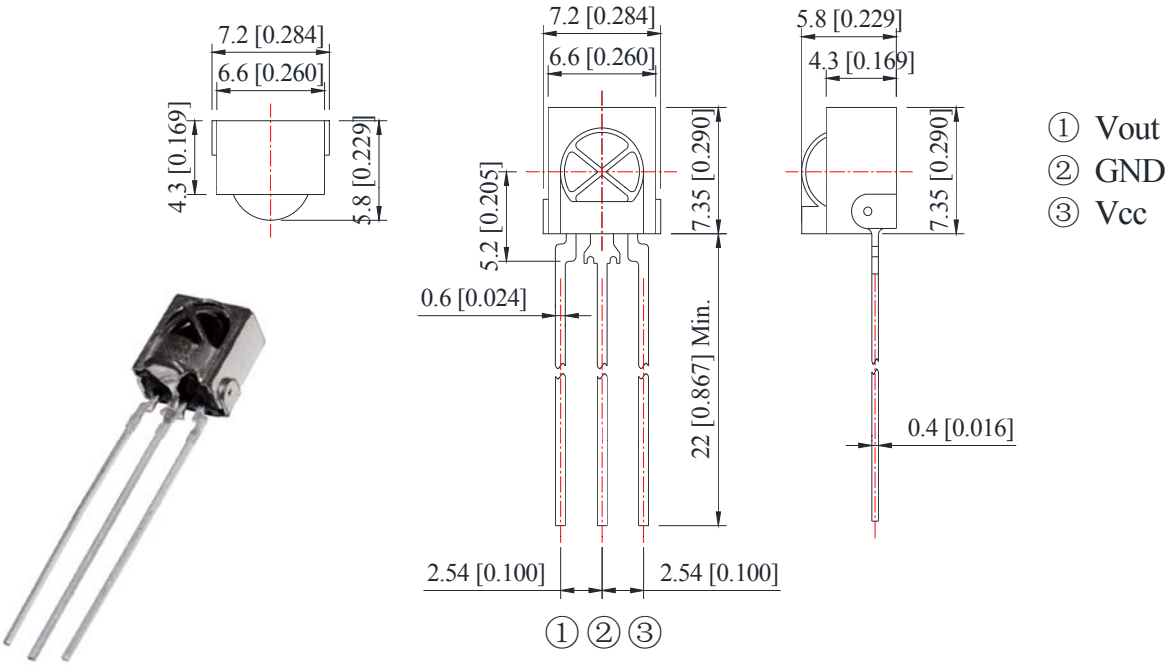

M138S-2-M2	38	5.00	1.30	14	90

Luckylight

Part Number	B.P.F. Center Frequency	Supply Voltage Typ. (V)	Supply Current Typ. (mA)	Transmission Distance Min. (m)	Angle θh (°)

Infrared Remote Control Receiver Module (IRM)

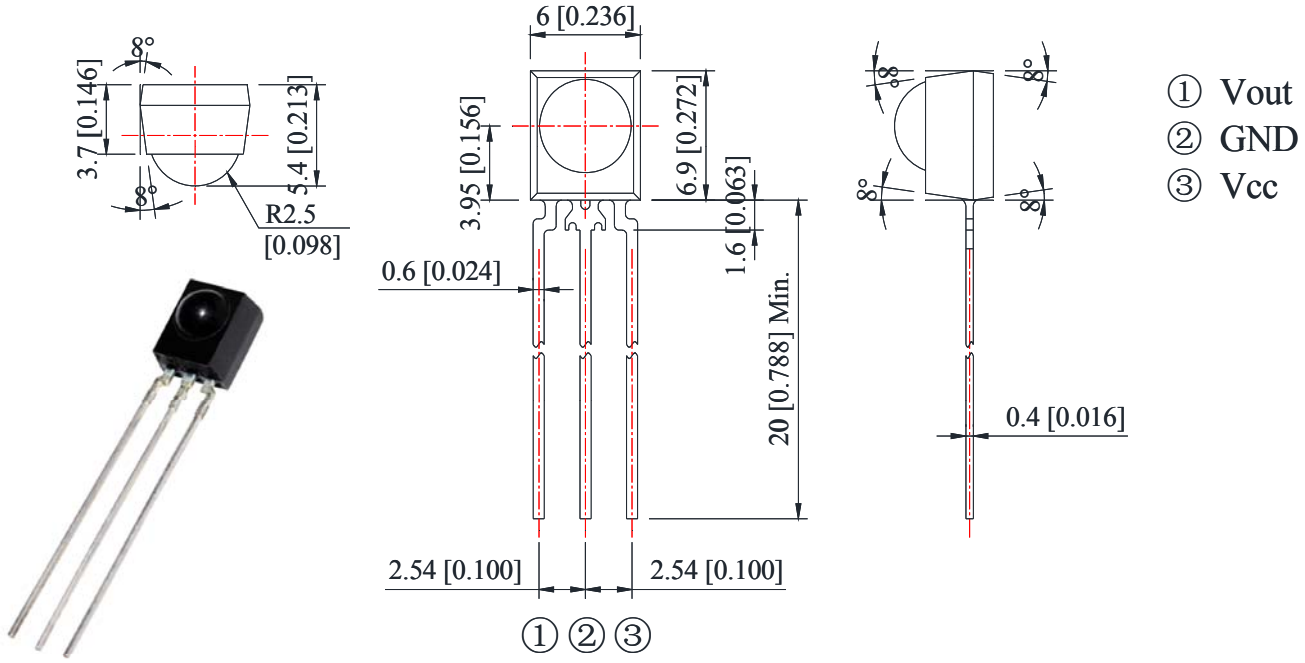

M6056	56	5.00	1.30	14	90

1. All dimensions are in millimeters (inches).
2. Tolerance is ±0.25mm (.010") unless otherwise noted.
3. Specifications are subject to change without notice.

APPLICATION NOTES

Application Notes for Through-hole LED

Storage Conditions

1. Avoid continued exposure to the condensing moisture environment and keep the product away from rapid transitions in ambient temperature.

2. LEDs should be stored with temperature ≦ 30°C and relative humidity <70%.

3. Product in the original sealed package is recommended to be assembled within 72 hours of opening. Product in opened package for more than a week should be baked for 30 (+10/-0) hours at 85 ~ 100°C.

4. The LED lead-frame surface is plated with silver. When the lead-frame is stored under high-humidity environments, or exposed to certain chemical elements or gases, the surface may become discolored. Please maintain the cleanliness of the storage environment.

Lead Forming & Assembly

1. During lead forming, the leads should be bent at a point at least 2.0mm from the base of LED lens. Do not use the base of the lead frame as a fulcrum during forming. Lead forming must be done before soldering, at normal temperature. During assembly on PCB, use minimum clinch force possible to avoid excessive mechanical stress.

2. Pay attention to the polarity of the LEDs to prevent wrong assembly. Keep distance between LEDs and other heating devices. LED working condition should not exceed the prescribed limit.

3. Make sure the PIN is not deformed during LED installation.

4. When deciding to install the LEDs through hole, calculate the dimensions between the PCB and tolerance of the hole spacing well to prevent the lead frame burdening too much excessive pressure.

5. It is not recommended to assemble LEDs of different color or intensity bins together, as there may be perceivable color or intensity variation. Each bag contains parts from the same bin code. The bin code is printed on the bag's label as below.

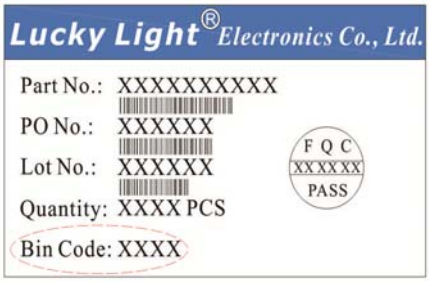

APPLICATION NOTES

Application Notes for Through-hole LED

LED Mounting Method

1. The lead pitch of the LED must match the pitch of the mounting holes on the PCB during component placement. Lead-forming may be required to insure the lead pitch matches the hole pitch. Refer to the figure below for proper lead forming procedures. (Fig. 1)

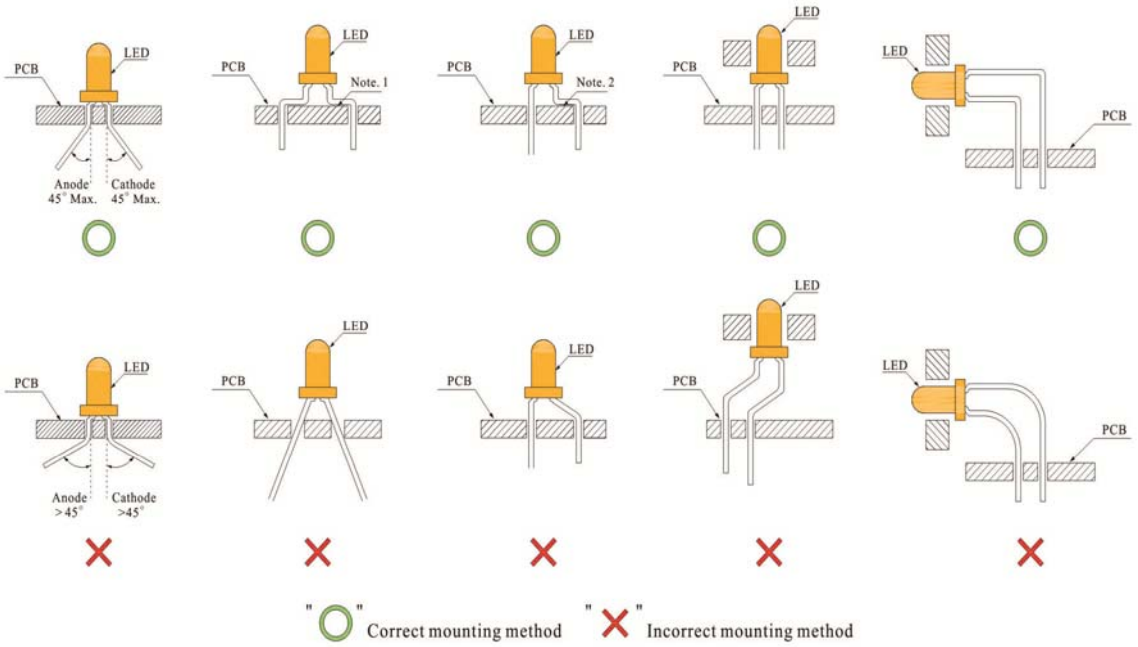

Note 1~2 : Do not route PCB trace in the contact area between the leadframe and the PCB to prevent short-circuits.

Fig. 1

2. When soldering wires to the LED, each wire joint should be separately insulated with heat-shrink tube to prevent short-circuit contact. Do not bundle both wires in one heat shrink tube to avoid pinching the LED leads. Pinching stress on the LED leads may damage the internal structures and cause failure. (Fig. 2)

Fig. 2

3. Use stand-offs (Fig. 3) or spacers (Fig. 4) to securely position the LED above the PCB.

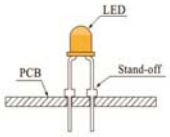

Fig. 3

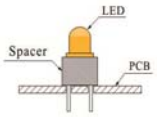

Fig. 4

APPLICATION NOTES

Application Notes for Through-hole LED

Lead Forming Procedures

1. Maintain a minimum of 3mm clearance between the base of the LED lens and the first lead bend. (Fig. 5 and 6)

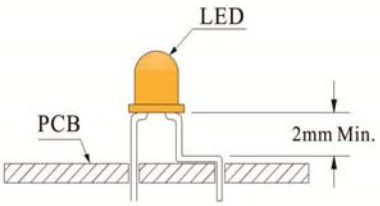

Fig. 5

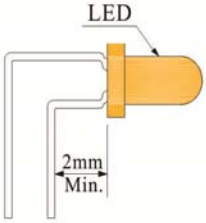

Fig. 6

2. Lead-forming or bending must be performed before soldering, never during or after Soldering.

3. Do not stress the LED lens during lead-forming in order to prevent fractures in the epoxy lens and damage the internal structures.

4. During lead forming, use tools or jigs to hold the leads securely so that the bending force will not be transmitted to the LED lens and its internal structures. Do not perform lead forming once the component has been mounted onto the PCB. (Fig. 7)

5. Do not bend the leads more than twice. (Fig. 8)

6. After soldering or other high-temperature assembly, allow the LED to cool down to 50°C before applying outside force (Fig. 9). In general, avoid placing excess force on the LED to avoid damage. For any questions please consult with Luckylight representative for proper handling procedures.

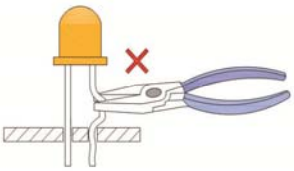

Fig. 7

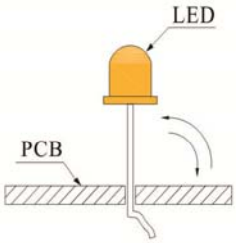

Fig. 8

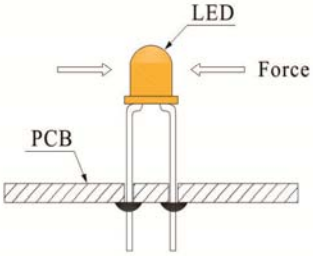

Fig. 9

APPLICATION NOTES

Application Notes for Through-hole LED

Soldering

1. We recommend manual soldering operations only for repair and rework purposes. The soldering iron should not exceed 30W in power. The maximum soldering temperature is 300°C for Pb-Sn solder and 350°C for lead-free solder for normal lamps and displays. For blue (typical λd 465 nm), blue-green (typical λd 525 nm) and all white LEDs, the maximum soldering iron temperature is 280°C. Do not place the soldering iron on the component for more than 3 seconds.

2. The tip of the soldering iron should never touch the lens epoxy.

3. Do not apply stress to the leads when the component is heated above 85°C, otherwise internal wire bonds may be damaged.

4. After soldering, allow at least three minutes for the component to cool down to room temperature before further operations.

5. Through-hole LEDs are incompatible with reflow soldering.

6. If the LED will undergo multiple soldering passes or face other processes where the part may be subjected to intense heat, please check with Luckylight for compatibility.

7. In case of misalignment and re-position is required, do not force the LED while applying a soldering iron. The part should be first de-soldered, and then the LED may be re-soldered with the aid of a holder to place it correctly (as shown below).

Recommended Soldering Profile for Luckylight Through-Hole Products

Iron soldering (with 1.5mm Iron tip)

Temperature of soldering iron	Maximum soldering time	Distance from solder joint to package
≤300℃	3s	>2mm
≤300℃	5s	>5mm

Dip Soldering / Wave Soldering

Temperature of soldering iron	Maximum soldering time	Distance from solder joint to package
≤260℃	3s	>2mm
≤260℃	5s	>5mm

Lead-Free Wave Soldering Profile

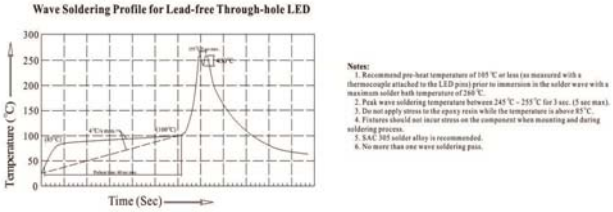

Wave Soldering Profile with Pb-Sn Solder

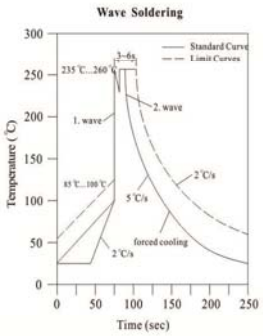

APPLICATION NOTES

Application Notes for Through-hole LED

Drive Method

1. An LED is a current-operated device. In order to ensure intensity uniformity on multiple LEDs connected in parallel in an application, it is recommended that a current limiting resistor be incorporated in the drive circuit, in series with each LED as shown in Circuit A below.

(A) Recommended circuit

(B) The brightness of each LED might appear different due to the differences in the I-V characteristics of those LEDs.

Repairing

1. Repair should not be done after the LEDs have been soldered. When repairing is unavoidable, a double-head soldering iron should be used. It should be confirmed beforehand whether the characteristics of the LEDs will or will not be damaged by repairing.

ESD (Electrostatic Discharge)

Static Electricity or power surge will damage the LED. Suggestions to prevent ESD damage:

1. Use a conductive wrist band or anti- electrostatic glove when handling these LEDs.

2. All devices, equipment, and machinery must be properly grounded.

3. Work tables, storage racks, etc. should be properly grounded.

4. Use ion blower to neutralize the static charge which might have built up on surface of the LEDs plastic lens as a result of friction between LEDs during storage and handing.

ESD-damaged LEDs will exhibit abnormal characteristics such as high reverse leakage current, low forward voltage, or “no light up” at low currents.

To verify for ESD damage, check for “light up” and VF of the suspect LEDs at low currents. The VF of “good” LEDs should be >2.0V@0.1mA for InGaN product and >1.4V@0.1mA for AlInGaP product.

Others

1. The information included in this document reflects representative usage scenarios and is intended for technical reference only.

2. The part number, type, and specifications mentioned in this document are subject to future change and improvement without notice. Before production usage customer should refer to the latest datasheet for the updated specifications.

3. When using the products referenced in this document, please make sure the product is being operated within the environmental and electrical limits specified in the datasheet. If customer usage exceeds the specified limits, Luckylight will not be responsible for any subsequent issues.

4. The LEDs described here are intended to be used for ordinary electronic equipment (such as office equipment, communication equipment and household applications). Consult Luckylight's Sales in advance for information on applications in which exceptional reliability is required, particularly when the failure or malfunction of the LEDs may directly jeopardize life or health, such as in aviation, transportation, traffic control equipment, medical and life support systems and safety devices.

APPLICATION NOTES

Application Notes for SMD LED

Application

The LEDs described here are intended to be used for ordinary electronic equipment (such as office equipment, communication equipment and household applications). Consult Luckylight's sales team in advance for information on applications in which exceptional reliability is required, particularly when the failure or malfunction of the LEDs may directly jeopardize life or health (such as in aviation, transportation, traffic control equipment, medical and life support systems and safety devices).

Handling Precautions

1. Handle the component along the side surfaces by using forceps or appropriate tools.

2. Do not directly touch or handle the epoxy resin / silicone lens surface. It may damage the internal circuitry.

3. Do not stack together assembled PCBs containing exposed LEDs. Impact may scratch the epoxy resin / silicone lens or damage the internal circuitry.

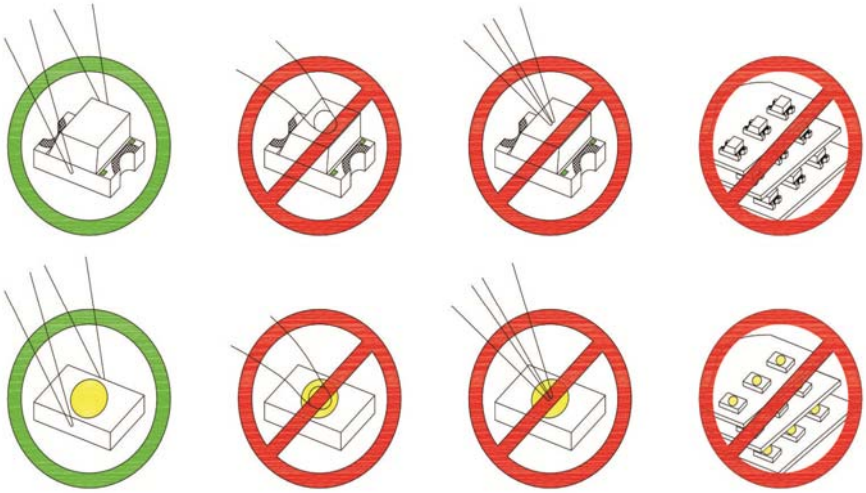

Storage

1. The package is sealed:
The LEDs should be stored at 30°C or less and 60%RH or less. And the LEDs are limited to use within one year, while the LEDs is packed in moisture-proof package with the desiccants inside.

2. The package is opened:
The storage ambient for the LEDs should not exceed 30°C temperature or 60% relative humidity. It is recommended that LEDs out of their original packaging are IR-reflowed within 24 hours. For extended storage out of their original packaging, it is recommended that the LEDs be stored in a sealed container with appropriate desiccant, or in a desiccator with nitrogen ambient. LEDs stored out of their original packaging for more than 48 hours should be baked at about 60 deg C for at least 20 hours before solder assembly.

3. Do not open moisture proof bag before the products are ready to use.

APPLICATION NOTES

Application Notes for SMD LED

Soldering Condition

Because different board designs use different number and types of devices, solder pastes, reflow ovens, and circuit boards, no single temperature profile works for all possible combinations. However, you can successfully mount your packages to the PCB by following the proper guidelines and PCB-specific characterization. You should adhere to the JEDEC profile limits as well as specifications and recommendations from the solder paste manufacturer to avoid damaging the device and create a reliable solder joint.

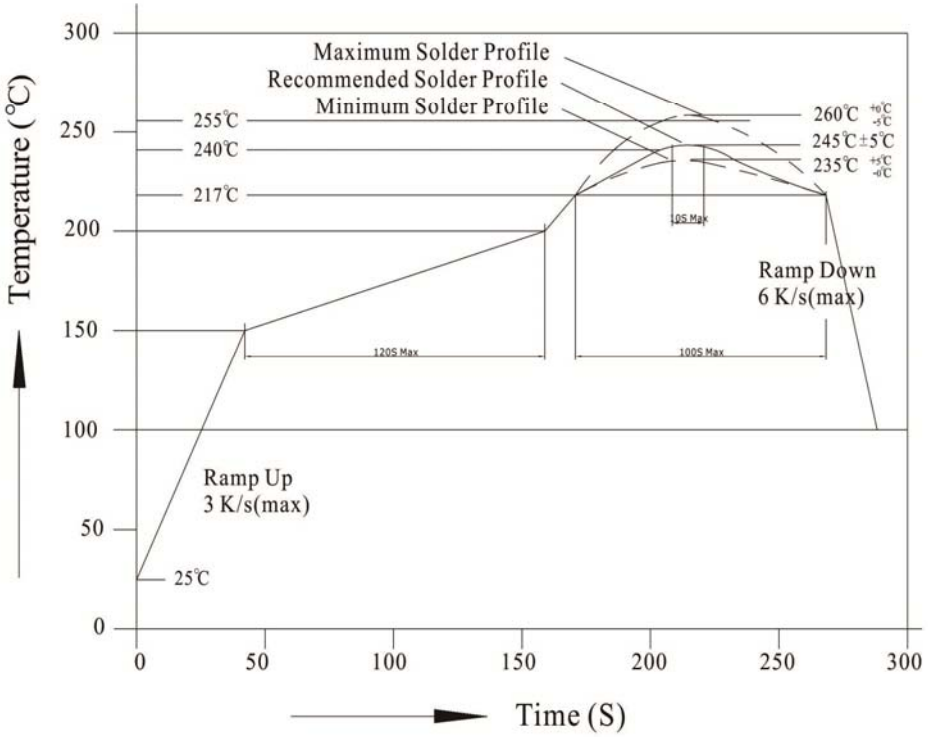

1. Recommended soldering conditions:

Reflow Soldering		Soldering Iron	
Pre-heat	150~200°C	Temperature	300°C Max.
Pre-heat Time	120Sec. Max.	Soldering Time	3Sec. Max.
Peak Temperature	260°C Max.		(One Time Only)
Soldering Time	10Sec. Max. (Max. two times)		

2. Do not apply stress to the leads when the component is heated above 85°C, otherwise internal wire bonds may be damaged.

3. SMD LED products must be mounted according to specified soldering pad patterns. Refer to the product datasheet for details. Solder paste must be evenly applied to each soldering pad to insure proper bonding and positioning of the component.

4. After soldering, allow at least three minutes for the component to cool to room temperature before further operations.

APPLICATION NOTES

Application Notes for SMD LED

5. Manual soldering is not recommended unless necessary such as when repair or rework is required.

6. Soldering iron power shall not exceed 30W. The recommended maximum temperature for lead and unlead soldering is 300°C and 350°C respectively. For blue (typical λd 465nm), blue-green (typical λd 525nm), and all white LEDs, the maximum soldering iron temperature is 280°C. Do not place the soldering iron on the component for more than 3 seconds.

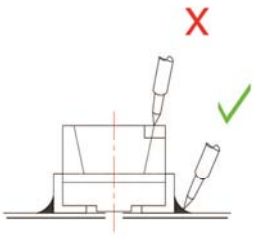

The tip of the soldering iron should never touch the LED body

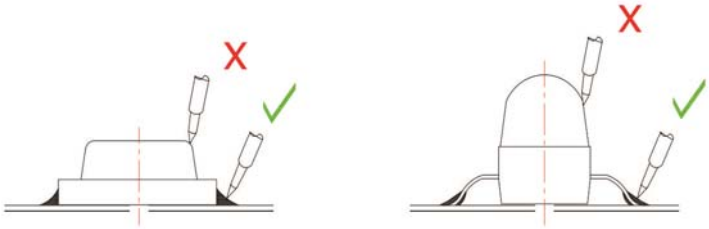

The tip of the soldering iron should never touch the lens

7. For the rework of SMD LED without side surface leads, refer to QFN rework methods. Special attention should be made for proper thermal isolation of surrounding electronic components.

Drive Method

1. LED is a current-operated device. In order to ensure intensity uniformity on multiple LEDs connected in parallel in an application, it is recommended that a current limiting resistor be incorporated in the drive circuit, in series with each LED as shown in Circuit A below.

Circuit model A

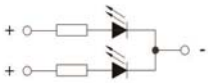

Circuit model B

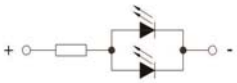

a. Recommended circuit.

b. The brightness of each LED might appear different due to the differences in the I-V characteristics of those LEDs.

APPLICATION NOTES

Application Notes for SMD LED

ESD (Electrostatic Discharge)

Static Electricity or power surge will damage the LED. Suggestions to prevent ESD damage:

· Use of a conductive wrist band or anti-electrostatic glove when handling these LEDs.
· All devices, equipment, and machinery must be properly grounded.
· Work tables, storage racks, etc. should be properly grounded.
· Use ion blower to neutralize the static charge which might have built up on surface of the LED's plastic lens as a result of friction between LEDs during storage and handling.

ESD-damaged LEDs will exhibit abnormal characteristics such as high reverse leakage current, low forward voltage, or "no lightup" at low currents. To verify for ESD damage, check for "lightup" and Vf of the suspect LEDs at low currents. The Vf of "good" LEDs should be >2.0V@0.1mA for InGaN product and >1.4V@0.1mA for AlInGaP product.

Disclaimer

PLEASE CAREFULLY READ THE FOLLOWING TERMS AND CONDITIONS BEFORE USING THE INFORMATION SHOWN HEREIN. IF YOU DO NOT AGREE WITH ANY OF THESE TERMS OR CONDITIONS, DONOT USE THE INFORMATION.

The information shown in this document is provided by Luckylight Electronics Co., Ltd, and it reflects representative usage scenarios and is intended for technical reference only.

Luckylight may change the information shown herein anytime without notice to users and is not obligated to provide any maintenance (including updates or notifications upon changes) or support related to information. Before production usage customer should refer to the latest datasheet for the updated specifications.

Luckylight makes no warranty, representation or guarantee regarding the suitability of the products for any particular purpose or the continuing production of any product. To the maximum extent permitted by applicable law, Luckylight disclaims (i) any and all liability arising out of the application or use of any product, (ii) any and all liability, including without limitation special, consequential or incidental damages, and (iii) any and all implied warranties, including warranties of fitness for particular purpose, non-infringement and merchantability.

Statements regarding the suitability of products for certain types of applications are based on Luckylight's knowledge of typical requirements that are often placed on Luckylight products in generic applications. Such statements are not binding statements about the suitability of products for a particular application. It is the customer's responsibility to validate that a particular product with the properties described in the product specification is suitable for use in a particular application. Parameters provided in datasheets and / or specifications may vary in different applications and performance may vary over time. All operating parameters, including typical parameters, must be validated for each customer application by the customer's technical experts. Product specifications do not expand or otherwise modify Luckylight's terms and conditions of purchase, including but not limited to the warranty expressed therein.

Except as expressly indicated in writing, Luckylight products are not designed for use in medical, life-saving, or life-sustaining applications or for any other application in which the failure of the Luckylight product could result in personal injury or death. Customers using or selling Luckylight products not expressly indicated for use in such applications do so at their own risk. Please contact authorized Luckylight personnel to obtain written terms and conditions regarding products designed for such applications.

APPLICATION NOTES

Application Notes For LED Display

Terms and Conditions for the Usage of This Document

1. The information included in this document reflects representative usage scenarios and is intended for technical reference only.
2. The part number, type, and specifications mentioned in this document are subject to future change and improvement without notice. Before production usage customer should refer to the latest datasheet for the updated specifications.
3. When using the products referenced in this document, please make sure the product is being operated within the environmental and electrical limits specified in the datasheet. If customer usage exceeds the specified limits, Luckylight will not be responsible for any subsequent issues.
4. The information in this document applies to typical usage in consumer electronics applications. If customer's application has special reliability requirements or have life-threatening liabilities, such as automotive or medical usage, please consult with Luckylight representative for further assistance.
5. The contents and information of this document may not be reproduced or re-transmitted without permission by Luckylight.
6. Over-current-proof
Customer must apply resistors for protection, otherwise slight voltage shift will cause big current change (Burn out will happen).
7. Storage
   7.1 Before opening the package, the LEDs should be kept at 30℃ or less and 80%RH or less.
   7.2 The LEDs should be used within a year.
   7.3 After opening the package, the LEDs should be kept at 30℃ or less and 60%RH or less.

Through-hole Display Mounting Method

1. Lead Forming:
   1.1 Do not bend the component leads by hand without proper tools.
   2.2 The leads should be bent by clinching the upper part of the lead firmly such that the bending force Is not exerted on the plastic body.

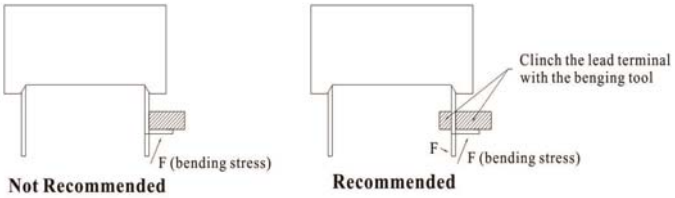

2. Installation:
   2.1 The installation process should not apply stress to the lead terminals.
   2.2 When inserting for assembly, ensure the terminal pitch matches the substrate board's hole pitch to prevent spreading or pinching the lead terminals.

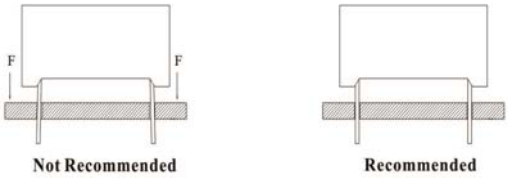

   2.3 The component shall be placed at least 5mm from edge of PCB to avoid damage caused excessive heat during wave soldering.

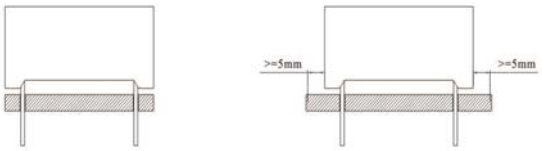

APPLICATION NOTES

Application Notes For LED Display

Soldering General Notes

Recommended Wave Soldering Profiles

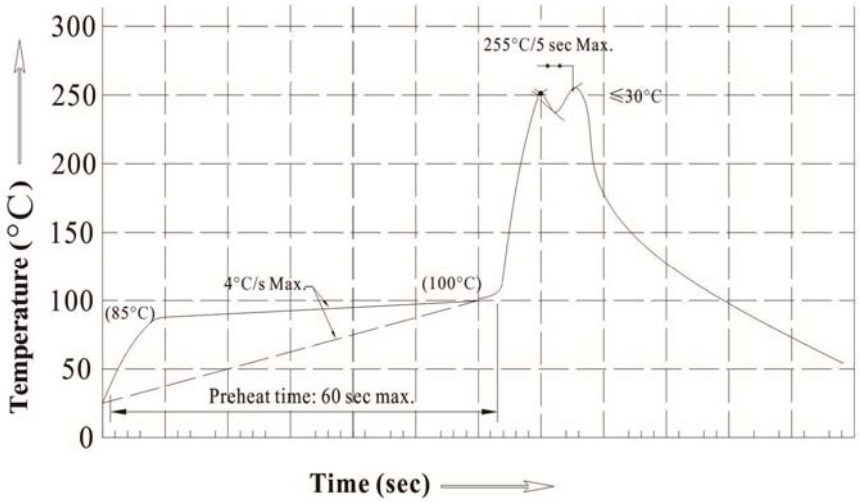

Notes:

1. Recommend pre-heat temperature of 105°C or less (as measured with a thermocouple attached to the LED pins) prior to immersion in the solder wave with a maximum solder bath temperature of 260°C.
2. Peak wave soldering temperature between 245°C~255°C for 3 sec (5 sec max).
3. Do not apply stress to the epoxy resin while the temperature is above 85°C.
4. Fixtures should not incur stress on the component when mounting and during soldering process.
5. SAC 305 solder alloy is recommended.
6. No more than one wave soldering pass.
7. During wave soldering, the PCB top-surface temperature should be kept below 105°C.
8. Through-hole displays are incompatible with reflow soldering.
9. If components will undergo multiple soldering processes, or other processes where the components may be subjected to intense heat, please check with Luckylight for compatibility.

Cleaning

1. Mild "no-clean" fluxes are recommended for use in soldering.
2. If cleaning is required, Luckylight recommends to wash components with water only.
Do not use harsh organic solvents for cleaning because they may damage the plastic parts.
3. The cleaning process should take place at room temperature and the devices should not be washed for more than one minute.
4. When water is used in the cleaning process, immediately remove excess moisture from the component with forced-air drying afterwards.

Circuit Design Notes

1. Protective current-limiting resistors may be necessary to operate the LEDs within the specified range.
2. LEDs mounted in parallel should each be placed in series with its own current-limiting resistor.

Recommended Set-Up

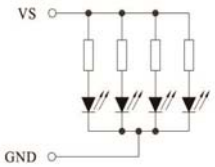

Invalid Set-Up

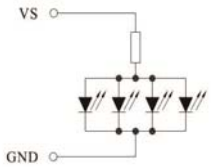

APPLICATION NOTES

Application Notes For LED Display

3. The driving circuit should be designed to protect the LED against reverse voltages and transient voltage spikes when the circuit is powered up or shut down.
4. The safe operating current should be chosen after considering the maximum ambient temperature of the operating environment.
5. Prolonged reverse bias should be avoided, as it could cause metal migration, leading to an increase in leakage current or causing a short circuit.

Using Conditions

1. Recommend to use the display under constant current conditions, and brightness uneven phenomenon may happen if used under constant voltage conditions.
2. Make sure the input current and input voltage are correct for each segment and decimal dot, a current-limiting resistance is needed for each segment and decimal dot too.
3. Keep the products out of corrosive atmosphere.
4. All assembly and testing equipments should be with well ground connection.
5. Input current: dynamic current 3-10mA per segment or decimal dot.
6. ESD preventive measures are needed for blue, pure-green and white emitted color Displays.
7. Don't put heavy articles on the surface of displays to avoid surface ink peel off.
8. Please avoid to contact the Bin-code area when picking up the displays, otherwise the sweet may caused Bin-code vague.
9. Don't crash the display with other articals or drop on the ground to avoid damages during picking up.

ISO 9001 Registered

ISO 14001 Registered

RoHS Registered

UKAS MANAGEMENT SYSTEMS 10727

Luckylight

Lucky Light Electronics Co., Ltd.

15/F, Cooperative Finance Bldg.,
Shennan East Road, Luohu District, Shenzhen, China.
Tel: +86 (755) 2518 8965
+86 (755) 2518 8961
E-mail: sales@luckylight.cn
https://www.luckylight.cn

Production Center:

Building U6, Liandong U Valley, China-Korea
(Huizhou) Industrial Park, Guangdong, China.
Tel: +86 (752) 389 2588
E-mail: support@luckylight.cn

Website QR Code