R5050W-WXH-QXX

5.2x5.0mm, 0.5w Mid-power White LED

5050 Surface Mount PLCC-6 LED

Technical Data Sheet

Features:

- PLCC-6 package
- Mid power LED type
- Wide viewing angle
- Very long operating life
- Designed for high current operation
- Suitable for automatic placement equipment
- Suitable for vapor-phase reflow, Infrared reflow and wave solder processes
- Available on tape and reel (12mm Tape)
- The product itself will remain within RoHS compliant Version

Descriptions:

- The R5050 series is available in soft red, orange, yellow, green, blue and white. Due to the package design, the LED has wide viewing angle and optimized light coupling by inter reflector. This feature makes the SMT TOP LED ideal for light pipe application. The low current requirement makes this device ideal for portable equipment or any other application where power is at a premium.

Applications:

- Reading lights (car, bus, aircraft).
- Bollards/Security/Garden.
- Automotive rear combination lamps.
- Indoor/Outdoor Commercial and Residential Architectural.
- Edge_ lit signs (Exit, point of sale).
- LCD Backlights/Light Guides.

Copyright © 2017 Luckylight All Rights Reserved

Device Selection Guide:

Part No.	Emitting Color
R5050W-W2H-QXX	Cool White
R5050W-W5H-QXX	Neutral White
R5050W-W6H-QXX	Warm White

Package Dimension:

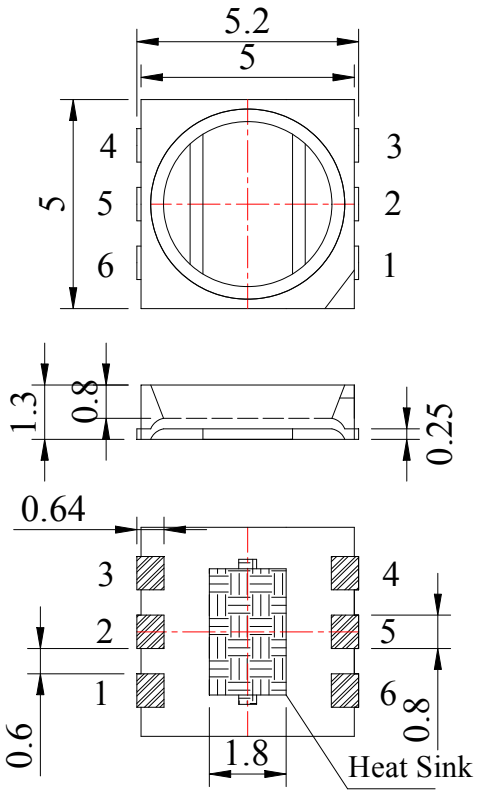

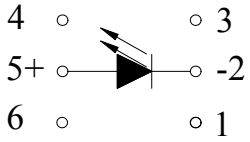

Polarity

Recommended Soldering Pad Dimensions

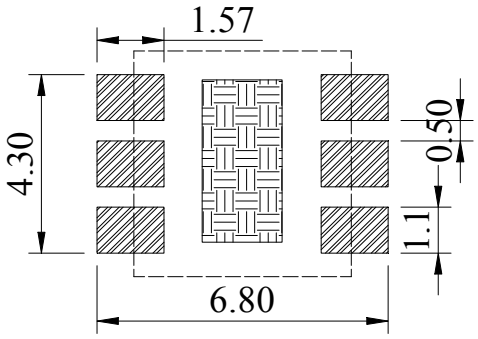

Notes:

1. All dimensions are in millimeters (inches).
2. Tolerance is ± 0.25 mm (.010″) unless otherwise noted.

Copyright © 2017 Luckylight All Rights Reserved

Absolute Maximum Ratings at Ta=25℃

Parameters	Symbol	Max	Unit
Power Dissipation	Pd	0.5	W
Peak Forward Current[(a)]	IFP	400	mA
DC Forward Current	IF	150	mA
Reverse Voltage	VR	5	V
Electrostatic Discharge (HBM)	ESD	1000	V
Operating Temperature Range	Topr	-40℃ to +85℃	
Storage Temperature Range	Tstg	-40℃ to +85℃	
Soldering Temperature	Tsld	260℃ for 5 Seconds	

Notes:
a. Duty Factor = 10%, Frequency = 1 kHz

Copyright © 2017 Luckylight All Rights Reserved

Electrical Optical Characteristics at Ta=25℃

Parameters	Symbol	Emitting Color	Min.	Typ.	Max.	Unit	Test Condition
Luminous Flux [a]	Φv	W2H-Q50	50	55	---	Lm	IF=150mA
		W2H-Q55	55	60	---		
		W2H-Q60	60	65	---		
		W5H-Q50	50	55	---		
		W5H-Q55	55	60	---		
		W5H-Q60	60	65	---		
		W6H-Q50	50	55	---		
		W6H-Q55	55	60	---		
		W6H-Q60	60	65	---		
Viewing Angle [b]	2θ1/2		---	120	---	Deg	IF=150mA
Chromaticity Coordinates[c]	X	W2H-QXX	---	0.31	---		IF=150mA
		W5H-QXX	---	0.37	---		
		W6H-QXX	---	0.43	---		
	Y	W2H-QXX	---	0.32	---		
		W5H-QXX	---	0.37	---		
		W6H-QXX	---	0.40	---		
Color Temperature	CCT	W2H-QXX	5000	6500	---	K	IF=150mA
		W5H-QXX	3800	4500	5000		
		W6H-QXX	2600	3000	3800		
Color Rendering Index	CRI	W2H-QXX	---	73	---	Ra	IF=150mA
		W5H-QXX	---	73	---		
		W6H-QXX	---	73	---		
Forward Voltage	VF	W2H-QXX	2.80	3.20	3.60	V	IF=150mA
		W5H-QXX	2.80	3.20	3.60		
		W6H-QXX	2.80	3.20	3.60		
Reverse Current	IR	W2H-QXX	---	---	10	μA	VR=5V
		W5H-QXX	---	---	10		
		W6H-QXX	---	---	10		

Notes:

a. Luminous flux measurement tolerance: ±10%.

b. Wavelength measurement tolerance: ±1nm

c. Forward voltage measurement tolerance: ±0.1V

Copyright © 2017 Luckylight All Rights Reserved

Typical Electrical / Optical Characteristics Curves
(25℃ Ambient Temperature Unless Otherwise Noted)

Spectrum Distribution

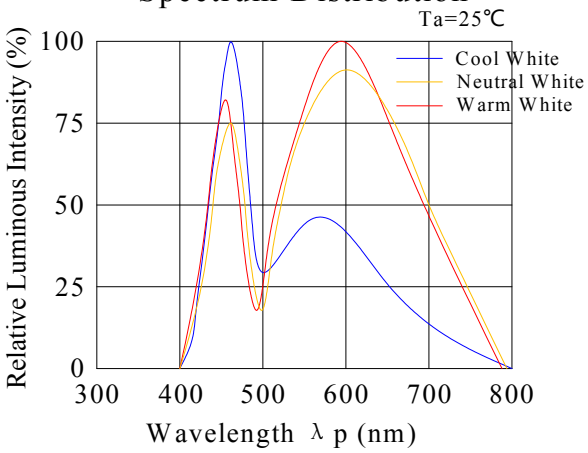

Forward Current & Forward Voltage

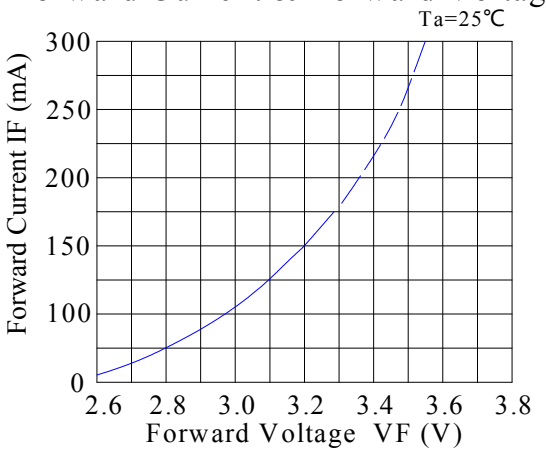

Luminous Intensity & Ambient Temperature

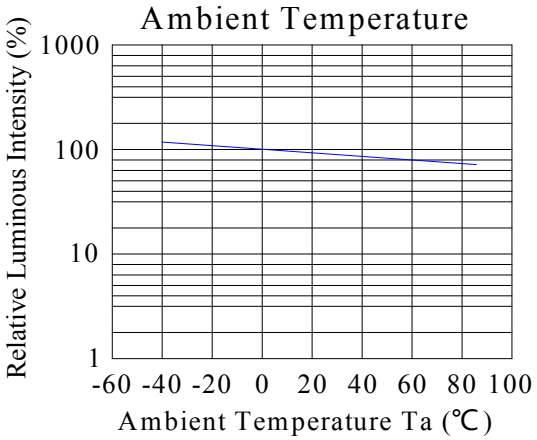

Luminous Intensity & Forward Current

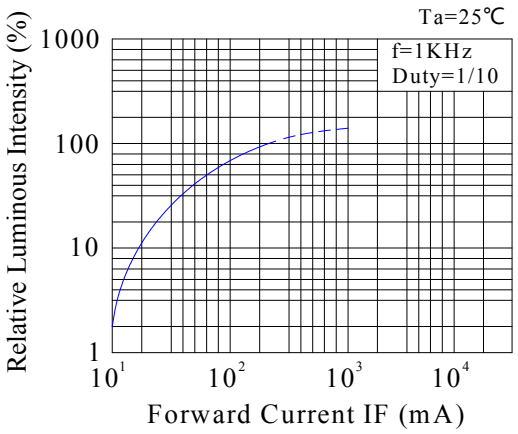

Forward Current Derating Curve

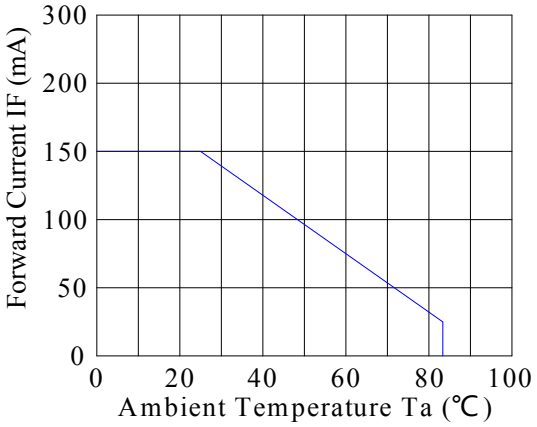

Radiation Diagram

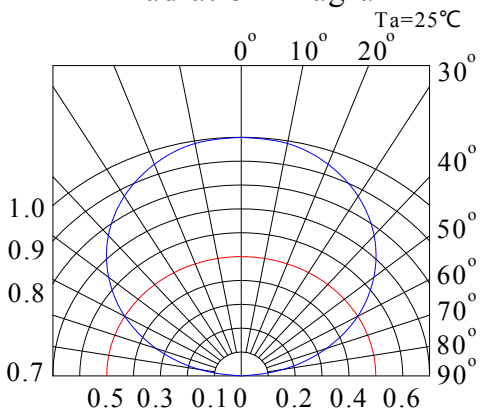

Copyright © 2017 Luckylight All Rights Reserved

CIE Chromaticity Diagram:

Cool White:

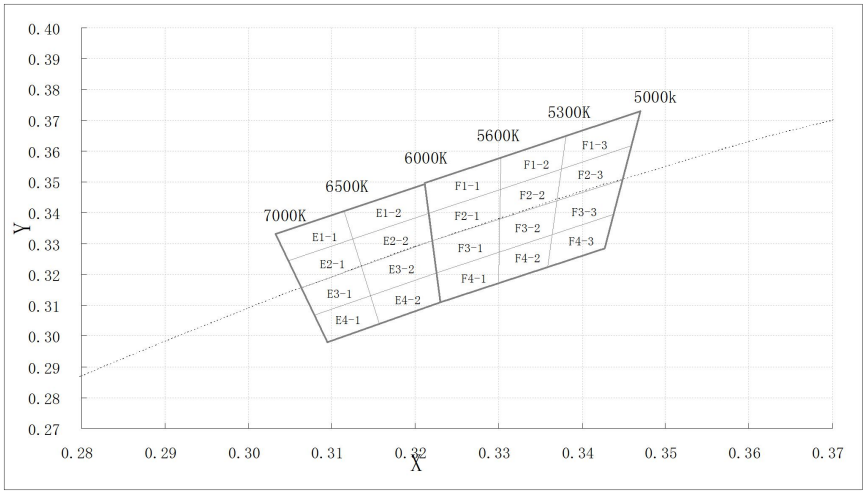

Chromaticity Coordinates Specifications for Bin Rank (Ta=25℃):

Bin Code	Left x	Left y	Top x	Top y	Right x	Right y	Bottom x	Bottom y
E1-1	0.305	0.324	0.313	0.331	0.312	0.341	0.303	0.333
E2-1	0.306	0.316	0.314	0.323	0.313	0.331	0.305	0.324
E3-1	0.308	0.307	0.315	0.313	0.314	0.323	0.306	0.316
E4-1	0.310	0.298	0.316	0.304	0.315	0.313	0.308	0.307
E1-2	0.313	0.331	0.323	0.340	0.323	0.349	0.312	0.341
E2-2	0.314	0.323	0.323	0.330	0.323	0.340	0.313	0.331
E3-2	0.315	0.313	0.323	0.321	0.323	0.330	0.314	0.323
E4-2	0.316	0.304	0.323	0.311	0.323	0.321	0.315	0.313
F1-1	0.323	0.340	0.330	0.347	0.330	0.357	0.323	0.349
F2-1	0.323	0.330	0.330	0.337	0.330	0.347	0.323	0.340
F3-1	0.323	0.321	0.330	0.327	0.330	0.337	0.323	0.330
F4-1	0.323	0.311	0.330	0.317	0.330	0.327	0.323	0.321
F1-2	0.330	0.347	0.337	0.354	0.338	0.365	0.330	0.357
F2-2	0.330	0.337	0.337	0.343	0.337	0.354	0.330	0.347
F3-2	0.330	0.327	0.337	0.333	0.337	0.343	0.330	0.337
F4-2	0.330	0.317	0.337	0.322	0.337	0.333	0.330	0.327
F1-3	0.337	0.354	0.346	0.362	0.347	0.373	0.338	0.365
F2-3	0.337	0.343	0.345	0.351	0.346	0.362	0.337	0.354
F3-3	0.337	0.333	0.344	0.340	0.345	0.351	0.337	0.343
F4-3	0.337	0.322	0.343	0.328	0.344	0.340	0.337	0.333

Copyright © 2017 Luckylight All Rights Reserved

Neutral White:

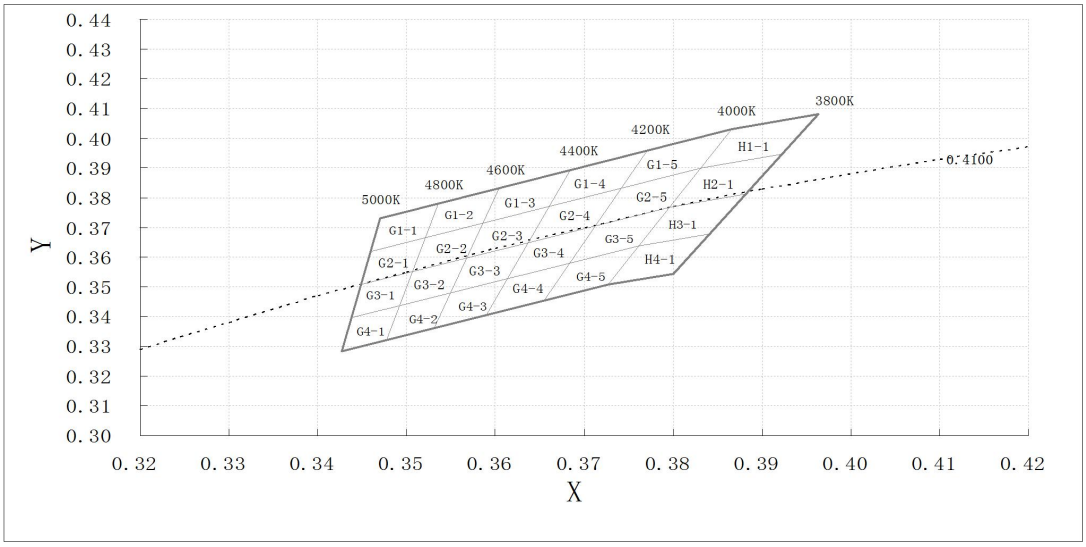

Chromaticity Coordinates Specifications for Bin Rank:

Bin Code	Left x	Left y	Top x	Top y	Right x	Right y	Bottom x	Bottom y
G1-1	0.346	0.362	0.352	0.366	0.353	0.378	0.347	0.373
G2-1	0.345	0.351	0.351	0.356	0.352	0.366	0.346	0.362
G3-1	0.344	0.340	0.350	0.344	0.351	0.356	0.345	0.351
G4-1	0.343	0.328	0.348	0.332	0.350	0.344	0.344	0.340
G1-2	0.352	0.366	0.359	0.371	0.360	0.383	0.353	0.378
G2-2	0.351	0.356	0.357	0.359	0.359	0.371	0.352	0.366
G3-2	0.350	0.344	0.355	0.348	0.357	0.359	0.351	0.356
G4-2	0.348	0.332	0.353	0.336	0.355	0.348	0.350	0.344
G1-3	0.359	0.371	0.366	0.377	0.368	0.389	0.360	0.383
G2-3	0.357	0.359	0.364	0.365	0.366	0.377	0.359	0.371
G3-3	0.355	0.348	0.361	0.352	0.364	0.365	0.357	0.359
G4-3	0.353	0.336	0.359	0.340	0.361	0.352	0.355	0.348
G1-4	0.366	0.377	0.374	0.383	0.377	0.396	0.368	0.389
G2-4	0.364	0.365	0.371	0.370	0.374	0.383	0.366	0.377
G3-4	0.361	0.352	0.368	0.357	0.371	0.370	0.364	0.365
G4-4	0.359	0.340	0.365	0.345	0.368	0.357	0.361	0.352
G1-5	0.374	0.383	0.384	0.390	0.387	0.403	0.377	0.396
G2-5	0.371	0.370	0.380	0.377	0.384	0.390	0.374	0.383
G3-5	0.368	0.357	0.376	0.363	0.380	0.377	0.371	0.370
G4-5	0.365	0.345	0.373	0.351	0.376	0.363	0.368	0.357
H1-1	0.383	0.390	0.392	0.394	0.396	0.408	0.387	0.403
H2-1	0.380	0.377	0.388	0.381	0.392	0.394	0.383	0.390

Copyright © 2017 Luckylight All Rights Reserved

H3-1	0.376	0.363	0.384	0.367	0.388	0.381	0.380	0.377
H4-1	0.373	0.351	0.380	0.354	0.384	0.367	0.376	0.363

Warm White:

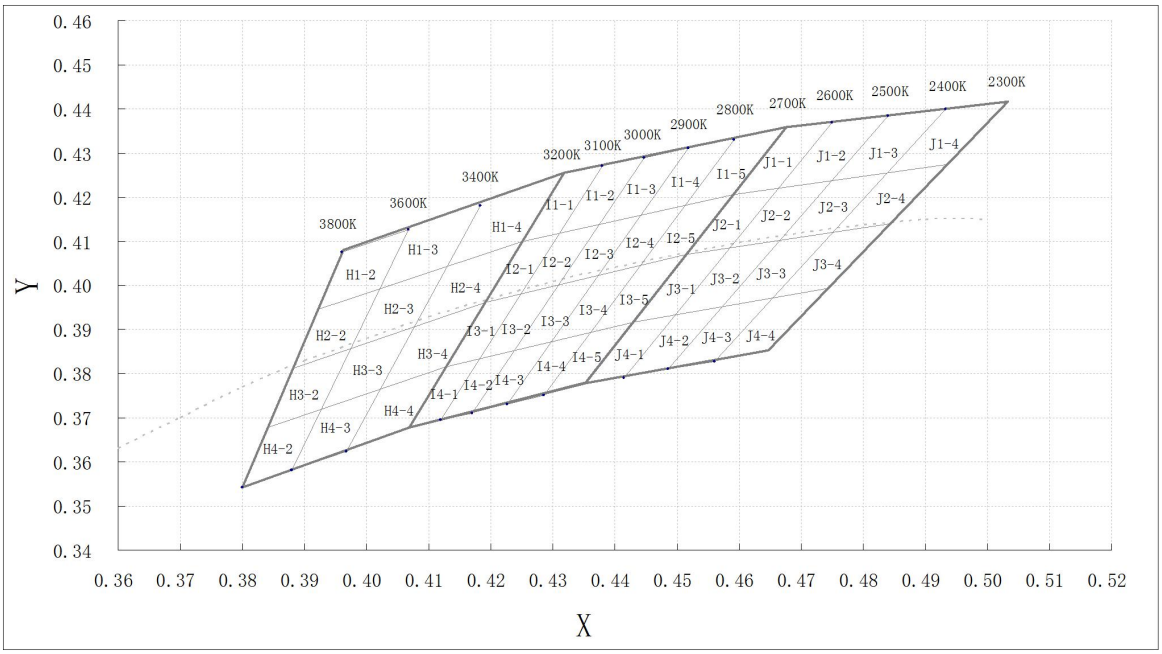

Chromaticity Coordinates Specifications for Bin Rank:

Bin Code	Left x	Left y	Top x	Top y	Right x	Right y	Bottom x	Bottom y
H1-2	0.392	0.394	0.402	0.399	0.407	0.413	0.396	0.408
H2-2	0.388	0.381	0.397	0.386	0.402	0.399	0.392	0.394
H3-2	0.384	0.367	0.393	0.372	0.397	0.386	0.388	0.381
H4-2	0.380	0.354	0.388	0.358	0.393	0.372	0.384	0.367
H1-3	0.402	0.399	0.412	0.403	0.418	0.419	0.407	0.413
H2-3	0.397	0.386	0.407	0.390	0.412	0.403	0.402	0.399
H3-3	0.393	0.372	0.402	0.376	0.407	0.390	0.397	0.386
H4-3	0.388	0.358	0.397	0.362	0.402	0.376	0.393	0.372
H1-4	0.412	0.403	0.425	0.410	0.432	0.426	0.418	0.419
H2-4	0.407	0.390	0.419	0.396	0.425	0.410	0.412	0.403
H3-4	0.402	0.376	0.413	0.382	0.419	0.396	0.407	0.390
H4-4	0.397	0.362	0.407	0.368	0.413	0.382	0.402	0.376
I1-1	0.425	0.410	0.431	0.412	0.438	0.428	0.432	0.426
I2-1	0.419	0.396	0.424	0.398	0.431	0.412	0.425	0.410
I3-1	0.413	0.382	0.418	0.384	0.424	0.398	0.419	0.396
I4-1	0.407	0.368	0.412	0.370	0.418	0.384	0.413	0.382

Copyright © 2017 Luckylight All Rights Reserved

I1-2	0. 431	0. 412	0. 437	0. 414	0. 445	0. 430	0. 438	0. 428
I2-2	0. 424	0. 398	0. 430	0. 400	0. 437	0. 414	0. 431	0. 412
I3-2	0. 418	0. 384	0. 423	0. 385	0. 430	0. 400	0. 424	0. 398
I4-2	0. 412	0. 370	0. 417	0. 372	0. 423	0. 385	0. 418	0. 384
I1-3	0. 437	0. 414	0. 444	0. 416	0. 452	0. 432	0. 445	0. 430
I2-3	0. 430	0. 400	0. 437	0. 402	0. 444	0. 416	0. 437	0. 414
I3-3	0. 423	0. 385	0. 430	0. 387	0. 437	0. 402	0. 430	0. 400
I4-3	0. 417	0. 372	0. 423	0. 374	0. 430	0. 387	0. 423	0. 385
I1-4	0. 444	0. 416	0. 451	0. 418	0. 459	0. 434	0. 452	0. 432
I2-4	0. 437	0. 402	0. 444	0. 404	0. 451	0. 418	0. 444	0. 416
I3-4	0. 430	0. 387	0. 436	0. 389	0. 444	0. 404	0. 437	0. 402
I4-4	0. 423	0. 374	0. 429	0. 376	0. 436	0. 389	0. 430	0. 387
I1-5	0. 451	0. 418	0. 460	0. 421	0. 468	0. 436	0. 459	0. 434
I2-5	0. 444	0. 404	0. 452	0. 407	0. 460	0. 421	0. 451	0. 418
I3-5	0. 436	0. 389	0. 444	0. 392	0. 452	0. 407	0. 444	0. 404
I4-5	0. 429	0. 376	0. 436	0. 378	0. 444	0. 392	0. 436	0. 389
J1-1	0. 460	0. 421	0. 466	0. 422	0. 475	0. 437	0. 468	0. 436
J2-1	0. 452	0. 407	0. 458	0. 408	0. 466	0. 422	0. 460	0. 421
J3-1	0. 444	0. 392	0. 449	0. 393	0. 458	0. 408	0. 452	0. 407
J4-1	0. 436	0. 378	0. 441	0. 379	0. 449	0. 393	0. 444	0. 392
J1-2	0. 466	0. 422	0. 475	0. 424	0. 484	0. 439	0. 475	0. 437
J2-2	0. 458	0. 408	0. 467	0. 410	0. 475	0. 424	0. 466	0. 422
J3-2	0. 449	0. 393	0. 458	0. 395	0. 467	0. 410	0. 458	0. 408
J4-2	0. 441	0. 379	0. 449	0. 381	0. 458	0. 395	0. 449	0. 393
J1-3	0. 475	0. 424	0. 483	0. 425	0. 493	0. 440	0. 484	0. 439
J2-3	0. 467	0. 410	0. 475	0. 412	0. 483	0. 425	0. 475	0. 424
J3-3	0. 458	0. 395	0. 465	0. 397	0. 475	0. 412	0. 467	0. 410
J4-3	0. 449	0. 381	0. 456	0. 383	0. 465	0. 397	0. 458	0. 395
J1-4	0. 483	0. 425	0. 493	0. 427	0. 503	0. 442	0. 493	0. 440
J2-4	0. 475	0. 412	0. 484	0. 414	0. 493	0. 427	0. 483	0. 425
J3-4	0. 465	0. 397	0. 474	0. 399	0. 484	0. 414	0. 475	0. 412
J4-4	0. 456	0. 383	0. 465	0. 385	0. 474	0. 399	0. 465	0. 397

Notes:

1. Color coordinates measurement allowance is ± 0.01.
2. One delivery will include up to two consecutive color ranks and three luminous intensity ranks of the products the quantity-ratio of the ranks is decided by Luckylight.

Copyright © 2017 Luckylight All Rights Reserved

Reel Dimensions:

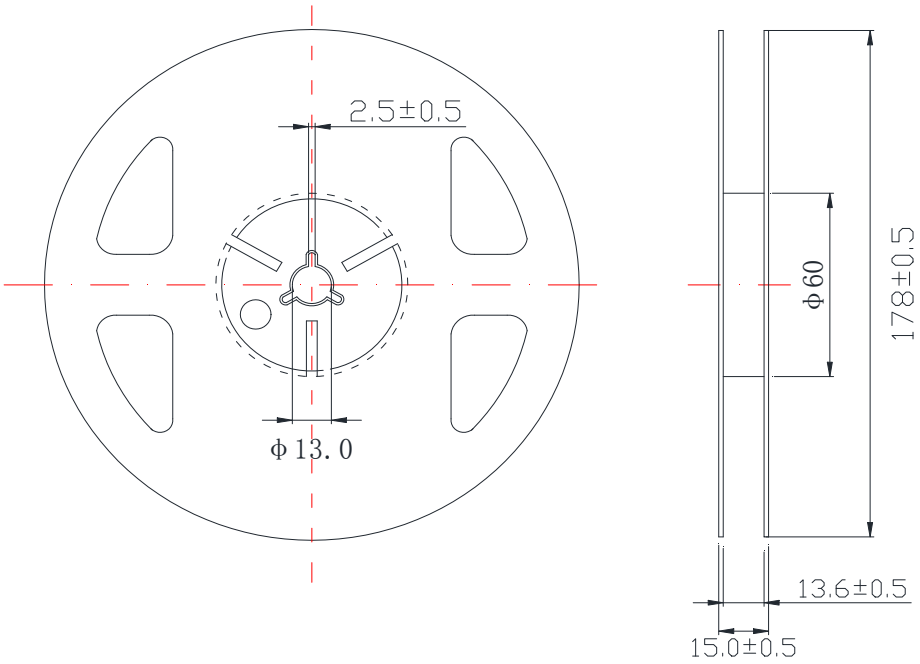

Carrier Tape Dimensions:

Loaded quantity 1000 pcs per reel.

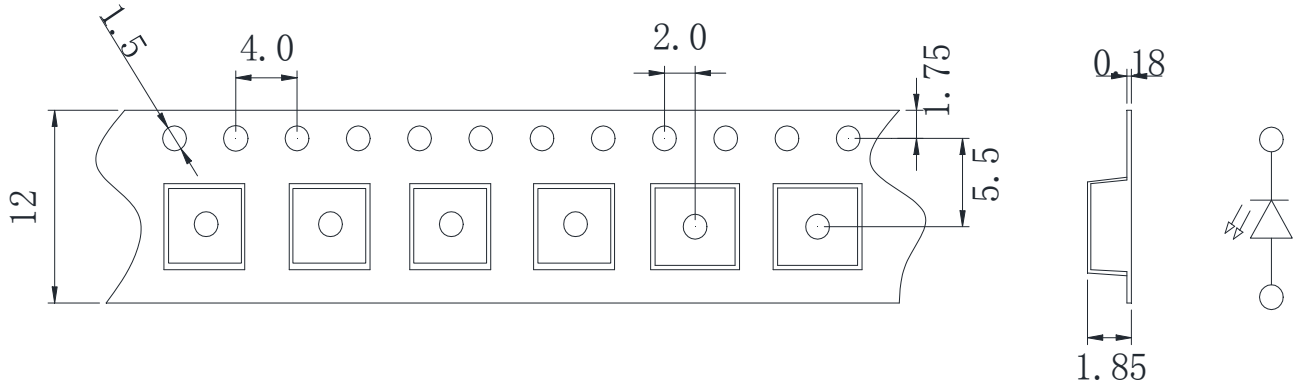

Copyright © 2017 Luckylight All Rights Reserved

Packing & Label Specifications:

Moisture Resistant Packaging:

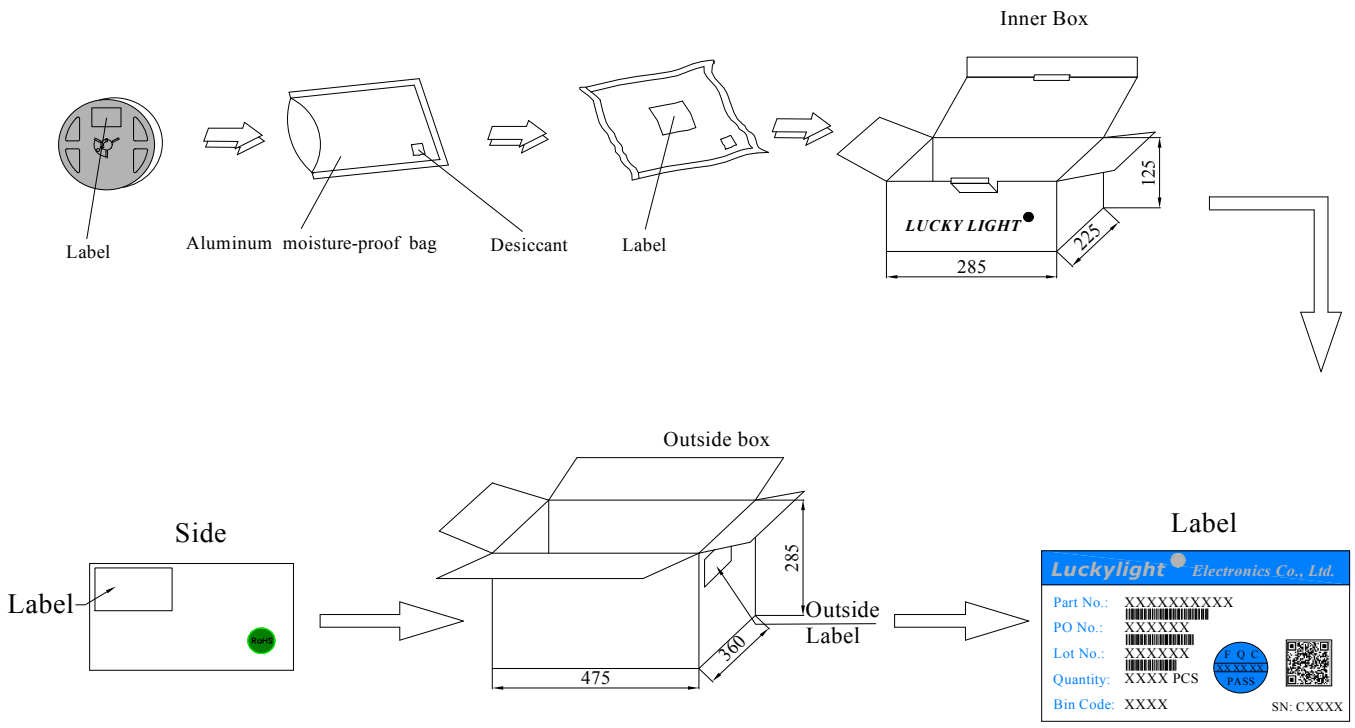

Copyright © 2017 Luckylight All Rights Reserved

CAUTIONS

1. Handling Precautions:

1.1. Handle the component along the side surfaces by using forceps or appropriate tools.
1.2. Do not directly touch or handle the silicone lens surface. It may damage the internal circuitry.
1.3. Do not stack together assembled PCBs containing exposed LEDs. Impact may scratch the silicone lens or damage the internal circuitry.

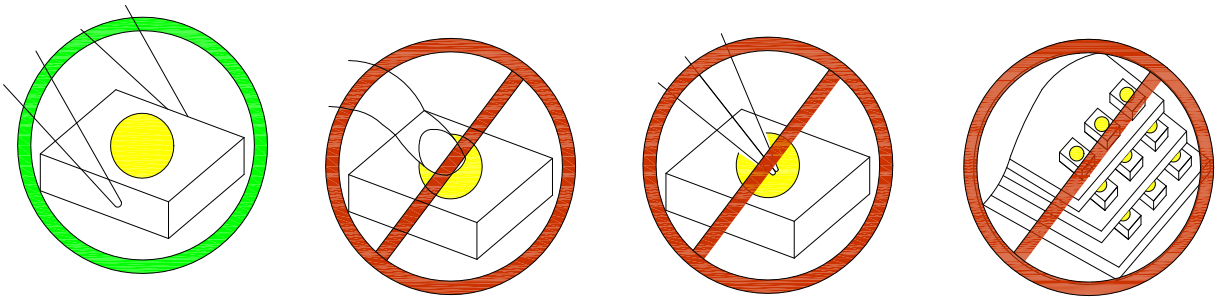

Compare to epoxy encapsulant that is hard and brittle, silicone is softer and flexible. Although its characteristic significantly reduces thermal stress, it is more susceptible to damage by external mechanical force. As a result, special handling precautions need to be observed during assembly using silicone encapsulated LED products. Failure to comply might lead to damage and premature failure of the LED.

2. Storage

2.1. Do not open moisture proof bag before the products are ready to use.
2.2. Before opening the package, the LEDs should be kept at 30°C or less and 60%RH or less.
2.3. The LEDs should be used within a year.
2.4. After opening the package, the LEDs should be kept at 30°C or less and 60%RH or less.
2.5. The LEDs should be used within 24 hours after opening the package.
2.6. If the moisture adsorbent material has fabled away or the LEDs have exceeded the storage time, baking treatment should be performed using the following conditions. Baking treatment: 65±5°C for 24 hours.

Copyright © 2017 Luckylight All Rights Reserved

3. Soldering Condition

3.1. Pb-free solder temperature profile

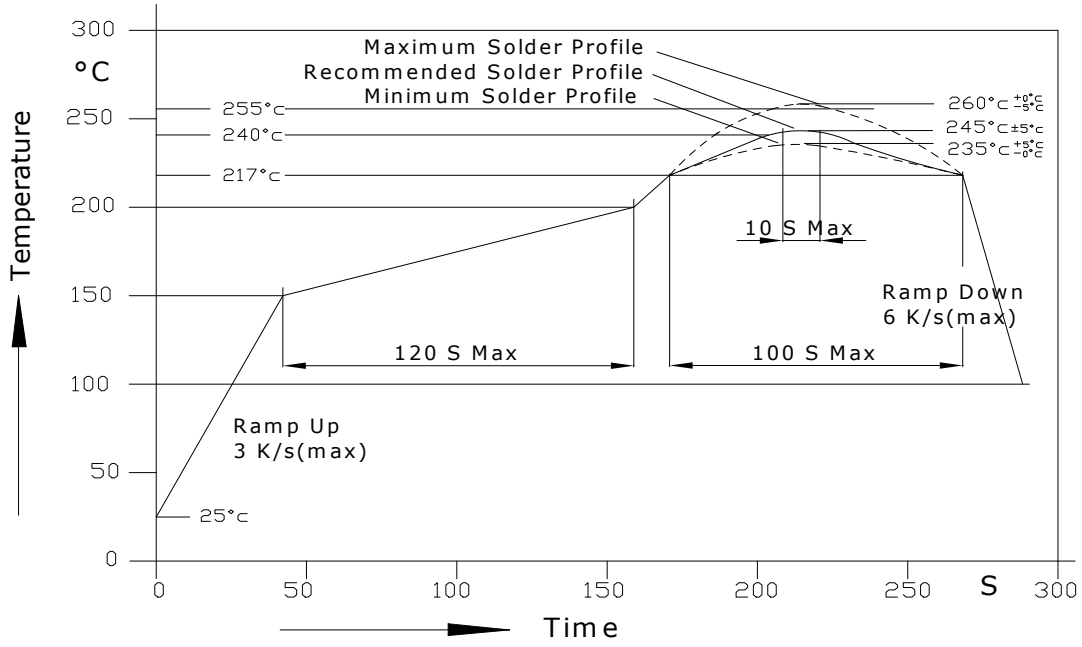

3.2. Reflow soldering should not be done more than two times.
3.3. When soldering, do not put stress on the LEDs during heating.
3.4. After soldering, do not warp the circuit board.
3.5. Recommended soldering conditions:

Reflow soldering		Soldering iron	
Pre-heat	150~200°C	Temperature	300°C Max.
Pre-heat time	120 sec. Max.	Soldering time	3 sec. Max.
Peak temperature	260°C Max.		(one time only)
Soldering time	10 sec. Max.(Max. two times)		

3.6. Because different board designs use different number and types of devices, solder pastes, reflow ovens, and

Copyright © 2017 Luckylight All Rights Reserved

circuit boards, no single temperature profile works for all possible combinations.

However, you can successfully mount your packages to the PCB by following the proper guidelines and PCB-specific characterization.

4. **Drive Method**

4.1. An LED is a current-operated device. In order to ensure intensity uniformity on multiple LEDs connected in parallel in an application, it is recommended that a current limiting resistor be incorporated in the drive circuit, in series with each LED as shown in Circuit A below.

Circuit model A

LED

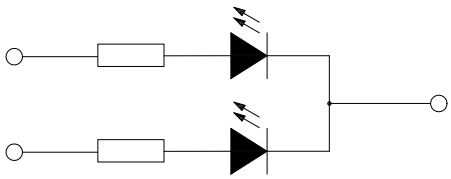

Circuit model B

LED

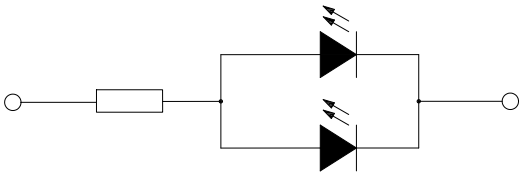

a. Recommended circuit.

b. The brightness of each LED might appear different due to the differences in the I-V characteristics of those LEDs.

5. ESD (Electrostatic Discharge):

Static Electricity or power surge will damage the LED. Suggestions to prevent ESD damage:

- Use of a conductive wrist band or anti-electrostatic glove when handling these LEDs.
- All devices, equipment, and machinery must be properly grounded.
- Work tables, storage racks, etc. should be properly grounded.
- Use ion blower to neutralize the static charge which might have built up on surface of the LED's plastic lens as a result of friction between LEDs during storage and handling.

ESD-damaged LEDs will exhibit abnormal characteristics such as high reverse leakage current, low forward voltage, or "no lightup" at low currents. To verify for ESD damage, check for "lightup" and Vf of the suspect LEDs at low currents. The Vf of "good" LEDs should be >2.0V@0.1mA for InGaN product and >1.4V@0.1mA for AlInGaP product.

Copyright © 2017 Luckylight All Rights Reserved

Terms and conditions for the usage of this document

1. The information included in this document reflects representative usage scenarios and is intended for technical reference only.
2. The part number, type, and specifications mentioned in this document are subject to future change and improvement without notice. Before production usage customer should refer to the latest datasheet for the updated specifications.
3. When using the products referenced in this document, please make sure the product is being operated within the environmental and electrical limits specified in the datasheet. If customer usage exceeds the specified limits, Luckylight will not be responsible for any subsequent issues.
4. The information in this document applies to typical usage in consumer electronics applications. If customer's application has special reliability requirements or have life-threatening liabilities, such as automotive or medical usage, please consult with Luckylight representative for further assistance.
5. The contents and information of this document may not be reproduced or re-transmitted without permission by Luckylight.

Copyright © 2017 Luckylight All Rights Reserved